MODEL S

After April 2016



PARTS CATALOG

The Parts Manual contains three categories of parts: Restricted, Unrestricted, and Over-the-Counter.

Restricted Parts

Restricted parts include structural parts (parts that are bonded, riveted, or welded on the vehicle), and airbag (SRS) and high voltage related parts.
• These parts are indicated in the Parts Manual by the entry “Restricted” in the “Category” column.
• Parts orders for restricted parts require a VIN.
• Restricted parts are never sold directly to customers or third parties, or for unsupported vehicles. Refer to SI-14-00-013, “Disabling Unsupported Vehicles And Enabling Redeemed Vehicles” for more information on Tesla’s policy on unsupported vehicles.
• Restricted parts are only sold to Tesla Approved Body Shops for supported vehicles.

Over-the-Counter Parts

Over-the-counter parts include common wear items, such as wiper blades or brake pads.
• These parts are indicated in the Parts Manual by the entry “OTC” in the “Category” column.
• Parts orders for over-the-counter parts do not require a VIN.
• Over-the-counter parts can be sold to anyone, including customers and third parties.

Unrestricted Parts

Unrestricted parts are any parts that aren’t restricted or classified as over-the-counter.
• These parts are indicated in the Parts Manual by the entry “Unrestricted” in the “Category” column.
• Parts orders for unrestricted parts require a VIN.
• Unrestricted parts are never sold to anyone for unsupported vehicles.
• Unrestricted parts can be sold to customers and third parties for supported vehicles.

Symbol	Meaning
*	Not illustrated
**	As needed

Tip: For ease of reference, the sections and subsections of this Parts Catalog, the FRT Manual, and the Service Manual are nearly identical.
Note: The quantity stated for a part is the number of times that the part is used within that specific section or subsection.

BATTERY ASSEMBLY

High Voltage Battery Assembly

KWH	Model S Legacy RWD (** → March 2016)		Model S Legacy DM Small - Small (** → March 2016)		Model S Legacy DM Small - Large (P-D) Non ludicrous (** → March 2016)		Model S Legacy Ludicrous (** → March 2016)		Model S RWD (April 2016 → **)		Model S & X Dual Motor Small - Small (April 2016 → **)		Model S & X DM Small - Large (P-D) Non ludicrous (April 2016 → **)		Model S & X Ludicrous	
	HWID	PN	HWID	PN	HWID	PN	HWID	PN	HWID	PN	HWID	PN	HWID	PN	HWID	PN
40, 60	27	1024422-00-A, 1024422-00-B, 1039594-00-A, 1025274-00-A, 1120019-XX-A	NA													
	39	1024422-00-B, 1025274-00-B, 1024422-00-C, 1120019-XX-B, 1039594-00-C, 1120019-XX-C														
	42	1026600-00-B, 1037114-00-B, 1120019-XX-B, 1024422-00-D, 1039594-00-D, 1120019-XX-D														
	50	1058971-00-A, 1067097-00-A, 1067097-00-B, 1058971-00-B														
70	61	1067097-00-A, 1067097-00-B, 1058971-00-B, 1058893-00-C, 1055893-00-D														
	65	1055893-00-D, 1055893-00-E, 1069504-00-E, 1069504-00-C, 1069504-00-C, 1074892-00-A (some packs have HWID 67 instead of 65)														
	67	1058893-00-D may have HWID 67 instead of 65)														
75	N A		N A													
85	24	1014114-00-A, 1038596-0X-A, 1088815-0X-A	46	1055519-00-B, 1088935-0X-B, 1066399-0X-B, 1055519-00-A	64	1064362-00-A, 1076318-00-C, 1076319-00-A, 1055519-00-A	NA									
	31	1014114-00-B, 1025273-0X-B, 1088815-0X-B	49	1014114-00-F, 1088815-0X-F	69	1055519-00-B upgraded to ludicrous										
	41	1014114-00-D, 1014114-00-E, 1088815-0X-D, 1025273-0X-D, 1038596-0X-D, 1088815-0X-E	57	1031043-00-E, 1088934-0X-E, 1057472-0X-E, 1057472-01-E	70	1031043-00-E upgraded to ludicrous	1031043-00-E upgraded to ludicrous	70								
	49	1014114-00-F, 1088815-0X-F	60	1055835-00-C, 1055835-00-D, 1067886-0X-C	46	1064362-00-A, 1076318-00-C, 1076319-00-A, 1055519-00-A	1055519-00-B, 1088935-0X-B, 1066399-0X-B, 1055519-00-A	86	1107172-00-A							
	46 base	1074978-00-A	46 base	1074978-00-A	64	1064362-00-A, 1076318-00-C, 1076319-00-A, 1055519-00-A	NA									
	46	1064362-00-A, 1076318-00-C, 1076319-00-A, 1055519-00-A	57	1031043-00-E, 1088934-0X-E, 1057472-0X-E, 1057472-01-E	70	1031043-00-E upgraded to ludicrous	1031043-00-E, 1088934-0X-E, 1057472-0X-E, 1057472-01-E	70								
	57	1031043-00-E, 1088934-0X-E, 1057472-0X-E, 1057472-01-E	60	1055835-00-C, 1055835-00-D, 1067886-0X-C	46	1064362-00-A, 1076318-00-C, 1076319-00-A, 1055519-00-A	1055835-00-C, 1055835-00-D, 1067886-0X-C	60	1107172-00-A							
	57 base	1074980-00-E	57 base	1074980-00-E												
	60	1055835-00-C, 1055835-00-D, 1067886-0X-C	70	1031043-00-E upgraded to ludicrous	86	1107172-00-A										
	64 base	1069777-0X-A	85	1107172-00-A												
	70 base	1031043-00-E upgraded to ludicrous	69	1055519-00-B upgraded to ludicrous	60	1055835-00-C, 1055835-00-D, 1067886-0X-C										
	69	1055519-00-B upgraded to ludicrous	69base	PN TBD	85	1107172-00-A										
	64	1064362-00-A, 1076318-00-C, 1076319-00-A, 1055519-00-A	64base	1069777-0X-A	86base	1121235-0X-A										
	46	1064362-00-A, 1076318-00-C, 1076319-00-A, 1055519-00-A	70base	PN TBD												
	64base	1069777-0X-A	85	1107172-00-A												
	69base	PN TBD	86base	1121235-0X-A												
	70base	PN TBD														
	86	1107172-00-A														
	86base	1121235-0X-A														
90	68	1056776-00-C (t)	68	1056776-00-C (t)	71	1071394-00-A	71	1071394-00-A	60 and 70kwh are 75kwh HV batteries software limited. See 75kwh rows		60 and 70kwh are 75kwh HV batteries software limited. See 75kwh rows		N A		N A	
	71	1071394-00-A	73	1056776-00-E (t)	73	1056776-00-E (t)	73	1056776-00-E (t)								
	73	1056776-00-E (t)	76	1084558-00-A (t)	76	1084558-00-A (t)	76	1084558-00-A (t)								
	76	1084558-00-A (t)	81	1088790-00-A (t)	81	1088790-00-A (t)	81	1088790-00-A (t)								
	81	1088790-00-A (t)	75	1071941-00-C (t)	75	1071941-00-C (t)	75	1071941-00-C (t)								
	75	1071941-00-C (t)	77	1084560-00-A (t)	77	1084560-00-A (t)	77	1084560-00-A (t)								
	77	1084560-00-A (t)	82	1088792-00-A (t)	82	1088792-00-A (t)	82	1088792-00-A (t)								
	82	1088792-00-A (t)	83	1091269-00-A (t)	83	1091269-00-A (t)	83	1091269-00-A (t)								
	83	1091269-00-A (t)	85	1101078-00-A, 1106361-0X-A	85	1101078-00-A, 1106361-0X-A	85	1101078-00-A, 1106361-0X-A								
	85	1101078-00-A, 1106361-0X-A														
	68base	1069582-0X-(t)														
	71base	1089737-0X-A														
	75base	1104028-0X-C														
	81base	1102980-0X-A														
	82base	1102982-0X-A														
	73base	1069582-0X-E (t)														
	N A		N A		N A		N A									
100	73	1056776-00-E	73	1056776-00-E	73	1056776-00-E	73	1056776-00-E								
	76	1084558-00-A	76	1084558-00-A	76	1084558-00-A	76	1084558-00-A								
	81	1088790-00-A	81	1088790-00-A	81	1088790-00-A	81	1088790-00-A								
	75	1071941-00-C	75	1071941-00-C	75	1071941-00-C	75	1071941-00-C								
	77	1084560-00-A	77	1084560-00-A	77	1084560-00-A	77	1084560-00-A								
	82	1088792-00-A	82	1088792-00-A	82	1088792-00-A	82	1088792-00-A								
	83	1091269-00-A	83	1091269-00-A	83	1091269-00-A	83	1091269-00-A								
	75base	1104028-0X-C	85	1101078-00-A, 1106361-0X-A	85	1101078-00-A, 1106361-0X-A	85	1101078-00-A, 1106361-0X-A								
	81base	1102980-0X-A														
	85	1101078-00-A, 1106361-0X-A														
	82base	1102982-0X-A														
	73base	1069582-0X-E														
	N A		N A		N A		N A									
100	79	1056755-00-C	79	1056755-00-C	79	1056755-00-C	79	1056755-00-C								

(t): The battery pack top ring must be replaced with a short top ring (1041311-00-C) for this application. Six screws (1042040-00-A) are used to attach the top ring.

No	Part Name	Category	Part Description	Part Number	Qty	Comments
1	ASY-HV BATTERY,100KWH,SX	Unrestricted	HIGH VOLTAGE BATTERY ASSEMBLY - 2.0 - MODEL S/X, 100KWH	1086755-00-C	1	
1	ASY-HV BATTERY,100KWH,SX	Unrestricted	HIGH VOLTAGE BATTERY ASSEMBLY - 2.0 - MODEL S/X, 100KWH	1086755-00-C	1	
1	ASY-HV BATTERY,100KWH,SX	Unrestricted	HIGH VOLTAGE BATTERY ASSEMBLY - 2.0 - MODEL S/X, 100KWH	1086755-00-C	1	
1	ASY,HV BATT,90KWH,MDLS	Unrestricted	HIGH VOLTAGE BATTERY ASSEMBLY - 2.0 - MODEL S, 90KWH	1056776-00-E	1	For vehicles built between April 11, 2016 and May 31, 2016 with option codes: BTX4 AND MI01 AND BP00. OK to use REMAN part 1069582-0X-E. Do not use on vehicles built before April 11, 2016.
1	ASY,HV BATT,90KWH,MDLS	Unrestricted	HIGH VOLTAGE BATTERY ASSEMBLY - 2.0 - MODEL S, 90KWH	1056776-00-E	1	For vehicles built between April 11, 2016 and May 31, 2016 with option codes: BTX4 AND MI01 AND BP00. OK to use REMAN part 1069582-0X-E. Do not use on vehicles built before April 11, 2016.
1	ASY,HV BATT,90KWH,MDLS	Unrestricted	HIGH VOLTAGE BATTERY ASSEMBLY - 2.0 - MODEL S, 90KWH	1056776-00-E	1	For vehicles built between April 11, 2016 and May 31, 2016 with option codes: BTX4 AND MI01 AND BP00. OK to use REMAN part 1069582-0X-E. Do not use on vehicles built before April 11, 2016.
1	ASY,HV BATT,90KWH,MDLS	Unrestricted	HIGH VOLTAGE BATTERY ASSEMBLY - 2.0 - MODEL S, 90KWH	1088790-00-A	1	For vehicles built on or after June 1, 2016 with option codes: BTX4 AND BP00.
1	ASY,HV BATT,90KWH,MDLS	Unrestricted	HIGH VOLTAGE BATTERY ASSEMBLY - 2.0 - MODEL S, 90KWH	1088790-00-A	1	For vehicles built on or after June 1, 2016 with option codes: BTX4 AND BP00.
1	ASY,HV BATT,90KWH,MDLS	Unrestricted	HIGH VOLTAGE BATTERY ASSEMBLY - 2.0 - MODEL S, 90KWH	1088790-00-A	1	For vehicles built on or after June 1, 2016 with option codes: BTX4 AND BP00.
1	ASY,HV BATT,90KWH,MDLS	Unrestricted	HIGH VOLTAGE BATTERY ASSEMBLY - 2.0 - MODEL S - LUDICROUS, 90KWH	1071941-00-C	1	For vehicles built between April 11, 2016 and May 31, 2016 with option codes: BTX4 AND MI01 AND BP01. Replace only with 1071941-00-C. Do not use on vehicles built before April 11, 2016.
1	ASY,HV BATT,90KWH,MDLS	Unrestricted	HIGH VOLTAGE BATTERY ASSEMBLY - 2.0 - MODEL S - LUDICROUS, 90KWH	1071941-00-C	1	For vehicles built between April 11, 2016 and May 31, 2016 with option codes: BTX4 AND MI01 AND BP01. Replace only with 1071941-00-C. Do not use on vehicles built before April 11, 2016.
1	ASY,HV BATT,90KWH,MDLS	Unrestricted	HIGH VOLTAGE BATTERY ASSEMBLY - 2.0 - MODEL S - LUDICROUS, 90KWH	1071941-00-C	1	For vehicles built between April 11, 2016 and May 31, 2016 with option codes: BTX4 AND MI01 AND BP01. Replace only with 1071941-00-C. Do not use on vehicles built before April 11, 2016.
1	ASY,HV BATT,90KWH,MDLS	Unrestricted	HIGH VOLTAGE BATTERY ASSEMBLY - 2.0 - MODEL S - LUDICROUS, 90KWH	1088792-00-A	1	For vehicles built on or after June 1, 2016 with option codes: BTX4 AND BP01.
1	ASY,HV BATT,90KWH,MDLS	Unrestricted	HIGH VOLTAGE BATTERY ASSEMBLY - 2.0 - MODEL S - LUDICROUS, 90KWH	1088792-00-A	1	For vehicles built on or after June 1, 2016 with option codes: BTX4 AND BP01.
1	ASY,HV BATT,90KWH,MDLS	Unrestricted	HIGH VOLTAGE BATTERY ASSEMBLY - 2.0 - MODEL S - LUDICROUS, 90KWH	1088792-00-A	1	For vehicles built on or after June 1, 2016 with option codes: BTX4 AND BP01.
1	ASY,HV BATTERY,70KWH,MDLS	Unrestricted	HIGH VOLTAGE BATTERY ASSEMBLY - 2.0 - MODEL S, 70KWH	1069867-00-A	1	For vehicles built on or after April 11, 2016 with option codes: MI01 AND BT70.
1	ASY,HV BATTERY,70KWH,MDLS	Unrestricted	HIGH VOLTAGE BATTERY ASSEMBLY - 2.0 - MODEL S, 70KWH	1069867-00-A	1	For vehicles built on or after April 11, 2016 with option codes: MI01 AND BT70.
1	ASY,HV BATTERY,70KWH,MDLS	Unrestricted	HIGH VOLTAGE BATTERY ASSEMBLY - 2.0 - MODEL S, 70KWH	1069867-00-A	1	For vehicles built on or after April 11, 2016 with option codes: MI01 AND BT70.
1	ASY,HV BATTERY,75KWH,MDLS	Unrestricted	HIGH VOLTAGE BATTERY ASSEMBLY - 2.0 - MODEL S, 75KWH	1072923-00-A	1	For vehicles built on or after April 11, 2016 with option codes: BTX5 AND MI01. OK to use REMAN part 1091682-0X-A. Do not use on vehicles with option code MI00.
1	ASY,HV BATTERY,75KWH,MDLS	Unrestricted	HIGH VOLTAGE BATTERY ASSEMBLY - 2.0 - MODEL S, 75KWH	1072923-00-A	1	For vehicles built on or after April 11, 2016 with option codes: BTX5 AND MI01. OK to use REMAN part 1091682-0X-A. Do not use on vehicles with option code MI00.
1	ASY,HV BATTERY,75KWH,MDLS	Unrestricted	HIGH VOLTAGE BATTERY ASSEMBLY - 2.0 - MODEL S, 75KWH	1072923-00-A	1	For vehicles built on or after April 11, 2016 with option codes: BTX5 AND MI01. OK to use REMAN part 1091682-0X-A. Do not use on vehicles with option code MI00.
3	Cover, Fuse Top Panel	Unrestricted	FUSE TOP PANEL COVER	6010488-00-C	1	
3	Cover, Fuse Top Panel	Unrestricted	FUSE TOP PANEL COVER	6010488-00-C	1	
3	Cover, Fuse Top Panel	Unrestricted	FUSE TOP PANEL COVER	6010488-00-C	1	
4	SCR,M4-0.7x14.5,TAMPR,TRX,STL,ZnNi,PATCH	Unrestricted	SCREW, M4-0.7x14.5, TAMPERPROOF, TORX, STEEL, ZINC NICKEL WITH PATCH	1006009-00-B	13	Ok to use B or newer. Fuse panel and coolant rapidmate
4	SCR,M4-0.7x14.5,TAMPR,TRX,STL,ZnNi,PATCH	Unrestricted	SCREW, M4-0.7x14.5, TAMPERPROOF, TORX, STEEL, ZINC NICKEL WITH PATCH	1006009-00-B	13	Ok to use B or newer. Fuse panel and coolant rapidmate
4	SCR,M4-0.7x14.5,TAMPR,TRX,STL,ZnNi,PATCH	Unrestricted	SCREW, M4-0.7x14.5, TAMPERPROOF, TORX, STEEL, ZINC NICKEL WITH PATCH	1006009-00-B	13	Ok to use B or newer. Fuse panel and coolant rapidmate
*	PLUG,SIDE RAIL,MDLS,FRONT,RIGHT,1.5	Unrestricted	SIDE RAIL END CAP - FRONT LEFT - FOR 1.5 AND 2.0 BATTERY ENCLOSURES	1039595-00-B	2	

*	PLUG,SIDE RAIL,MDLS,FRONT,RIGHT,1.5	Unrestricted	SIDE RAIL END CAP - FRONT LEFT - FOR 1.5 AND 2.0 BATTERY ENCLOSURES	1039595-00-B	2	
*	PLUG,SIDE RAIL,MDLS,FRONT,RIGHT,1.5	Unrestricted	SIDE RAIL END CAP - FRONT LEFT - FOR 1.5 AND 2.0 BATTERY ENCLOSURES	1039595-00-B	2	
*	PLUG,SIDE RAIL,MDLS,REAR,RIGHT,1.5	Unrestricted	SIDE RAIL END CAP - REAR LEFT FOR 1.5 BATTERY ENCLOSURES	1039684-00-B	1	
*	PLUG,SIDE RAIL,MDLS,REAR,RIGHT,1.5	Unrestricted	SIDE RAIL END CAP - REAR LEFT FOR 1.5 BATTERY ENCLOSURES	1039684-00-B	1	
*	PLUG,SIDE RAIL,MDLS,REAR,RIGHT,1.5	Unrestricted	SIDE RAIL END CAP - REAR LEFT FOR 1.5 BATTERY ENCLOSURES	1039684-00-B	1	
*	PLUG,SIDE RAIL,MDLS,FRONT,RIGHT,1.5	Unrestricted	SIDE RAIL END CAP - FRONT RIGHT - FOR 1.5 AND 2.0 BATTERY ENCLOSURES	1039642-00-B	2	
*	PLUG,SIDE RAIL,MDLS,FRONT,RIGHT,1.5	Unrestricted	SIDE RAIL END CAP - FRONT RIGHT - FOR 1.5 AND 2.0 BATTERY ENCLOSURES	1039642-00-B	2	
*	PLUG,SIDE RAIL,MDLS,FRONT,RIGHT,1.5	Unrestricted	SIDE RAIL END CAP - FRONT RIGHT - FOR 1.5 AND 2.0 BATTERY ENCLOSURES	1039642-00-B	2	
*	ASY,SKI,SIDE RAIL,ECOAT,ENCLOS	Unrestricted	SIDE RAIL SKI ENCLOSURE ASSEMBLY	1096346-01-A	1	
*	ASY,SKI,SIDE RAIL,ECOAT,ENCLOS	Unrestricted	SIDE RAIL SKI ENCLOSURE ASSEMBLY	1096346-01-A	1	
*	ASY,SKI,SIDE RAIL,ECOAT,ENCLOS	Unrestricted	SIDE RAIL SKI ENCLOSURE ASSEMBLY	1096346-01-A	1	
*	ASY,SKI,SIDE RAIL,ECOAT,ENCLOS	Unrestricted	SIDE RAIL SKI ENCLOSURE ASSEMBLY	1057051-01-A	1	Universal side rail
*	ASY,SKI,SIDE RAIL,ECOAT,ENCLOS	Unrestricted	SIDE RAIL SKI ENCLOSURE ASSEMBLY	1057051-01-A	1	Universal side rail
*	ASY,SKI,SIDE RAIL,ECOAT,ENCLOS	Unrestricted	SIDE RAIL SKI ENCLOSURE ASSEMBLY	1057051-01-A	1	Universal side rail
*	RIVNUT,M6x1,WEDGEHEAD,2-5mm GRP,STL,ZnN	Unrestricted	RIVNUT,M6x1,WEDGEHEAD,2-5mm GRP,STL,ZnN	1038174-00-A	1	Used for Side Ski mounting. Good for 1.0, 1.5 and 2.0 packs
*	RIVNUT,M6x1,WEDGEHEAD,2-5mm GRP,STL,ZnN	Unrestricted	RIVNUT,M6x1,WEDGEHEAD,2-5mm GRP,STL,ZnN	1038174-00-A	1	Used for Side Ski mounting. Good for 1.0, 1.5 and 2.0 packs
*	RIVNUT,M6x1,WEDGEHEAD,2-5mm GRP,STL,ZnN	Unrestricted	RIVNUT,M6x1,WEDGEHEAD,2-5mm GRP,STL,ZnN	1038174-00-A	1	Used for Side Ski mounting. Good for 1.0, 1.5 and 2.0 packs
*	ASY,VENTS,GANGED,HVBATT	Unrestricted	VENT ASSEMBLY WITH UMBRELLAS AND O-RINGS	1054531-00-A	84	
*	ASY,VENTS,GANGED,HVBATT	Unrestricted	VENT ASSEMBLY WITH UMBRELLAS AND O-RINGS	1054531-00-A	84	
*	ASY,VENTS,GANGED,HVBATT	Unrestricted	VENT ASSEMBLY WITH UMBRELLAS AND O-RINGS	1054531-00-A	84	
*	SEAL,HV BATTERY,SPLASH CASTING WIPER	Unrestricted	HIGH VOLTAGE BATTERY SPLASH CASTING WIPER SEAL	1012560-00-A	2	Seal on the curved edge of the battery next to front stack.
*	SEAL,HV BATTERY,SPLASH CASTING WIPER	Unrestricted	HIGH VOLTAGE BATTERY SPLASH CASTING WIPER SEAL	1012560-00-A	2	Seal on the curved edge of the battery next to front stack.
*	SEAL,HV BATTERY,SPLASH CASTING WIPER	Unrestricted	HIGH VOLTAGE BATTERY SPLASH CASTING WIPER SEAL	1012560-00-A	2	Seal on the curved edge of the battery next to front stack.
*	ASY,SLEEVE,ENCLOSURE 2.0,MDLS	Unrestricted	ALUMINUM ENCLOSURE SLEEVE ASSEMBLY	1014204-00-F	10	For 2.0 enclosure packs. Left hand thread.
*	ASY,SLEEVE,ENCLOSURE 2.0,MDLS	Unrestricted	ALUMINUM ENCLOSURE SLEEVE ASSEMBLY	1014204-00-F	10	For 2.0 enclosure packs. Left hand thread.
*	ASY,SLEEVE,ENCLOSURE 2.0,MDLS	Unrestricted	ALUMINUM ENCLOSURE SLEEVE ASSEMBLY	1014204-00-F	10	For 2.0 enclosure packs. Left hand thread.
*	ASY,FASTENER,PACK SPACER,SHORT HEAD,MDLS	Unrestricted	SHORT HEAD PACK SPACER FASTENER ASSEMBLY	1018551-00-C	4	For 2.0 enclosure packs. Left hand thread.
*	ASY,FASTENER,PACK SPACER,SHORT HEAD,MDLS	Unrestricted	SHORT HEAD PACK SPACER FASTENER ASSEMBLY	1018551-00-C	4	For 2.0 enclosure packs. Left hand thread.
*	ASY,FASTENER,PACK SPACER,SHORT HEAD,MDLS	Unrestricted	SHORT HEAD PACK SPACER FASTENER ASSEMBLY	1018551-00-C	4	For 2.0 enclosure packs. Left hand thread.
*	ASY,FASTENER,PACK SPACER,TALL HEAD,MDLS	Unrestricted	TALL HEAD PACK SPACER FASTENER ASSEMBLY	1018552-00-C	8	For 2.0 enclosure packs. Left hand thread.
*	ASY,FASTENER,PACK SPACER,TALL HEAD,MDLS	Unrestricted	TALL HEAD PACK SPACER FASTENER ASSEMBLY	1018552-00-C	8	For 2.0 enclosure packs. Left hand thread.
*	ASY,FASTENER,PACK SPACER,TALL HEAD,MDLS	Unrestricted	TALL HEAD PACK SPACER FASTENER ASSEMBLY	1018552-00-C	8	For 2.0 enclosure packs. Left hand thread.
*	FIELD CONTACTOR KIT W/O FUSE PACK 1.0 1.5	Unrestricted	FIELD CONTACTOR KIT W/O FUSE PACK 1.0 1.5	1084515-00-B	1	OK to use 1084515-00-A. Does not include bus bars or fuse.
*	FIELD CONTACTOR KIT W/O FUSE PACK 1.0 1.5	Unrestricted	FIELD CONTACTOR KIT W/O FUSE PACK 1.0 1.5	1084515-00-B	1	OK to use 1084515-00-A. Does not include bus bars or fuse.
*	FIELD CONTACTOR KIT W/O FUSE PACK 1.0 1.5	Unrestricted	FIELD CONTACTOR KIT W/O FUSE PACK 1.0 1.5	1084515-00-B	1	OK to use 1084515-00-A. Does not include bus bars or fuse.
*	FIELD KIT PYRO FUSE PACK 1.0 1.5	Unrestricted	FIELD KIT PYRO FUSE PACK 1.0 1.5	1089619-00-B	1	OK to use 1089619-00-A
*	FIELD KIT PYRO FUSE PACK 1.0 1.5	Unrestricted	FIELD KIT PYRO FUSE PACK 1.0 1.5	1089619-00-B	1	OK to use 1089619-00-A
*	FIELD KIT PYRO FUSE PACK 1.0 1.5	Unrestricted	FIELD KIT PYRO FUSE PACK 1.0 1.5	1089619-00-B	1	OK to use 1089619-00-A
*	FIELD CONTACTOR KIT W/O FUSE PACK 2.0	Unrestricted	FIELD CONTACTOR KIT W/O FUSE PACK 2.0	1089626-00-A	1	Does not include bus bars or fuse.
*	FIELD CONTACTOR KIT W/O FUSE PACK 2.0	Unrestricted	FIELD CONTACTOR KIT W/O FUSE PACK 2.0	1089626-00-A	1	Does not include bus bars or fuse.
*	FIELD CONTACTOR KIT W/O FUSE PACK 2.0	Unrestricted	FIELD CONTACTOR KIT W/O FUSE PACK 2.0	1089626-00-A	1	Does not include bus bars or fuse.
*	FIELD KIT PYRO FUSE PACK 2.0	Unrestricted	FIELD KIT PYRO FUSE PACK 2.0	1084549-00-B	1	OK to use 1084549-00-A

*	FIELD KIT PYRO FUSE PACK 2.0	Unrestricted	FIELD KIT PYRO FUSE PACK 2.0	1084549-00-B	1	OK to use 1084549-00-A
*	FIELD KIT PYRO FUSE PACK 2.0	Unrestricted	FIELD KIT PYRO FUSE PACK 2.0	1084549-00-B	1	OK to use 1084549-00-A
*	FIELD KIT PYRO FUSE 100KWH PACK 2.0	Unrestricted	FIELD KIT PYRO FUSE 100KWH PACK 2.0	1107227-00-A	1	
*	FIELD KIT PYRO FUSE 100KWH PACK 2.0	Unrestricted	FIELD KIT PYRO FUSE 100KWH PACK 2.0	1107227-00-A	1	
*	FIELD KIT PYRO FUSE 100KWH PACK 2.0	Unrestricted	FIELD KIT PYRO FUSE 100KWH PACK 2.0	1107227-00-A	1	
*	FIELD KIT PYRO FUSE 100KWH PACK 2.0	Unrestricted	FIELD KIT PYRO FUSE 100KWH PACK 2.0	1107227-00-A	1	OK to use pyro fuse 1086649-00-A instead of -00-B on kit
*	FIELD KIT PYRO FUSE 100KWH PACK 2.0	Unrestricted	FIELD KIT PYRO FUSE 100KWH PACK 2.0	1107227-00-A	1	OK to use pyro fuse 1086649-00-A instead of -00-B on kit
*	FIELD KIT PYRO FUSE 100KWH PACK 2.0	Unrestricted	FIELD KIT PYRO FUSE 100KWH PACK 2.0	1107227-00-A	1	OK to use pyro fuse 1086649-00-A instead of -00-B on kit
*	FIELD KIT,LUDICROUS UPGRADE, PACK 2.0	Unrestricted	FIELD KIT,LUDICROUS UPGRADE, PACK 2.0	1089621-00-B	1	includes bus bars and fuse
*	FIELD KIT,LUDICROUS UPGRADE, PACK 2.0	Unrestricted	FIELD KIT,LUDICROUS UPGRADE, PACK 2.0	1089621-00-B	1	includes bus bars and fuse
*	FIELD KIT,LUDICROUS UPGRADE, PACK 2.0	Unrestricted	FIELD KIT,LUDICROUS UPGRADE, PACK 2.0	1089621-00-B	1	includes bus bars and fuse
*	FIELD KIT,LUDICROUS UPGRADE, NO SHUNT	Unrestricted	FIELD KIT,LUDICROUS UPGRADE, NO SHUNT	1079674-00-D	1	includes bus bars and fuse
*	FIELD KIT,LUDICROUS UPGRADE, NO SHUNT	Unrestricted	FIELD KIT,LUDICROUS UPGRADE, NO SHUNT	1079674-00-D	1	includes bus bars and fuse
*	FIELD KIT,LUDICROUS UPGRADE, NO SHUNT	Unrestricted	FIELD KIT,LUDICROUS UPGRADE, NO SHUNT	1079674-00-D	1	includes bus bars and fuse
*	LABEL,DISCHARGE ACCESS,HV BATTERY	Unrestricted	LABEL,DISCHARGE ACCESS,HV BATTERY	1018056-00-C	1	
*	LABEL,DISCHARGE ACCESS,HV BATTERY	Unrestricted	LABEL,DISCHARGE ACCESS,HV BATTERY	1018056-00-C	1	
*	LABEL,DISCHARGE ACCESS,HV BATTERY	Unrestricted	LABEL,DISCHARGE ACCESS,HV BATTERY	1018056-00-C	1	
*	PCBA,BMS,WITH STANDBY CONN,S2,MDL S/X	Unrestricted	PCBA,BMS,WITH STANDBY CONN,S2,MDL S/X	1047340-02-E	1	BMS S2, 5 HVIL Nodes. OK to use 1047340-02-C.
*	PCBA,BMS,WITH STANDBY CONN,S2,MDL S/X	Unrestricted	PCBA,BMS,WITH STANDBY CONN,S2,MDL S/X	1047340-02-E	1	BMS S2, 5 HVIL Nodes. OK to use 1047340-02-C.
*	PCBA,BMS,WITH STANDBY CONN,S2,MDL S/X	Unrestricted	PCBA,BMS,WITH STANDBY CONN,S2,MDL S/X	1047340-02-E	1	BMS S2, 5 HVIL Nodes. OK to use 1047340-02-C.
*	PCBA,BMS,WITH STANDBY CONN,S3,MDL S/X	Unrestricted	PCBA,BMS,WITH STANDBY CONN,S3,MDL S/X	1047340-01-E	1	BMS S3, 5 HVIL Nodes. OK to use 1047340-01-C.
*	PCBA,BMS,WITH STANDBY CONN,S3,MDL S/X	Unrestricted	PCBA,BMS,WITH STANDBY CONN,S3,MDL S/X	1047340-01-E	1	BMS S3, 5 HVIL Nodes. OK to use 1047340-01-C.
*	PCBA,BMS,WITH STANDBY CONN,S3,MDL S/X	Unrestricted	PCBA,BMS,WITH STANDBY CONN,S3,MDL S/X	1047340-01-E	1	BMS S3, 5 HVIL Nodes. OK to use 1047340-01-C.
*	PCBA,BMS,WITH STANDBY CONN,S3,MDL S/X	Unrestricted	PCBA,BMS,WITH STANDBY CONN,S3,MDL S/X	1047340-01-E	1	BMS S3, 5 HVIL Nodes. OK to use 1047340-01-C.
*	SCR,M4-0.7X6,PH,STL 9.8,ZN,PTCH,EXT L/W	Unrestricted	SCR,M4-0.7X6,PH,STL 9.8,ZN,PTCH,EXT L/W	1004402-00-B	8	use for BMS mounting
*	SCR,M4-0.7X6,PH,STL 9.8,ZN,PTCH,EXT L/W	Unrestricted	SCR,M4-0.7X6,PH,STL 9.8,ZN,PTCH,EXT L/W	1004402-00-B	8	use for BMS mounting
*	SCR,M4-0.7X6,PH,STL 9.8,ZN,PTCH,EXT L/W	Unrestricted	SCR,M4-0.7X6,PH,STL 9.8,ZN,PTCH,EXT L/W	1004402-00-B	8	use for BMS mounting
*	FASTENER, BOLT, TORX25, M5-0.8X8MM	Unrestricted	FASTENER, BOLT, TORX25, M5-0.8X8MM	1009129-00-A	2	use for mounting BMS cable guide
*	FASTENER, BOLT, TORX25, M5-0.8X8MM	Unrestricted	FASTENER, BOLT, TORX25, M5-0.8X8MM	1009129-00-A	2	use for mounting BMS cable guide
*	FASTENER, BOLT, TORX25, M5-0.8X8MM	Unrestricted	FASTENER, BOLT, TORX25, M5-0.8X8MM	1009129-00-A	2	use for mounting BMS cable guide
*	FIELD RAPIDMATE SEAL, FIELD REPAIR KIT	Unrestricted	FIELD RAPIDMATE SEAL, FIELD REPAIR KIT	1130298-00-A	1	Use in "rapidmate seal only replacement" procedure
*	FIELD RAPIDMATE SEAL, FIELD REPAIR KIT	Unrestricted	FIELD RAPIDMATE SEAL, FIELD REPAIR KIT	1130298-00-A	1	Use in "rapidmate seal only replacement" procedure
*	FIELD RAPIDMATE SEAL, FIELD REPAIR KIT	Unrestricted	FIELD RAPIDMATE SEAL, FIELD REPAIR KIT	1130298-00-A	1	Use in "rapidmate seal only replacement" procedure
*	BATTERY BOLTS, SERVICE REPAIR KIT, SX	Unrestricted	BATTERY BOLTS, SERVICE REPAIR KIT, SX	1138547-00-A	1	Bolts used when removing any battery back
*	BATTERY BOLTS, SERVICE REPAIR KIT, SX	Unrestricted	BATTERY BOLTS, SERVICE REPAIR KIT, SX	1138547-00-A	1	Bolts used when removing any battery back
*	BATTERY BOLTS, SERVICE REPAIR KIT, SX	Unrestricted	BATTERY BOLTS, SERVICE REPAIR KIT, SX	1138547-00-A	1	Bolts used when removing any battery back

BODY PANELS

Body Side Panels

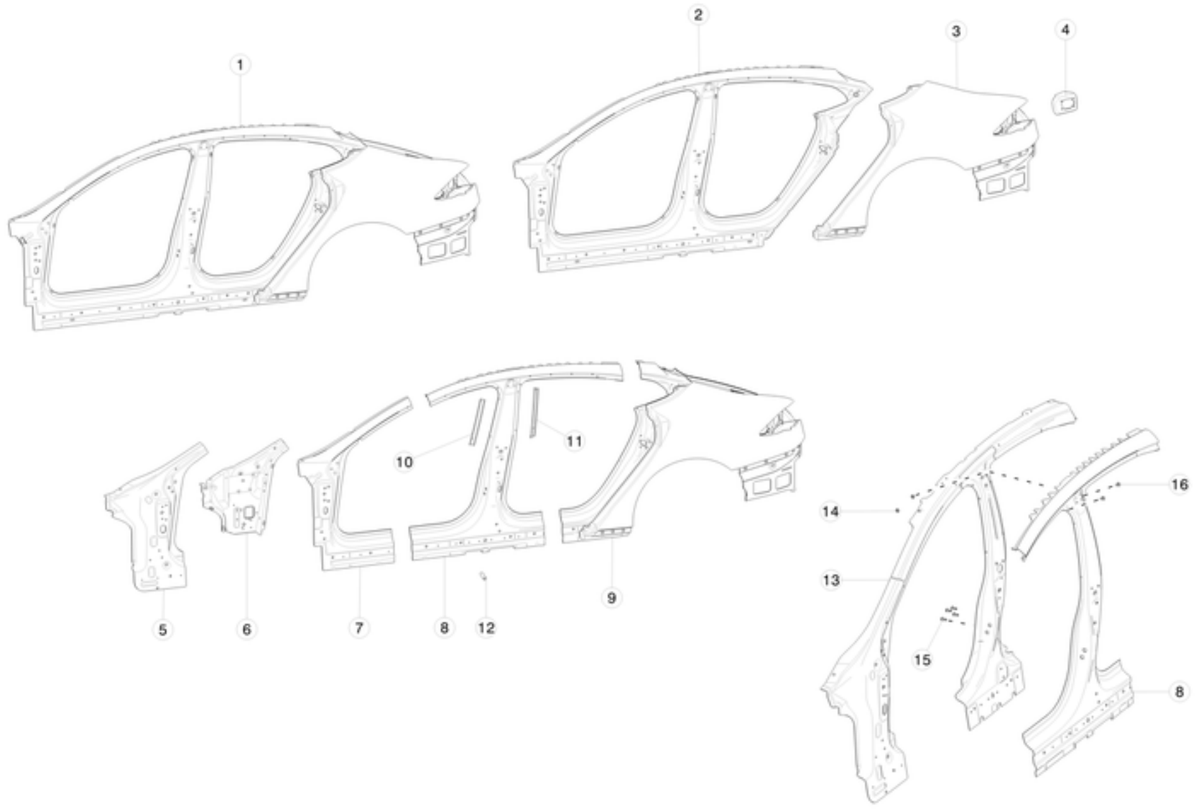

No	Part Name	Category	Part Description	Part Number	Qty	Comments
1	ASY - BODY SIDE OTR COMP LH SVC	Unrestricted	COMPLETE BODYSIDE OUTER LEFT - SMALL CHARGEPORT	1021940-S0-B	1	Structural - Approved Body Shop Only - small chargeport. All North America, Japan, and Hong Kong RWD vehicles. OK to replace -A, must patch camera hole with butyl foil patch (1043439-00-A).
1	ASSY - BODY SIDE OTR COMP LH SVC EU	Unrestricted	COMPLETE BODYSIDE OUTER LEFT - LARGE CHARGEPORT	1023180-S0-B	1	Structural - Approved Body Shop Only - large chargeport.All Dual Motor vehicles. OK to replace -A, must patch camera hole with butyl foil patch (1043439-00-A).
1	ASY - BODY SIDE OTR COMP RH SVC	Unrestricted	COMPLETE BODYSIDE OUTER RIGHT	1024193-S0-B	1	Structural - Approved Body Shop Only. OK to replace -A, must patch camera hole with butyl foil patch (1043439-00-A).
2	ASSY - PNL-BODY SIDE OTR LH SVC	Unrestricted	BODYSIDE PANEL LEFT	1024195-S0-B	1	Structural - Approved Body Shop Only. OK to replace -A, must patch camera hole with butyl foil patch (1043439-00-A).
2	ASSY - PNL-BODY SIDE OTR RH SVC	Unrestricted	BODYSIDE PANEL RIGHT	1024197-S0-B	1	Structural - Approved Body Shop Only. OK to replace -A, must patch camera hole with butyl foil patch (1043439-00-A).
3	ASSY - RR QUARTER OTR LH SVC	Unrestricted	REAR QUARTER OUTER LEFT - LARGE CHARGEPORT	1031638-S0-A	1	Structural - Approved Body Shop Only. Outer quarter panel with tail light pocket.
3	ASSY - RR QUARTER OTR RH	Unrestricted	REAR QUARTER OUTER RIGHT	1020514-S0-A	1	Structural - Approved Body Shop Only. Outer quarter panel with tail light pocket.
4	REINF - RR LAMP HOUSING LH SVC EU	Unrestricted	REINFORCEMENT, REAR LAMP HOUSING, LEFT - LARGE CHARGEPORT	1022459-S0-A	1	Structural - Approved Body Shop Only.
4	REINF - RR LAMP HOUSING RH SVC	Unrestricted	REINFORCEMENT, REAR LAMP HOUSING,RIGHT	1003097-S0-B	1	Structural - Approved Body Shop Only.
5	ASY - HINGE PILLAR LH SVC	Unrestricted	PILLAR HINGE LEFT	1024211-S0-B	1	Structural - Approved Body Shop Only.
5	ASY - HINGE PILLAR RH SVC	Unrestricted	PILLAR HINGE RIGHT	1024210-S0-B	1	Structural - Approved Body Shop Only.
6	ASY - COWL SIDE LH SVC	Unrestricted	COWL SIDE LEFT	1021901-S0-A	1	Structural - Approved Body Shop Only

6	ASY - COWL SIDE RH SVC	Unrestricted	COWL SIDE RIGHT	1021900-S0-A	1	Structural - Approved Body Shop Only
7	ASSY - BODY SIDE OTR A-PILLAR LH SVC	Unrestricted	BODYSIDE OUTER A-PILLAR LEFT	1024199-S0-B	1	Structural - Approved Body Shop Only. OK to replace -A, must patch camera hole with butyl foil patch (1043439-00-A).
7	ASSY - BODY SIDE OTR A-PILLAR RH SVC	Unrestricted	BODYSIDE OUTER A-PILLAR RIGHT	1024198-S0-B	1	Structural - Approved Body Shop Only. OK to replace -A, must patch camera hole with butyl foil patch (1043439-00-A).
8	ASSY - BODY SIDE OTR B-PILLAR LH SVC	Unrestricted	BODYSIDE OUTER B-PILLAR LEFT	1024206-S0-B	1	Structural - Approved Body Shop Only. Must also order the following hardware: 1014747-00-A, 1008833-01-A, and 1006628-01-A. OK to replace -A, must patch camera hole with butyl foil patch (1043439-00-A).
8	ASSY - BODY SIDE OTR B-PILLAR RH SVC	Unrestricted	BODYSIDE OUTER B-PILLAR RIGHT	1024205-S0-B	1	Structural - Approved Body Shop Only. Must also order the following hardware: 1014747-00-A, 1008833-01-A, and 1006628-01-A. OK to replace -A, must patch camera hole with butyl foil patch (1043439-00-A).
9	ASSY - BODY SIDE OTR C-PILLAR LH SVC	Unrestricted	BODYSIDE OUTER C-PILLAR LEFT - SMALL CHARGEPORT	1024208-S0-B	1	Structural - Approved Body Shop Only. Full quarter panel with jambs - small chargeport. All North America, Japan, and Hong Kong RWD vehicles. OK to replace -A, must patch camera hole with butyl foil patch (1043439-00-A).
9	ASSY - BODY SIDE OTR C-PILLAR LH SVC EU	Unrestricted	BODYSIDE OUTER C-PILLAR LEFT - LARGE CHARGEPORT	1031531-S0-B	1	Structural - Approved Body Shop Only. Full quarter panel with jambs - large chargeport. All European, Australia, and China vehicles and all Dual Motor vehicles. OK to replace 1031531-S0-A, must patch camera hole with butyl foil patch (1043439-00-A).
9	ASSY - BODY SIDE OTR C-PILLAR RH SVC	Unrestricted	BODYSIDE OUTER C-PILLAR RIGHT	1024207-S0-B	1	Structural - Approved Body Shop Only. Full quarter panel with jambs. OK to replace -A, must patch camera hole with butyl foil patch (1043439-00-A).
10	CARRIER, BODY SIDE B-PILLAR FR UPR, LH	Unrestricted	CARRIER, BODYSIDE B-PILLAR FRONT UPPER, LEFT	6009579-00-B	1	
10	CARRIER, BODY SIDE B-PILLAR FR UPR, RH	Unrestricted	CARRIER, BODYSIDE B-PILLAR FRONT UPPER, RIGHT	6009570-00-B	1	
11	CARRIER, BODY SIDE B-PILLAR RR UPR, LH	Unrestricted	CARRIER, BODYSIDE B-PILLAR REAR UPPER, LEFT	6009571-00-D	1	Order in quantities of 25; minimum order: 25.
11	CARRIER, BODY SIDE B-PILLAR RR UPR, RH	Unrestricted	CARRIER, BODYSIDE B-PILLAR REAR UPPER, RIGHT	6009572-00-D	1	
12	MOUNT-SEAT BELT ATTACH SVC	Unrestricted	MOUNT-SEAT BELT ATTACHMENT	6006767-S0-B	2	Structural - Approved Body Shop Only
13	ASSY - A / B PILLAR COMP LH SVC	Unrestricted	COMPLETE A AND B PILLAR LEFT	1033197-S0-A	1	Structural - Approved Body Shop Only. Must also order the following hardware: 1014747-00-A, 1008833-01-A, and 1006628-01-A.
13	ASSY - A / B PILLAR COMP RH SVC	Unrestricted	COMPLETE A AND B PILLAR RIGHT	1033380-S0-A	1	Structural - Approved Body Shop Only. Must also order the following hardware: 1014747-00-A, 1008833-01-A, and 1006628-01-A.
14	NUT,M8-1.25,HF,Steel[10],ZnAl,BLACK	Unrestricted	NUT,M8-1.25,STEEL,ZINC ALUMINUM,BLACK	1006628-01-A	2	Use for B-pillar replacement. Item #9, 10, 25, and 26. Order in quantities of 50; minimum order: 50.
15	BLT,TRX,PFLG,M8-1.25xTBD[9.8]-09	Unrestricted	BOLT M8x20 WITH MATPOINT	1014747-00-B	4	Use for B-pillar replacement. Item #9, 10, 25, and 26. Order in quantities of 50; minimum order: 50.
16	BLT PANFLG TRX M8-1.25x16[9.8]ZnAl, BLK	Unrestricted	BOLT PANHEAD FLANGE TORX M8-1.25x16[9.8]ZINC ALUMINUM, BLACK	1008833-01-A	2	Use for B-pillar replacement. Item #9, 10, 25, and 26.
40	MOUNT - FR SEAT FR SVC	Unrestricted	MOUNT - FRONT SEAT FRONT	6006775-S0-A	2	Structural - Approved Body Shop Only
41	MOUNT - FR SEAT RR M10 SVC	Unrestricted	MOUNT - FRONT SEAT REAR M10	1011511-S0-B	2	Structural - Approved Body Shop Only
42	MOUNT - FR SEAT RR M8 SVC	Unrestricted	MOUNT - FRONT SEAT REAR M8	6006783-S0-B	2	Structural - Approved Body Shop Only.
43	MOUNT - FR SEAT RR M10 SVC	Unrestricted	MOUNT - FRONT SEAT M10	1002032-S0-B	2	Structural - Approved Body Shop Only.
*	Aluminum MIG Wire Spool 5-pound spool (8")	Unrestricted	ER4145 ALUMINUM WELDING WIRE, 1.2 mm (.045 in) DIAMETER	1022767-00-A	1	Structural - Approved Body Shop Only
*	SPR Rivet C 5x4 H4 SKR	Unrestricted	SELF-PIERCING RIVET C 5x4 H4 SKR	1026936-00-A	**	Structural - Approved Body Shop Only. Only available in quantities of 10 pieces.
*	SPR Rivet C 5x4.5 H4 SKR	Unrestricted	SELF-PIERCING RIVET C 5x4.5 H4 SKR	1026938-00-A	**	Structural - Approved Body Shop Only. Only available in quantities of 10 pieces.
*	SPR Rivet C 5x5 H4 SKR	Unrestricted	SELF-PIERCING RIVET C 5x5 H4 SKR	1026939-00-A	**	Structural - Approved Body Shop Only. Only available in quantities of 10 pieces.
*	SPR Rivet C 5x6 H4 SKR	Unrestricted	SELF-PIERCING RIVET C 5x6 H4 SKR	1026940-00-A	**	Structural - Approved Body Shop Only. Only available in quantities of 10 pieces.
*	SPR Rivet C 5x6 H2 SKR	Unrestricted	SELF-PIERCING RIVET C 5x6 H2 SKR	1026941-00-A	**	Structural - Approved Body Shop Only. Only available in quantities of 10 pieces.
*	SPR Rivet C 5x6.5 H4 SKR	Unrestricted	SELF-PIERCING RIVET C 5x6.5 H4 SKR	1026942-00-A	**	Structural - Approved Body Shop Only. Only available in quantities of 10 pieces.
*	SPR Rivet C 5x7 H4 SKR	Unrestricted	SELF-PIERCING RIVET C 5x7 H4 SKR	1026943-00-A	**	Structural - Approved Body Shop Only. Only available in quantities of 10 pieces.
*	SPR Rivet K 5x8 H4 SKR	Unrestricted	SELF-PIERCING RIVET K 5x8 H4 SKR	1026944-00-A	**	Structural - Approved Body Shop Only. Only available in quantities of 10 pieces.
*	SPR Rivet P 5x8 H4 SK	Unrestricted	SELF-PIERCING RIVET P 5x8 H4 SK	1026945-00-A	**	Structural - Approved Body Shop Only. Only available in quantities of 10 pieces.
*	SPR Rivet K 5x9 H4 SKR	Unrestricted	SELF-PIERCING RIVET K 5x9 H4	1028629-00-A	**	Structural - Approved Body Shop Only. Only available in quantities of 10 pieces.
*	Rivet, 6.5MM, 2.0 - 9.5MM	Unrestricted	RIVET 6.5MM, 2.0 - 9.5MM	1028408-00-A	**	Structural - Approved Body Shop Only. Only available in quantities of 10 pieces.
*	Rivet, 6.5MM, 2.0-15.9MM	Unrestricted	RIVET 6.5MM, 2.0-15.9MM	1028409-00-A	**	Structural - Approved Body Shop Only. Only available in quantities of 10 pieces.
*	Rivet, 4.8MM, 1.6 - 6.9MM	Unrestricted	RIVET 4.8MM, 1.6 - 6.9MM	1028719-00-A	**	Structural - Approved Body Shop Only. Only available in quantities of 10 pieces.
*	BOM5/16 Kit Stl Zinc Grip7.95-11.1 Qty:1	Unrestricted	BOM 5/16 (7.9MM) KIT STEEL ZINC GRIP 7.95-11.10MM QUANTITY: 1	1062555-00-A	**	Structural - Approved Body Shop Only.

*	Pin AND Collar 5/16 Kit Stl Znc 3.2-19.1 Qty1	Unrestricted	PIN AND COLLAR 5/16 (7.9mm) KIT STEEL ZINC GRIP 3.2-19.1mm QUANTITY: 1	1062556-00-A	**	Structural - Approved Body Shop Only.
*	Pin AND Collar 1/4Kit Stl Zinc 1.6-15.9 Qty1	Unrestricted	PIN AND COLLAR 1/4 (6.5MM) KIT STEEL ZINC GRIP 1.6-15.9MM QUANTITY: 1	1062557-00-A	**	Structural - Approved Body Shop Only.
*	Lrg Flng Riv6.5 Kit Stl Zn 2-15.9 Qty1	Unrestricted	LARGE FLANGE RIVET 6.5MM STEEL KIT ZINC GRIP 2.0-15.9mm QUANTITY: 1	1062558-00-A	**	Structural - Approved Body Shop Only.
*	Str.Cmmn Riv 6.5 Kit Stl Zn 3-13.5 Qty1	Unrestricted	STR COMMON RIVET 6.5MM KIT STEEL ZINC GRIP 3.0-13.5MM QUANTITY: 1	1062559-00-A	**	Structural - Approved Body Shop Only.
*	Str. Bulb Riv6.5 Kit Stl Zn 2-4.5 Qty1	Unrestricted	STR BULB RIVET 6.5MM KIT STEEL ZINC GRIP 2.0-4.5MM QUANTITY: 1	1063943-00-A	**	Structural - Approved Body Shop Only.
*	STRUCTURAL ADHESIVE, FUSOR 2098	Unrestricted	FUSOR 2098 STRUCTURAL ADHESIVE	1062697-00-A	**	Structural - Approved Body Shop Only.
*	SPR PUNCH ALUMINUM SPACER - 5MM - QTY 1	Unrestricted	SPR PUNCH ALUMINUM SPACER - 5MM - QTY 1	1045183-00-A	**	Structural - Approved Body Shop Only. Use with SPR rivet tool.
*	SPR PUNCH MAGNET - 5MM - QTY 1	Unrestricted	SPR PUNCH MAGNET - 5MM - QTY 1	1045181-00-A	**	Structural - Approved Body Shop Only. Use with SPR rivet tool.
*	SPR PUNCH PRESSURE RING - 5MM - QTY 1	Unrestricted	SPR PUNCH PRESSURE RING - 5MM - QTY 1	1045182-00-A	**	Structural - Approved Body Shop Only. Use with SPR rivet tool.
*	NUT RVT RND THN M6-1.00x3 ZnNi	Unrestricted	NUT, RIVET, ROUND HEAD ,THIN, M6-1.00x3 ZINC NICKEL	2007016	6	Used to install rocker

Closure Panels

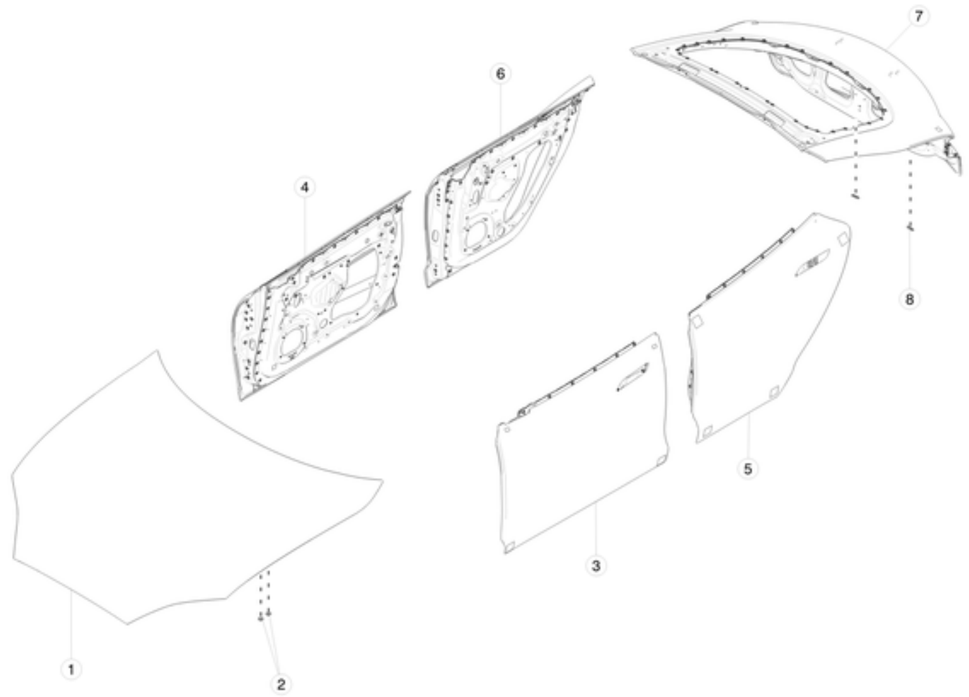

No	Part Name	Category	Part Description	Part Number	Qty	Comments
1	HOOD ASY COMP, SINGLE LATCH, ECOAT ONLY	Unrestricted	HOOD ASSEMBLY	1051875-E0-G	1	
*	BUMPER-OVERSLAM AT LWR LIFTGATE	Unrestricted	BUMPER-OVERSLAM, AT LOWER LIFTGATE	6007220-00-B	2	
2	PLUG-HOOD DATUM HOLES	Unrestricted	PLUG FOR DATUM HOLES IN HOOD	1020908-00-A	4	Order in quantities of 25; minimum order: 25.
3	ASY - DOOR COMP, FR LH ECOATED	Unrestricted	FRONT LEFT DOOR	6006662-E0-G	1	6006662-E0-G can replace -E. For vehicles built before October 26, 2016, order with 1100299-S0-A door handle and 1063215-00-B hard cover. For doors with metal grips, order spacers 2x 1052476-00-A and 1x 1052477-00-A. Please refer to door handle section for details and illustrations.
4	ASY - DOOR COMP, FR RH ECOATED	Unrestricted	FRONT RIGHT DOOR	6006622-E0-G	1	6006622-E0-G can replace -E. For vehicles built before October 26, 2016, order with 1100300-S0-A door handle and 1064744-00-B hard cover. For doors with metal grips, order spacers 2x 1052476-00-A and 1x 1052477-00-A. Please refer to door handle section for details and illustrations.
5	ASY - DOOR COMP, RR LH ECOATED	Unrestricted	REAR LEFT DOOR	6006394-E0-G	1	6006394-E0-G can replace -F. For vehicles built before October 26, 2016, order with 1100299-S0-A door handle and 1063215-00-B hard cover. For doors with metal grips, order spacers 2x 1052476-00-A and 1x 1052477-00-A. Please refer to door handle section for details and illustrations.
6	ASY - DOOR COMP, RR RH ECOATED	Unrestricted	REAR RIGHT DOOR	6006566-E0-G	1	6006566-E0-G can replace 6006566-E0-F. For vehicles built before October 26, 2016, order with 1100300-S0-A door handle and 1064744-00-B hard cover. For doors with metal grips, order spacers 2x 1052476-00-A and 1x 1052477-00-A. Please refer to door handle section for details and illustrations.
7	LIFTGATE ASY - COMP, SVC ECOATED	Unrestricted	LIFTGATE, MANUAL	1023721-E0-A	1	
7	LIFTGATE ASY - COMP PWR, SVC ECOATED	Unrestricted	LIFTGATE, POWER	1023722-E0-A	1	
8	LIFTGATE DRAIN PLUG	Unrestricted	LIFTGATE DRAIN PLUG	1061808-00-B	2	

Front Fenders

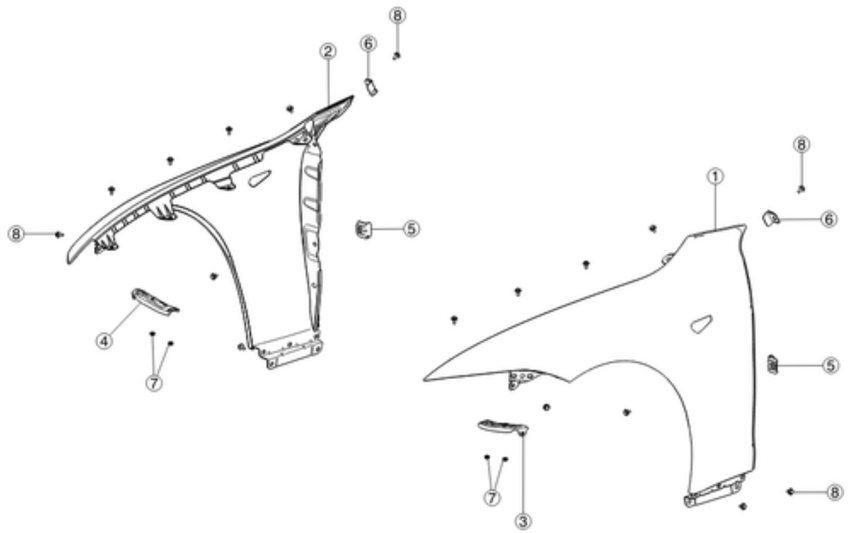

No	Part Name	Category	Part Description	Part Number	Qty	Comments
1	ASSY - FRONT FENDER, LH SVC	Unrestricted	FRONT FENDER, LEFT	6008022-E0-D	1	OK to use C
2	ASSY - FRONT FENDER,RH SVC	Unrestricted	FRONT FENDER, RIGHT	6008027-E0-D	1	OK to use C
3	ASY-FR FENDER BRACE LH SVC	Unrestricted	FRONT FENDER BRACE LEFT	6009030-S0-B	1	
4	ASY-FR FENDER BRACE RH SVC	Unrestricted	FRONT FENDER BRACE RIGHT	6009029-S0-B	1	
5	ASY - BRKT FR FENDER	Unrestricted	FRONT FENDER BRACKET	6008776-S0-A	2	
6	BRKT FR FENDER RR UPR	Unrestricted	BRACKET FRONT FENDER REAR UPPER	1011804-S0-B	2	
7	NUT HF M6-1.00[8]ZnAl	Unrestricted	NUT M6-1.00 ZINC ALUMINUM	2007207	4	Use to install items #3 and #4. Order in quantities of 25; minimum order: 25.
8	BLT WSHR FLAT M6-1.00x16 ZnAl	Unrestricted	BOLT WASHER FLAT M6-1.00x16 ZINC ALUMINUM	1004537-00-A	18	Use for fenders
*	INSTAPACK SIZE 80, UWCA374PRT40	Unrestricted	INSTAPACK SIZE 80, UWCA374PRT40	1046403-00-A	**	

Front Inner Panels

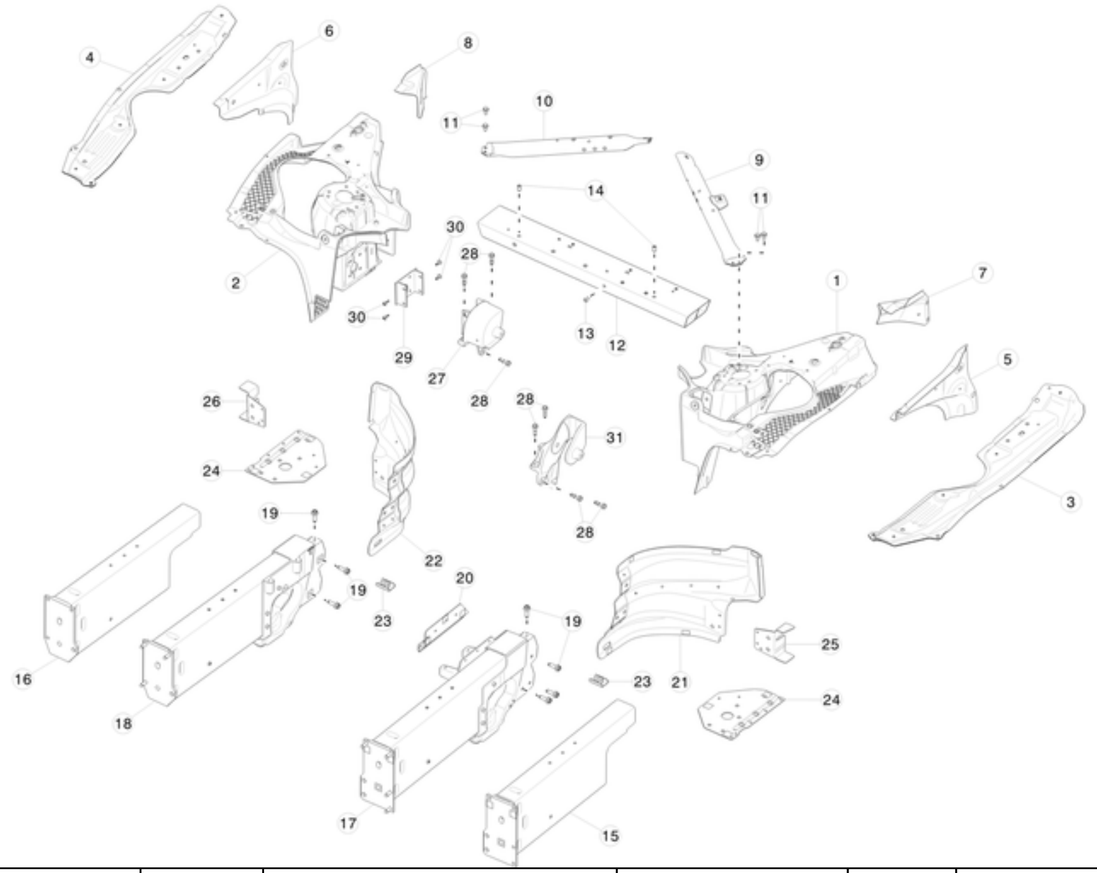

No	Part Name	Category	Part Description	Part Number	Qty	Comments
1	SHOCK TOWER FR LH AWD	Unrestricted	SHOCK TOWER FRONT LEFT	1047517-S0-C	1	For vehicles manufactured on or after 8/21/17. Structural - Approved Body Shop Only.
1	SHOCK TOWER FR LH AWD	Unrestricted	SHOCK TOWER FRONT LEFT	1047517-S0-B	1	For vehicles manufactured before 8/21/17. Structural - Approved Body Shop Only. OK to replace 1022598-S0-G
2	SHOCK TOWER FR RH AWD	Unrestricted	SHOCK TOWER FRONT RIGHT	1047518-S0-C	1	For vehicles manufactured on or after 8/21/17. Structural - Approved Body Shop Only.
2	SHOCK TOWER FR RH AWD	Unrestricted	SHOCK TOWER FRONT RIGHT	1047518-S0-B	1	For vehicles manufactured before 8/21/17. Structural - Approved Body Shop Only. OK to replace 1022599-S0-L
3	ASY - SHOTGUN UPR LH SVC	Unrestricted	SHOTGUN UPPER, LEFT	6008311-S0-B	1	Structural - Approved Body Shop Only
4	ASY - SHOTGUN UPR RH SVC	Unrestricted	SHOTGUN UPPER, RIGHT	6008313-S0-B	1	Structural - Approved Body Shop Only
5	ASY - PNL-SHOTGUN OTR LH SVC	Unrestricted	PANEL-SHOTGUN OUTER LEFT	1003438-S0-A	1	Structural - Approved Body Shop Only
6	ASY - PNL-SHOTGUN OTR RH SVC	Unrestricted	PANEL-SHOTGUN OUTER RIGHT	6006600-S0-A	1	Structural - Approved Body Shop Only
7	EXTN - SHOCK TOWER FR LH SVC	Unrestricted	FRONT SHOCK TOWER EXTENSION - LEFT	6008113-S0-A	1	Structural - Approved Body Shop Only
8	EXTN - SHOCK TOWER FR RH SVC	Unrestricted	FRONT SHOCK TOWER EXTENSION - RIGHT	6008069-S0-A	1	Structural - Approved Body Shop Only
9	ASY - MEMBER SHOCK TWR BRACE, LH	Unrestricted	SHOCK TOWER BRACE, LEFT	1064610-00-D	1	Structural - Approved Body Shop Only.
10	ASY - MEMBER SHOCK TWR BRACE, RH	Unrestricted	SHOCK TOWER BRACE, RIGHT	1064611-00-B	1	Structural - Approved Body Shop Only.
11	BLT,M8-1.25x25,9.8,PAN FLG,TRX,850 ZnAl	Unrestricted	BOLT, M8-1.25x25,9.8,PAN FLANGE,TORX, ZINC ALUMINUM	1013341-00-A	4	Structural - Approved Body Shop Only
12	ASY - FR SHOCK TOWER CMBR SVC	Unrestricted	FRONT SHOCK TOWER CROSSMEMBER	1021796-S0-C	1	Structural - Approved Body Shop Only. VIN must be engraved onto part prior to delivery
13	NUT RVT RND THN M6-1.00x3 ZnNi	Unrestricted	NUT, RIVET, ROUND HEAD ,THIN, M6-1.00x3 ZINC NICKEL	2007016	11	use on 1021796-S0-A
14	NUT RVT RND THN M6-1.00x3.5 ZnAl	Unrestricted	NUT, RIVET, ROUND HEAD ,THIN, M6-1.00x3.5 ZINC ALUMINUM	2007223	2	use on 1021796-S0-A

15	ASY-MEMBER RAIL FR LH AWD	Unrestricted	FRONT LEFT RAIL - WITH DUAL MOTOR	1022588-S0-G	1	Structural - Approved Body Shop Only. For vehicles manufactured before April 6, 2016.
15	ASY-MEMBER RAIL FR LH AWD	Unrestricted	FRONT LEFT RAIL - WITH DUAL MOTOR	1022588-S0-J	1	Structural - Approved Body Shop Only. 1022588-S0-J can replace -G.
16	ASY-MEMBER RAIL FR RH AWD	Unrestricted	FRONT RIGHT RAIL - WITH DUAL MOTOR	1022589-S0-G	1	Structural - Approved Body Shop Only. For vehicles manufactured before April 6, 2016.
16	ASY-MEMBER RAIL FR RH AWD	Unrestricted	FRONT RIGHT RAIL - WITH DUAL MOTOR	1022589-S0-J	1	Structural - Approved Body Shop Only. 1022588-S0-J can replace -G.
*	STUD,WLD,RND,M6-29.5[AL]CO	Unrestricted	STUD,WLD,RND,M6-29.5[AL]CO	1013806-00-A	1	Structural - Approved Body ShopOnly. Use with 1022589-S0-F.
*	STUD WLD AL FLG T5x15.5	Unrestricted	STUD WLD AL FLG T5x15.5	2007122-00-A	1	Structural - Approved Body Shop Only. Use with 1022589-S0-F.
17	FRONT RAIL AND ADAPTOR, LH	Unrestricted	FRONT RAIL AND ADAPTOR, LEFT	1022585-S0-H	1	Structural - Approved Body Shop Only. Includes front rail and adaptor
18	FRONT RAIL AND ADAPTOR, RH	Unrestricted	FRONT RAIL AND ADAPTOR, RIGHT	1022586-S0-H	1	Structural - Approved Body Shop Only. Includes front rail and adaptor
19	BOLT HF M10x1.50x25 [10.9]-G720	Unrestricted	BOLT HF M10x1.50x25 [10.9]-G720	2007116	12	For use with 1022585-S0-H and 1022586-S0-H
20	REINF, SHOCK TOWER LH	Unrestricted	REINFORCEMENT, SHOCK TOWER, LEFT, DUAL MOTOR	1023607-S0-B	1	Structural - Approved Body Shop Only
21	EXTENSION - FR RAIL OTR LH	Unrestricted	FRONT RAIL OUTER EXTENSION LEFT - WITH DUAL MOTOR	1031520-S0-B	1	Structural - Approved Body Shop Only
22	EXTENSION - FR RAIL OTR RH	Unrestricted	FRONT RAIL OUTER EXTENSION RIGHT - WITH DUAL MOTOR	1031519-S0-B	1	Structural - Approved Body Shop Only
23	NUT PLATE, M14	Unrestricted	NUT PLATE, M14	1014378-00-A	2	Structural - Approved Body Shop Only
24	PLATE LWR - FR TORQUE BOX LH,ECOAT	Unrestricted	PLATE LOWER - FRONT TORQUE BOX LH ECOATED, DUAL MOTOR	1031674-S0-A	1	Structural - Approved Body Shop Only
24	PLATE LWR - FR TORQUE BOX RH,ECOAT	Unrestricted	PLATE LOWER - FRONT TORQUE BOX RH ECOATED, DUAL MOTOR	1031673-S0-A	1	Structural - Approved Body Shop Only
25	REINF - FR RAIL OTR EXTN LH SVC	Unrestricted	FRONT RAIL OUTER EXTENSION REINFORCEMENTS - LEFT	1014110-S0-B	1	Structural - Approved Body Shop Only
26	REINF - FR RAIL OTR EXTN RH SVC	Unrestricted	FRONT RAIL OUTER EXTENSION REINFORCEMENTS - IGHT	1014111-S0-B	1	Structural - Approved Body Shop Only
27	MOTOR MOUNT FRONT RH DM	Unrestricted	MOTOR MOUNT FRONT RIGHT DUAL MOTOR	1034558-S0-D	1	Structural - Approved Body Shop Only
28	BOLT - M8-1.25x30 - DIN6921 - G10.9 - MTPT - ZF720	Unrestricted	BOLT, M8-1.25x30MM, MATPOINT	1008722-00-A	7	Order in quantities of 25; minimum order: 25.
29	SHOCK TOWER REINFORCEMENT	Unrestricted	SHOCK TOWER REINFORCEMENT - WITH DUAL MOTOR	1045558-S0-A	1	Structural - Approved Body Shop Only
30	SCR,M5-0.8X16,R WSH,MPT,STL 8.8,ZN,PATCH	Unrestricted	SCREW, M5-0.8X16MM, ROUND WASHER HEAD, MATPOINT, STEEL ZINC WITH PATCH	1004379-00-B	4	
31	BRACKET, MOTOR MOUNT RH RR	Unrestricted	MOTOR MOUNT BRACKET RIGHT REAR DUAL MOTOR	1031049-S0-E	1	Structural - Approved Body Shop Only
*	STUD RVT RND THK M6-1.00x25 ZnAl	Unrestricted	STUD RVT RND THK M6-1.00x25 ZnAl	1003165-00-A	1	Structural - Approved Body Shop Only
*	MANUFACTURING BODY SHELL E-COATED	Unrestricted	MANUFACTURING BODY SHELL E-COATED	1053869-E0-A	1	Structural - Approved Body Shop Only

Rear End Panels

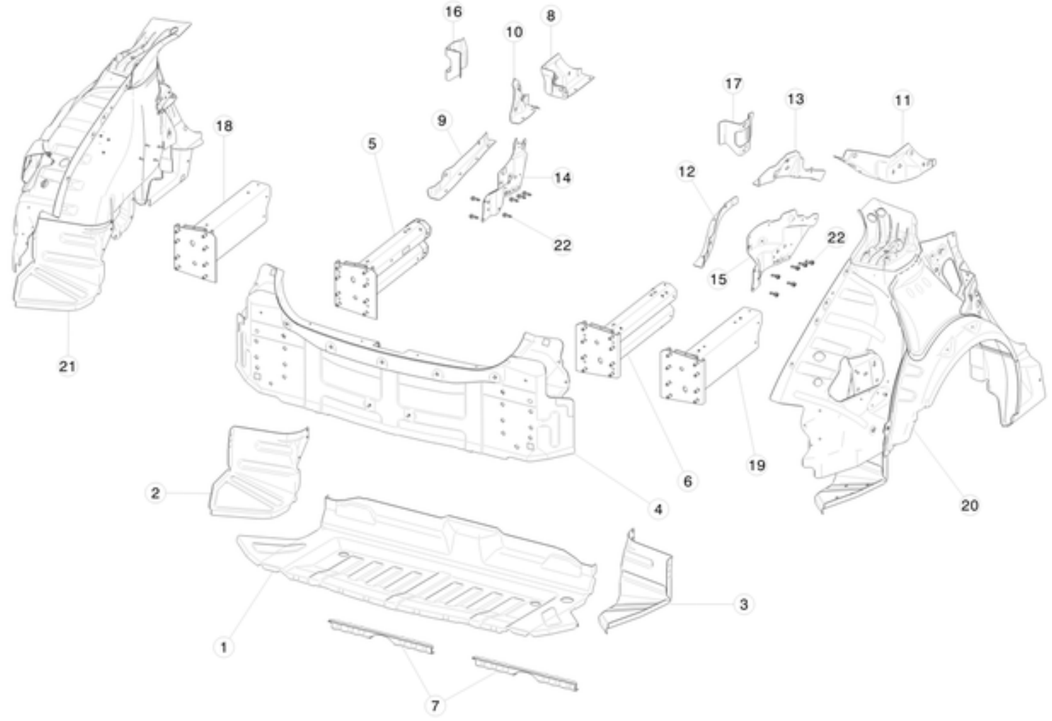

No	Part Name	Category	Part Description	Part Number	Qty	Comments
1	ASY - RR TRUNK FLOOR SVC	Unrestricted	REAR TRUNK FLOOR ASSEMBLY	1114861-S0-A	1	Structural - Approved Body Shop Only
2	EXTENSION RR TRUNK FLOOR PNL, LH	Unrestricted	TRUNK FLOOR PANEL EXTENSION REAR LEFT	6007415-S0-C	1	Structural - Approved Body Shop Only
3	EXTENSION RR TRUNK FLOOR PNL, RH	Unrestricted	TRUNK FLOOR PANEL EXTENSION REAR RIGHT	6007407-S0-D	1	Structural - Approved Body Shop Only
4	REAR BODY PANEL-RR COMP SVC	Unrestricted	REAR COMPLETE BODY PANEL	1021719-S0-A	1	Structural - Approved Body Shop Only.
7	ASY - BRKT RR DIFFUSER SVC	Unrestricted	REAR DIFFUSER BRACKET ASSEMBLY	1061491-S0-A	1	Structural - Approved Body Shop Only
8	MDLS, PNL, NODE CLOSEOUT P1P2 LH, SERVICE ONLY	Unrestricted	NODE CLOSEOUT LEFT PANEL - P1P2 - SERVICE ONLY	1033733-S0-A	1	Structural - Approved Body Shop Only
9	MDLS, PANEL NODE CLOSEOUT RR, LH, SERVICE ONLY	Unrestricted	NODE CLOSEOUT REAR LEFT PANEL - SERVICE ONLY	1033735-S0-A	1	Structural - Approved Body Shop Only
10	MDLS, ASY, 2ND ROW RETRACTOR PANEL, LH, SERVICE ONLY	Unrestricted	2ND ROW RETRACTOR LEFT PANEL ASSEMBLY - SERVICE ONLY	1033744-S0-A	1	Structural - Approved Body Shop Only
11	MDLS, PNL, NODE CLOSEOUT P1P2 RH, SERVICE ONLY	Unrestricted	NODE CLOSEOUT RIGHT PANEL - P1P2 - SERVICE ONLY	1036844-S0-A	1	Structural - Approved Body Shop Only
12	MDLS, PNL, Node REAR FLANGE, RH, SERVICE ONLY	Unrestricted	NODE CLOSEOUT REAR RIGHT PANEL - SERVICE ONLY	1036868-S0-A	1	Structural - Approved Body Shop Only
13	MDLS, ASY, 2ND ROW RETRACTOR PANEL, RH, SERVICE ONLY	Unrestricted	2ND ROW RETRACTOR RIGHT PANEL ASSEMBLY - SERVICE ONLY	1036871-S0-A	1	Structural - Approved Body Shop Only
14	REINF ASSY - REAR NODE - LH, SERVICE ONLY	Unrestricted	NEW REAR NODE LEFT REINFORCED ASSEMBLY - SERVICE ONLY	1037525-S0-A	1	Structural - Approved Body Shop Only
15	REINF ASSY - REAR NODE - RH, SERVICE ONLY	Unrestricted	NEW REAR NODE RIGHT REINFORCED ASSEMBLY - SERVICE ONLY	1037527-S0-B	1	Structural - Approved Body Shop Only
16	REINF WHL ARCH LINER LH (HPDC NODE), SERVICE ONLY	Unrestricted	REINFORCED WHEEL ARCH LEFT LINER - NEW NODE - SERVICE ONLY	1037781-S0-A	1	Structural - Approved Body Shop Only
17	REINF WHL ARCH LINER RH (HPDC NODE), SERVICE ONLY	Unrestricted	REINFORCED WHEEL ARCH RIGHT LINER - NEW NODE - SERVICE ONLY	1037782-S0-A	1	Structural - Approved Body Shop Only

18	MDLS, ASY, RR MEMBER RAIL, HPDC NODE, LH	Unrestricted	REAR LEFT MEMBER RAIL ASSEMBLY - 2ND GEN NODE	1055951-S0-A	1	Structural - Approved Body Shop Only.
19	MDLS, ASY, RR MEMBER RAIL, HPDC NODE, RH, SERVICE ONLY	Unrestricted	REAR RIGHT MEMBER RAIL ASSEMBLY - NEW NODE - SERVICE ONLY	1055952-S0-A	1	Structural - Approved Body Shop Only
20	ASSY - RR WHEELHOUSE COMP RH SVC	Unrestricted	REAR WHEELHOUSE ASSEMBLY, RIGHT	1024367-S0-A	1	Structural - Approved Body Shop Only
21	ASSY - RR WHEELHOUSE COMP LH SVC	Unrestricted	REAR WHEELHOUSE ASSEMBLY, LEFT	1024368-S0-A	1	Structural - Approved Body Shop Only
22	SCR,M8-1.25x20,HF,MAT PNT,STL,ZNC,PATCH	Unrestricted	SCREW M8-1.25x20 MAT POINT, STEEL, ZINC COATING WITH PATCH	1007580-00-A	12	Structural - Approved Body Shop Only
*	BRKT-HARNESS UNDERBODY	Unrestricted	UNDERBODY HARNESS BRACKET	1045741-00-B	1	for vehicles with the 2nd generation node
*	NUT,HEX,M6,1.0,STL,ZINCFLAKE,SL	Unrestricted	NUT,HEX,M6,1.0,STL,ZINCFLAKE,SL	1006799-00-B	4	use with 1045741-00-B
*	CLINCH NUT 7/16-20 PC10	Unrestricted	CLINCH NUT 7/16-20 PC10	1043567-00-B	1	Used in 1033744-S0-A MDLS, ASY, 2ND ROW RETRACTOR PANEL, LH, SERVICE ONLY
*	NUT HF M10 PC10	Unrestricted	NUT HF M10 PC10	1047337-00-A	8	Used in rear rail to rear panel
*	WSHR,10.5x24,Zn	Unrestricted	WSHR,10.5x24,Zn	1024072-00-A	8	Used in rear rail to rear panel. For vehicles without 3rd row seats. If required, use 1047337-00-A.

Rear Quarter Inner Panels

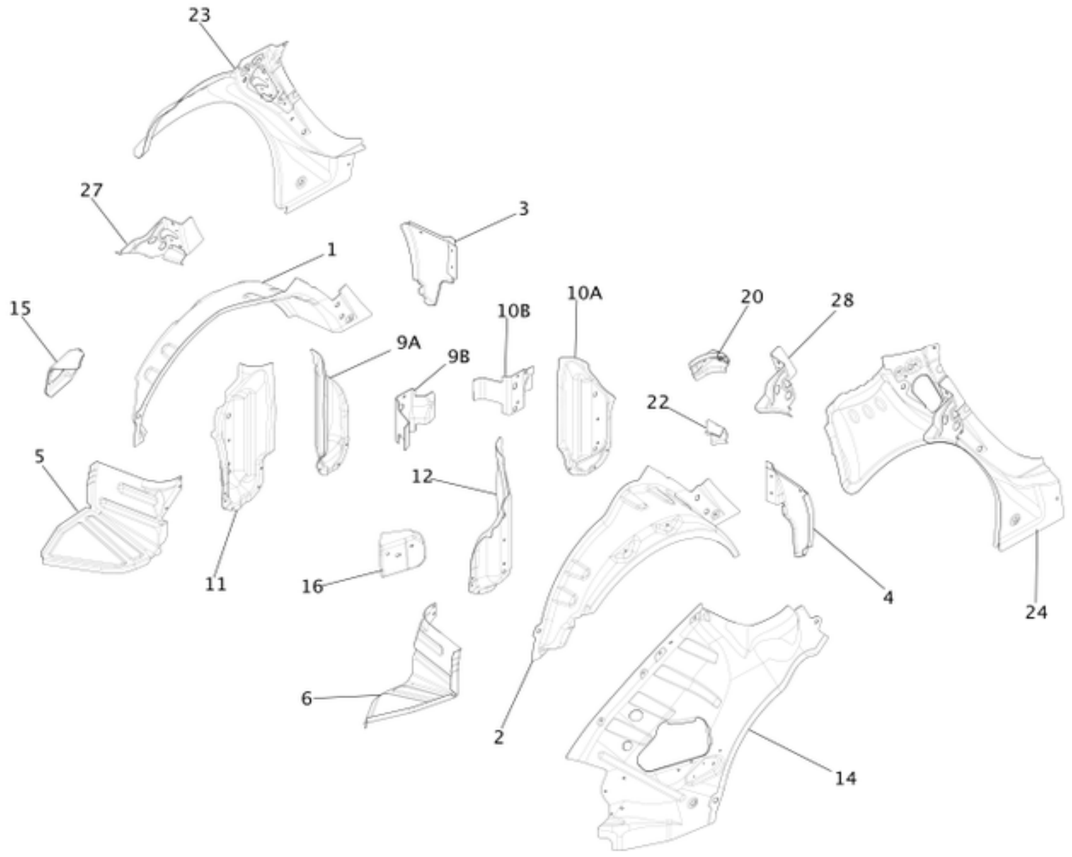

No	Part Name	Category	Part Description	Part Number	Qty	Comments
1	PNL WHEEL ARCH OTR LH	Unrestricted	WHEEL ARCH OUTER PANEL LEFT	6009916-S0-E	1	Structural - Approved Body Shop Only
2	PNL WHEEL ARCH OTR RH	Unrestricted	WHEEL ARCH OUTER PANEL RIGHT	6009895-S0-G	1	Structural - Approved Body Shop Only
3	EXTN RR WHEELHOUSE FR LH	Unrestricted	WHEELHOUSE EXTENSION - FRONT REAR LEFT	6008082-S0-C	1	Structural - Approved Body Shop Only
4	EXTN RR WHEELHOUSE FR RH	Unrestricted	WHEELHOUSE EXTENSION - FRONT REAR RIGHT	6008086-S0-F	1	Structural - Approved Body Shop Only
5	EXTENSION RR TRUNK FLOOR PNL, LH	Unrestricted	TRUNK FLOOR PANEL EXTENSION REAR LEFT	6007415-S0-C	1	Structural - Approved Body Shop Only
6	EXTENSION RR TRUNK FLOOR PNL, RH	Unrestricted	TRUNK FLOOR PANEL EXTENSION REAR RIGHT	6007407-S0-D	1	Structural - Approved Body Shop Only
9	REINF WHL ARCH LINER LH	Unrestricted	REINFORCEMENT, WHEELARCH LINER, LEFT	1037781-S0-A	1	Structural - Approved Body Shop Only.
10	REINF WHL ARCH LINER RH	Unrestricted	REINFORCEMENT, WHEELARCH LINER, RIGHT	1037782-S0-A	1	Structural - Approved Body Shop Only.
11	REINF SHOCK TOWER RR LH	Unrestricted	REINFORCEMENT, SHOCK TOWER, REAR, LEFT	6007874-S0-E	1	Structural - Approved Body Shop Only.
12	REINF SHOCK TOWER RR RH	Unrestricted	REINFORCEMENT, SHOCK TOWER, REAR, RIGHT	1007767-S0-C	1	Structural - Approved Body Shop Only.
13	ASSY - RR QTR INR + HDWR LH SVC	Unrestricted	REAR QUARTER INNER WITH HARDWARE, LEFT	1024372-S0-B	1	Structural - Approved Body Shop Only.
14	ASSY - RR QTR INR + HDWR RH SVC	Unrestricted	REAR QUARTER INNER WITH HARDWARE, RIGHT	1024371-S0-A	1	Structural - Approved Body Shop Only
15	REINF - RR LAMP HOUSING LH SVC EU	Unrestricted	REINFORCEMENT, REAR LAMP HOUSING, LEFT - LARGE CHARGEPORT	1022459-S0-A	1	Structural - Approved Body Shop Only.
16	REINF-RR LAMP HOUSING RH	Unrestricted	REINFORCEMENT, REAR LAMP HOUSING, RIGHT	1003097-S0-B	1	Structural - Approved Body Shop Only
19	ASY-BRKT-RR SEAT STRIKER LH	Unrestricted	REAR SEAT STRIKER BRACKET LEFT	6009026-00-D	1	Structural - Approved Body Shop Only
20	ASY-BRKT-RR SEAT STRIKER RH	Unrestricted	REAR SEAT STRIKER BRACKET RIGHT	6009027-00-D	1	Structural - Approved Body Shop Only
21	BRKT - SEAT BOLSTER LH	Unrestricted	SEAT BOLSTER BRACKET LEFT	1005667-00-A	1	Structural - Approved Body Shop Only

22	BRKT - SEAT BOLSTER RH	Unrestricted	SEAT BOLSTER BRACKET RIGHT	1005668-00-A	1	Structural - Approved Body Shop Only
23	ASY REINF C-PILLAR LH	Unrestricted	REINFORCEMENT, C-PILLAR ASSEMBLY, LEFT	1014652-S0-D	1	Structural - Approved Body Shop Only
24	ASY REINF C-PILLAR RH	Unrestricted	REINFORCEMENT, C-PILLAR ASSEMBLY, RIGHT	1014648-S0-C	1	Structural - Approved Body Shop Only
27	REINF - LATCH REAR DOOR, LH SVC	Unrestricted	REINFORCEMENT, REAR DOOR LATCH, LEFT	6008078-S0-C	1	Structural - Approved Body Shop Only
28	REINF - LATCH REAR DOOR, RH SVC	Unrestricted	REINFORCED REAR DOOR LATCH RIGHT	6008083-S0-C	1	Structural - Approved Body Shop Only

Rocker Panel Trim

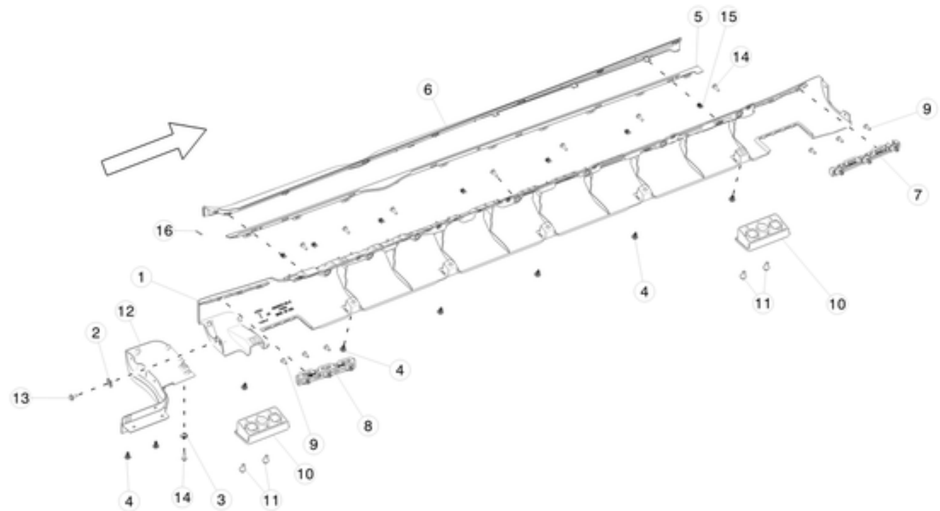

No	Part Name	Category	Part Description	Part Number	Qty	Comments
1	MOULDING-SILL OTR PNL LH (for plastic bright moulding)	Unrestricted	PLASTICS, ROCKER, LEFT, FOR PLASTIC BRIGHT MOULDING	1016414-00-D	1	Needs to be coordinated with 102475-00-G and 1012215-00-G
1	MOULDING-SILL OTR PNL RH (for plastic bright moulding)	Unrestricted	PLASTICS, ROCKER, RIGHT, FOR PLASTIC BRIGHT MOULDING	1016412-00-D	1	Needs to be coordinated with 1025042-00-G and 1012217-00-G
2	U-NUT M6x0.6-3.5	Unrestricted	U-NUT M6x0.6-3.5	1006518-00-A	2	Order in quantities of 50; minimum order: 50.
3	U-NUT,M6 X 1	Unrestricted	U-NUT, M6 X 1	1010416-00-B	2	
4	PUSH PIN CLIPS	Unrestricted	RIVET PUSH-PULL 8X18X20.0	1006521-00-A	16	Order in quantities of 50; minimum order: 50.
5	BRIGHT MOULDING-SILL LH (plastic)	Unrestricted	BRIGHT MOULDING, SILL LEFT - PLASTIC	1024575-00-G	1	Needs to be coordinated with 1016414-00-D and 1012215-00-G
5	BRIGHT MOULDING-SILL RH (plastic)	Unrestricted	BRIGHT MOULDING, SILL RIGHT - PLASTIC	1025042-00-G	1	Needs to be coordinated with 1016412-00-D and 1012217-00-G
6	SCUFF PLATE, PLASTIC, LH	Unrestricted	SCUFF PLATE, PLASTIC, LEFT FOR PLASTIC BRIGHT MOULDING	1012215-00-G	1	Needs to be coordinated with 1016414-00-D and 1024575-00-G
6	SCUFF PLATE, PLASTIC, RH	Unrestricted	SCUFF PLATE, PLASTIC, RIGHT FOR PLASTIC BRIGHT MOULDING	1012217-00-G	1	Needs to be coordinated with 1016412-00-D and 1025042-00-G
7	MOULDING SILL (ROCKER) BRACKET LH FRONT	Unrestricted	BRACKET - ROCKER SUPPORT FRONT LEFT	1003692-00-C	1	
7	MOULDING SILL (ROCKER) BRACKET RH FRONT	Unrestricted	BRACKET - ROCKER SUPPORT FRONT RIGHT	1003693-00-C	1	
8	BRKT - ROCKER SUPPORT RR	Unrestricted	BRACKET - ROCKER SUPPORT REAR	1003691-00-B	2	
9	SCR ST WSHR M6x20 ZnAl	Unrestricted	SCREW WASHER M6x20 ZINC ALUMINUM	1006539-00-A	12	
10	JACKING PAD	Unrestricted	JACKING PAD	1009124-00-C	4	
11	BOLT HF M8x1.25x20	Unrestricted	BOLT M8x1.25x20	2007113	8	Order in quantities of 100; minimum order: 100.

12	FAIRING - WHEEL RR LH	Unrestricted	FAIRING - WHEEL RR LH	1058757-00-A	1	
12	FAIRING - WHEEL RR RH	Unrestricted	FAIRING - WHEEL RR RH	1058758-00-A	1	
13	SCR HEX HEAD M6X20 ZnAl	Unrestricted	SCREW HEX HEAD M6X20 ZINC ALUMINUM	1010261-00-A	2	Order in quantities of 50; minimum order: 50.
14	BLT HF M6-1.00X20[4.8]ZnAl Patch	Unrestricted	BOLT M6-1.00X20 ZINC ALUMINUM WITH THREADLOCK	1010496-00-A	16	use to install rocker and fairing
15	CLIP, UBELL, PNL 1.5-3.5 SLT 6.0x21.0	Unrestricted	CLIP, U-BELL, PANEL 1.5-3.5 SLOTTED 6.0x 21.0	1011978-00-A	14	use to install molding sills. Order in quantities of 50; minimum order: 50.
16	TAPE, DBL SIDED ADHESIVE, SCUFF PLATE	Unrestricted	DOUBLE SIDED SCUFF PLATE ADHESIVE TAPE	1017616-00-A	2	use to install molding sills

Roof Panels

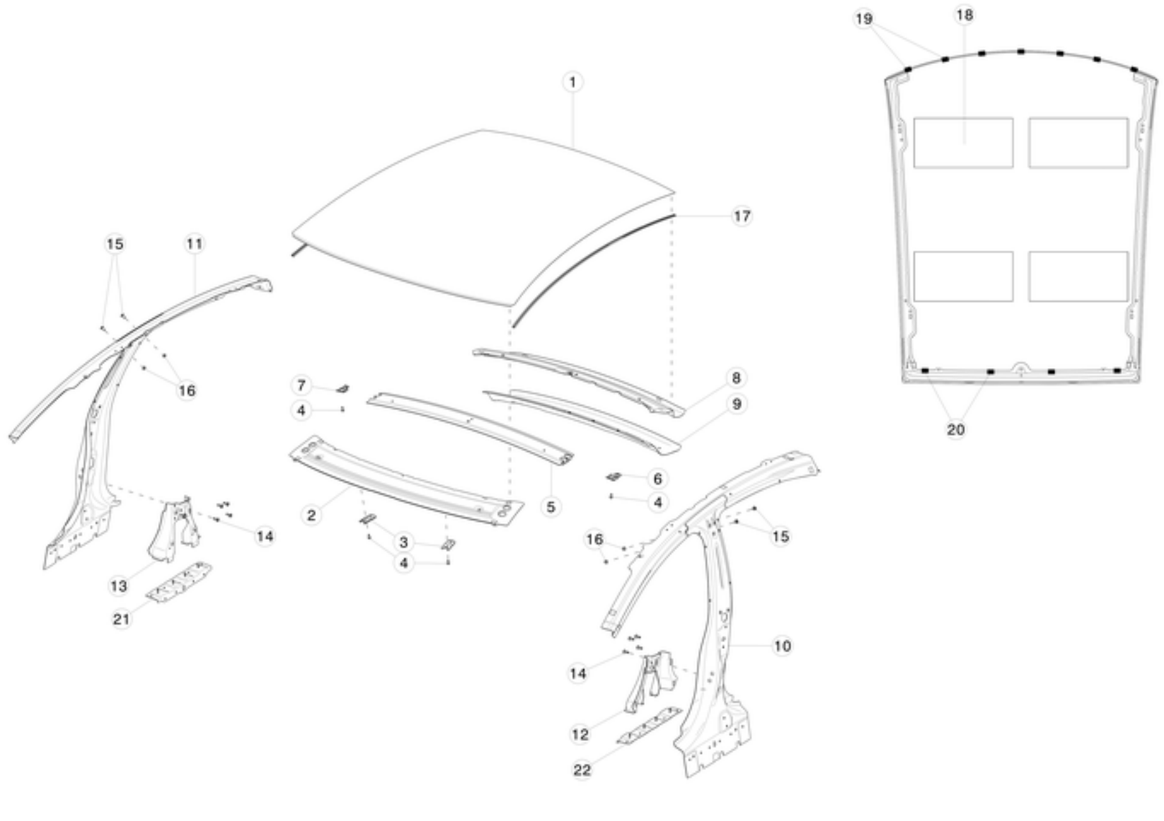

No	Part Name	Category	Part Description	Part Number	Qty	Comments
1	ASSY - ROOF COMP ECOATED	Unrestricted	ROOF ASSEMBLY	6008087-E0-E	1	Structural - Approved Body Shop Only.
2	ASY FR HEADER SVC	Unrestricted	FRONT HEADER ASSEMBLY	6006499-S0-C	1	Structural - Approved Body Shop Only
3	MDLS Fixed Glass Headliner Bracket	Unrestricted	MDLS Fixed Glass Headliner Bracket	1055686-00-A	2	Structural - Approved Body Shop Only
4	BOLT HF M6x14 PC88 MAT	Unrestricted	BOLT HF M6x14 PC88 MAT	1061503-00-A	4	Structural - Approved Body Shop Only
5	ASY-BOW ROOF B PILLAR SVC	Unrestricted	B-PILLAR ROOF BOW ASSEMBLY	1008501-S0-C	1	Structural - Approved Body Shop Only
6	ASY B PILLAR HEADLINER BRKT LH	Unrestricted	ASY B PILLAR HEADLINER BRKT LH	1085036-00-E	1	Structural - Approved Body Shop Only
7	ASY B PILLAR HEADLINER BRKT RH	Unrestricted	ASY B PILLAR HEADLINER BRKT RH	1085037-00-E	1	Structural - Approved Body Shop Only
8	HEADER-RR UPR SVC	Unrestricted	REAR HEADER UPPER	6006503-S0-A	1	Structural - Approved Body Shop Only
9	ASY-RR HEADER LWR SVC	Unrestricted	REAR HEADER LOWER ASSEMBLY	6006502-S0-B	1	Structural - Approved Body Shop Only
10	ASSY - B PILLAR COMP LH SVC	Unrestricted	B-PILLAR COMPLETE ASSEMBLY LEFT	1024364-S0-C	1	OK to replace -A, must patch camera hole with butyl foil patch (1043439-00-A). Structural - Approved Body Shop Only. Must also order the following hardware: 1014747-00-A, 1008833-01-A, and 1006628-01-A.
11	ASSY - B PILLAR COMP RH SVC	Unrestricted	B-PILLAR COMPLETE ASSEMBLY RIGHT	1024363-S0-C	1	OK to replace -A, must patch camera hole with butyl foil patch (1043439-00-A). Structural - Approved Body Shop Only. Must also order the following hardware: 1014747-00-A, 1008833-01-A, and 1006628-01-A.
12	ASY - GUSSET B PILLAR INR, LH SVC	Unrestricted	B-PILLAR INNER GUSSET ASSEMBLY LEFT	6009410-S0-D	1	Structural - Approved Body Shop Only. Must also order the following hardware: 1014747-00-A.
13	ASY - GUSSET B PILLAR INR, RH SVC	Unrestricted	B-PILLAR INNER GUSSET ASSEMBLY RIGHT	6009412-S0-D	1	Structural - Approved Body Shop Only. Must also order the following hardware: 1014747-00-A.
14	BLT,TRX,PFLG,M8-1.25xTBD[9.8]-09	Unrestricted	BOLT M8x20 WITH MATPOINT	1014747-00-B	8	Use for B-pillar replacement. Items #14, 15, 16.
15	BLT PANFLG TRX M8-1.25x16[9.8]ZnAl BLK	Unrestricted	BOLT PANHEAD FLANGE TORX M8-1.25x16[9.8]ZINC ALUMINUM, BLACK	1008833-01-A	4	Use for B-pillar replacement. Items #14, 15, 16.

16	NUT,M8-1.25,HF,Steel[10],ZnAl,BLACK	Unrestricted	NUT,M8-1.25,STEEL,ZINC ALUMINUM, BLACK	1006628-01-A	4	Use for B-pillar replacement. Items #14, 15, 16. Order in quantities of 50; minimum order: 50.
17	SEAL, OUTER TRIM, BASE ROOF	Unrestricted	SEAL, OUTER TRIM, BASE ROOF	1037066-00-D	2	
18	BUTYL FOIL, 300X150, 2MM THICK	Unrestricted	BUTYL FOIL, 300X150, 2MM THICK	1004969-00-A	4	Cut to proper size.
19	BASE ROOF FRONT SPACER	Unrestricted	BASE ROOF FRONT SPACER	1021955-00-A	7	Use to install 1037066-00-A
20	BASE ROOF REAR SPACER	Unrestricted	BASE ROOF REAR SPACER	1021950-00-A	4	Use to install 1037066-00-A
21	ASY, GUSSET RAMP, B PILLAR INR RH	Unrestricted	ASY, GUSSET RAMP, B PILLAR INR RH	1066404-S0-A	1	Structural - Approved Body Shop Only.
22	ASY, GUSSET RAMP, B PILLAR INR LH	Unrestricted	ASY, GUSSET RAMP, B PILLAR INR LH	1066403-S0-A	1	Structural - Approved Body Shop Only.

Sill Components

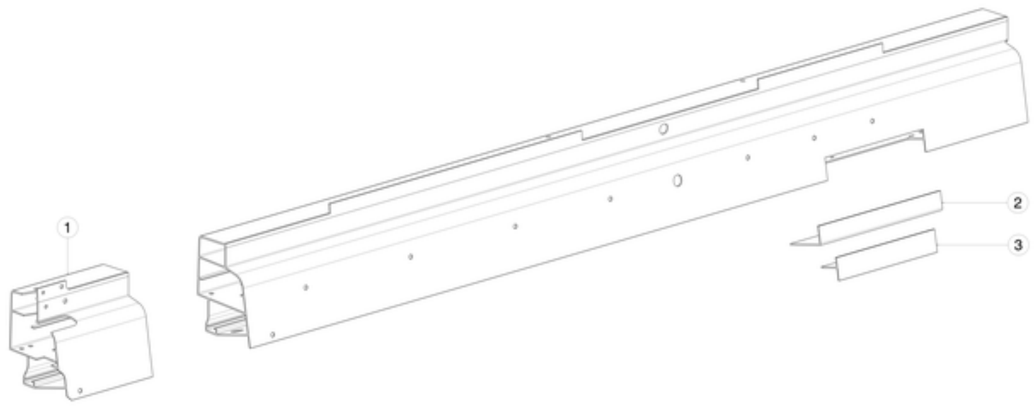

No	Part Name	Category	Part Description	Part Number	Qty	Comments
1	Kit, Front Sill Section, LH	Unrestricted	Kit, Front Sill Section, LH	1091218-00-A	1	Structural - Approved Body Shop Only.
1	Kit, Front Sill Section, RH	Unrestricted	Kit, Front Sill Section, RH	1092770-00-A	1	Structural - Approved Body Shop Only.
2	LOWER CELL REPAIR BACKING PLATE	Unrestricted	LOWER CELL REPAIR BACKING PLATE	1074922-00-A	1	Structural - Approved Body Shop Only.
3	LOWER CELL REPAIR SECTION	Unrestricted	LOWER CELL REPAIR SECTION	1074923-00-A	1	Structural - Approved Body Shop Only.
*	ASY SIDE SILL LH (REFRESH), SVC	Unrestricted	ASY SIDE SILL LH (REFRESH), SVC	6006765-S0-N	1	Structural - Approved Body Shop Only.
*	ASY SIDE SILL RH, SVC	Unrestricted	ASY SIDE SILL RH, SVC	6006768-S0-N	1	Structural - Approved Body Shop Only.

Structural Repair Consumables

No	Part Name	Category	Part Description	Part Number	Qty	Comments
*	STUD WLD AL GRD M8-1.25x26	Unrestricted	STUD WLD AL GRD M8-1.25x26	2007130-00-A	**	Structural - Approved Body Shop Only.
*	STUD,WLD,RND,M6-29.5[AL]CO	Unrestricted	STUD,WLD,RND,M6-29.5[AL]CO	1013806-00-A	**	Structural - Approved Body Shop Only.
*	STUD WLD AL FLG T5x15.5	Unrestricted	STUD WLD AL FLG T5x15.5	2007122-00-A	**	Structural - Approved Body Shop Only.
*	Rivet, 6.5MM, 2.0 - 9.5MM	Unrestricted	RIVET 6.5MM, 2.0 - 9.5MM	1028408-00-A	**	Structural - Approved Body Shop Only. Price and order is per individual rivet.Order only in multiples of 10.
*	Str.Cmnn Riv 6.5 Kit Stl Zn 3-13.5 Qty1	Unrestricted	RIVET 6.5MM, 3.013.5MM	1062559-00-A	**	Structural - Approved Body Shop Only. Price and order is per individual rivet.Order only in multiples of 10.
*	Rivet, 6.5MM, 2.0-15.9MM	Unrestricted	RIVET 6.5MM, 2.0-15.9MM	1028409-00-A	**	Structural - Approved Body Shop Only. Price and order is per individual rivet.Order only in multiples of 10.
*	Rivet, 4.8MM, 1.6 - 6.9MM	Unrestricted	RIVET 4.8MM, 1.6 - 6.9MM	1028719-00-A	**	Structural - Approved Body Shop Only. Price and order is per individual rivet.Order only in multiples of 10.
*	Countersunk Rivet, 4.8mm, 2.03.1mm	Unrestricted	COUNTERSUNK RIVET 4.8MM, 2.03.1MM	1069308-00-A	**	Structural - Approved Body Shop Only. Price and order is per individual rivet.Order only in multiples of 10.
*	Countersunk Rivet, 4.8mm, 3.188.41mm	Unrestricted	COUNTERSUNK RIVET 4.8MM, 3.188.41MM	1069326-00-A	**	Structural - Approved Body Shop Only. Price and order is per individual rivet.Order only in multiples of 10.
*	Countersunk Rivet, 6.5mm, 4.0612.07mm	Unrestricted	COUNTERSUNK RIVET 6.5MM, 4.0612.07MM	1069327-00-A	**	Structural - Approved Body Shop Only. Price and order is per individual rivet.Order only in multiples of 10.
*	Lrg Flng Riv6.5 Kit Stl Zn 2-15.9 Qty1	Unrestricted	FLANGE RIVET 6.5MM, 2.015.9MM	1062558-00-A	**	Structural - Approved Body Shop Only. Price and order is per individual rivet.Order only in multiples of 10.
*	Bulb Rivet, 6.5mm, 2.04.5mm	Unrestricted	BULB RIVET 6.5MM, 2.04.5MM	1063943-00-A	**	Structural - Approved Body Shop Only. Price and order is per individual rivet.Order only in multiples of 10.
*	BOM5/16 Kit Stl Zinc Grip7.95-11.1 Qty:1	Unrestricted	BOM, 5/16 IN (7.9MM) KIT, 7.9511.10MM	1062555-00-A	**	Structural - Approved Body Shop Only. Price and order is per individual rivet.Order only in multiples of 5..
*	Pin AND Collar 5/16 Kit Stl Znc 3.2-19.1 Qty1	Unrestricted	PIN AND COLLAR, 5/16 IN (7.9MM) KIT, 3.219.1MM	1062556-00-A	**	Structural - Approved Body Shop Only. Price and order is per individual rivet.Order only in multiples of 5..
*	Pin AND Collar 1/4Kit Stl Zinc 1.6-15.9 Qty1	Unrestricted	PIN AND COLLAR, 1/4 IN (6.5MM) KIT, 2.015.9MM	1062557-00-A	**	Structural - Approved Body Shop Only. Price and order is per individual rivet.Order only in multiples of 5..
*	SPR Rivet C 5x4 H4 SKR	Unrestricted	SELF-PIERCING RIVET C 5X4 H4 SKR	1026936-00-A	**	Structural - Approved Body Shop Only. Price and order is per individual rivet.Order only in multiples of 10.

*	SPR Rivet C 5x4.5 H4 SKR	Unrestricted	SELF-PIERCING RIVET C 5X4.5 H4 SKR	1026938-00-A	**	Structural - Approved Body Shop Only. Price and order is per individual rivet.Order only in multiples of 10.
*	SPR Rivet C 5x5 H4 SKR	Unrestricted	SELF-PIERCING RIVET C 5X5 H4 SKR	1026939-00-A	**	Structural - Approved Body Shop Only. Price and order is per individual rivet.Order only in multiples of 10.
*	SPR Rivet C 5x6 H4 SKR	Unrestricted	SELF-PIERCING RIVET C 5X6 H4 SKR	1026940-00-A	**	Structural - Approved Body Shop Only. Price and order is per individual rivet.Order only in multiples of 10.
*	SPR Rivet C 5x6 H2 SKR	Unrestricted	SELF-PIERCING RIVET C 5X6 H2 SKR	1026941-00-A	**	Structural - Approved Body Shop Only. Price and order is per individual rivet.Order only in multiples of 10.
*	SPR Rivet C 5x6.5 H4 SKR	Unrestricted	SELF-PIERCING RIVET C 5X6.5 H4 SKR	1026942-00-A	**	Structural - Approved Body Shop Only. Price and order is per individual rivet.Order only in multiples of 10.
*	SPR Rivet C 5x7 H4 SKR	Unrestricted	SELF-PIERCING RIVET C 5X7 H4 SKR	1026943-00-A	**	Structural - Approved Body Shop Only. Price and order is per individual rivet.Order only in multiples of 10.
*	SPR Rivet K 5x8 H4 SKR	Unrestricted	SELF-PIERCING RIVET K 5X8 H4 SKR	1026944-00-A	**	Structural - Approved Body Shop Only. Price and order is per individual rivet.Order only in multiples of 10.
*	SPR Rivet P 5x8 H4 SK	Unrestricted	SELF-PIERCING RIVET P 5X8 H4 SK	1026945-00-A	**	Structural - Approved Body Shop Only. Price and order is per individual rivet.Order only in multiples of 10.
*	SPR Rivet K 5x9 H4 SKR	Unrestricted	SELF-PIERCING RIVET K 5X9 H4	1028629-00-A	**	Structural - Approved Body Shop Only. Price and order is per individual rivet.Order only in multiples of 10.
*	Flw Frm Rvt,S08Kit-8mmSt.Stl 1.3-2.5Qty1	Unrestricted	FLOW FORM RIVET S08 KIT 8MM, 1.32.5MM	1069328-00-A	**	Structural - Approved Body Shop Only. Price and order is per individual rivet.Order only in multiples of 10.
*	Flw Frm Rvt,S18Kit-8mmSt.Stl 2.3-5.5Qty1	Unrestricted	FLOW FORM RIVET S18 KIT 8MM, 2.33.5MM	1069329-00-A	**	Structural - Approved Body Shop Only. Price and order is per individual rivet.Order only in multiples of 10.
*	Flw Frm Rvt,S28Kit-8mmSt.Stl3.35-4.1Qty1	Unrestricted	FLOW FORM RIVET S28 KIT 8MM, 3.354.10MM	1069330-00-A	**	Structural - Approved Body Shop Only. Price and order is per individual rivet.Order only in multiples of 10.
*	Flw Frm Rvt,S38Kit-8mmSt.Stl4.0-5.15Qty1	Unrestricted	FLOW FORM RIVET S38 KIT 8MM, 4.05.15MM	1069331-00-A	**	Structural - Approved Body Shop Only. Price and order is per individual rivet.Order only in multiples of 10.
*	Flw Frm Rvt,S48Kit-8mmSt.Stl 5.0-6.1Qty1	Unrestricted	FLOW FORM RIVET S48 KIT 8MM, 5.06.1MM	1069332-00-A	**	Structural - Approved Body Shop Only. Price and order is per individual rivet.Order only in multiples of 10.
*	Flw Frm Rvt,S58Kit-8mmSt.Stl 6.0-7.2Qty1	Unrestricted	FLOW FORM RIVET S58 KIT 8MM, 6.07.2MM	1069333-00-A	**	Structural - Approved Body Shop Only. Price and order is per individual rivet.Order only in multiples of 10.
*	Flw Frm Rvt,S68Kit-8mmSt.Stl 7.1-8.3Qty1	Unrestricted	FLOW FORM RIVET S68 KIT 8MM, 7.18.3MM	1069334-00-A	**	Structural - Approved Body Shop Only. Price and order is per individual rivet.Order only in multiples of 10.
*	STRUCTURAL ADHESIVE, FUSOR 2098	Unrestricted	FUSOR 2098 STRUCTURAL ADHESIVE	1062697-00-A	**	Structural - Approved Body Shop Only.
*	Aluminum MIG Wire Spool 5-pound spool (8")	Unrestricted	ER4145 ALUMINUM WELDING WIRE, 1.2 MM (.045 IN) DIAMETER, 5 LB. SPOOL	1022767-00-A	1	Structural - Approved Body Shop Only
*	5mm SPR Die-SM 110 0108	Unrestricted	5 MM SPR DIE-SM 110 0108	1045184-00-A	**	Structural - Approved Body Shop Only. Use with SPR rivet tool.
*	5mm SPR Die-SM 085 0125	Unrestricted	5 MM SPR DIE-SM 085 0125	1045185-00-A	**	Structural - Approved Body Shop Only. Use with SPR rivet tool.
*	5mm SPR Die-SM 120 0050	Unrestricted	5 MM SPR DIE-SM 120 0050	1045186-00-A	**	Structural - Approved Body Shop Only. Use with SPR rivet tool.
*	5mm SPR Die-SM 100 0111	Unrestricted	5 MM SPR DIE-SM 100 0111	1045187-00-A	**	Structural - Approved Body Shop Only. Use with SPR rivet tool.
*	5mm SPR Die-FM 090 2120	Unrestricted	5 MM SPR DIE-FM 090 2120	1045188-00-A	**	Structural - Approved Body Shop Only. Use with SPR rivet tool.
*	5mm SPR Die-FM 100 2022	Unrestricted	5 MM SPR DIE-FM 100 2022	1045189-00-A	**	Structural - Approved Body Shop Only. Use with SPR rivet tool.
*	5mm SPR Die-KA 075 2113	Unrestricted	5 MM SPR DIE-KA 075 2113	1045190-00-A	**	Structural - Approved Body Shop Only. Use with SPR rivet tool.
*	5mm SPR Die- SM 070 0056	Unrestricted	5 MM SPR DIE-SM 070 0056	1045191-00-A	**	Structural - Approved Body Shop Only. Use with SPR rivet tool.
*	Short Adapter Extension-Bollhoff-Service	Unrestricted	SHORT ADAPTER EXTENSION-BOLLHOFF-SERVICE	1062798-00-A	**	Structural - Approved Body Shop Only. Use with SPR rivet tool.
*	Long Adapter Extension-Bollhoff-Service	Unrestricted	LONG ADAPTER EXTENSION-BOLLHOFF-SERVICE	1062799-00-A	**	Structural - Approved Body Shop Only. Use with SPR rivet tool.
*	Bollhoff SPR Die Storage Case-Service	Unrestricted	BOLLHOFF SPR DIE STORAGE CASE-SERVICE	1062797-00-A	**	Structural - Approved Body Shop Only. Use with SPR rivet tool.
*	1mm ALU welding coupons 2in x 5in	Unrestricted	ALU WELDING COUPONS	1072667-00-A	**	Structural - Approved Body Shop Only. Order by package quantity - 1 package contains 100 coupons. Do not use to repair Tesla vehicles.
*	2.5mm ALU welding coupons 3in x 10in	Unrestricted	ALU WELDING COUPONS	1072669-00-A	**	Structural - Approved Body Shop Only. Order by package quantity - 1 package contains 100 coupons. Do not use to repair Tesla vehicles.
*	INSTAPACK SIZE 80, UWCA374PRT40	Unrestricted	INSTAPACK SIZE 80, UWCA374PRT40	1046403-00-A	**	
*	SPAC NUT,M8x2.8-3.5,STL[10]	Unrestricted	SPAC NUT,M8x2.8-3.5,STL[10]	1071915-00-A	**	

BUMPER AND FASCIA

Front Bumper Carrier

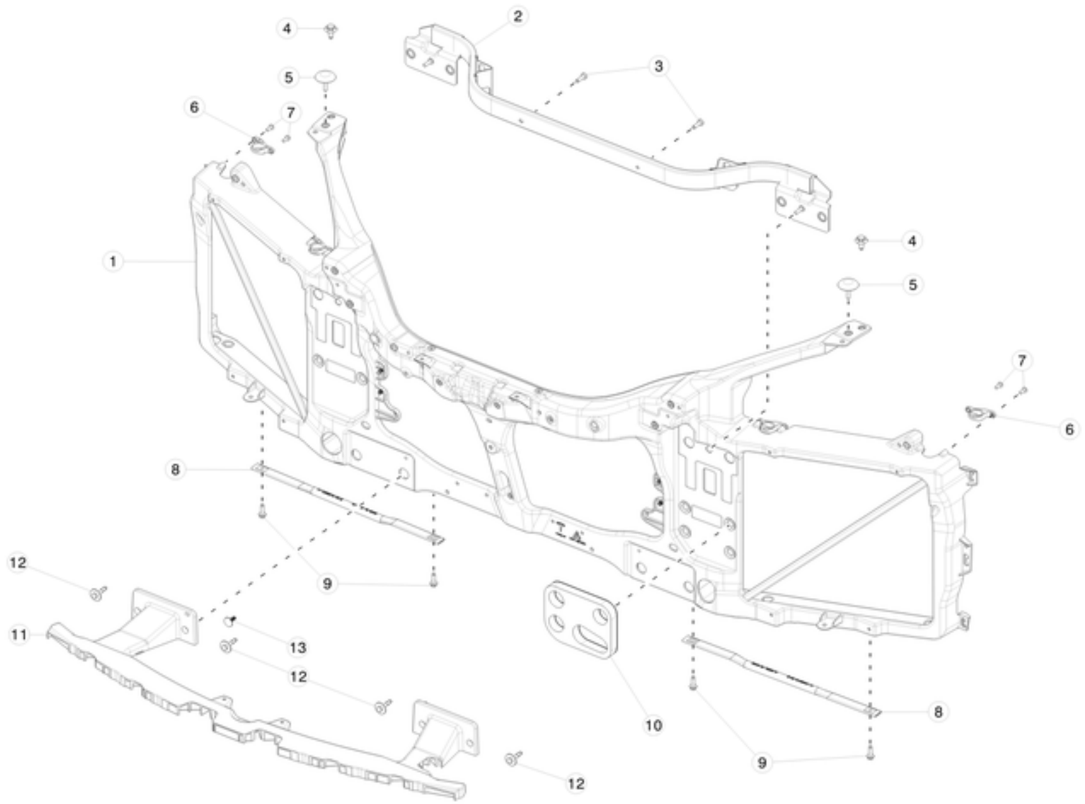

No	Part Name	Category	Part Description	Part Number	Qty	Comments
1	FRONT END CARRIER, MS2	Unrestricted	FRONT END CARRIER, MS2	1061950-00-E	1	
2	TUBE, REINFORCEMENT, FRONT CARRIER	Unrestricted	TUBE, REINFORCEMENT, FRONT CARRIER	1046338-00-C	1	
3	BLT TRX MP M6-1.00x20 D12 [8.8] ZnAL	Unrestricted	BLT TRX MP M6-1.00x20 D12 [8.8] ZnAL	1005814-00-A	2	
4	BLT,HEX,FLG,M8-1.25x20x24[8.8]-09	Unrestricted	BLT,HEX,FLG,M8-1.25x20x24[8.8]-09	1016260-00-A	2	
5	BUMPER, HOOD CLOSURE, 6MM	Unrestricted	BUMPER, HOOD CLOSURE, 6MM	1012602-00-E	2	
6	CONDENSER BRACKET	Unrestricted	CONDENSER BRACKET	1006201-00-B	4	
7	SCR,M5-1.8X14,SCKT PAN WSHR HD,TORX,SST	Unrestricted	SCR,M5-1.8X14,SCKT PAN WSHR HD,TORX,SST	1006533-00-A	8	
8	STAY BAR	Unrestricted	STAY BAR	1038910-00-B	2	
9	BLT HF M6-1.00x20[8.8]ZnAlW	Unrestricted	BLT HF M6-1.00x20[8.8]ZnAlW	1009420-00-A	4	
10	GASKET	Unrestricted	GASKET	1063065-00-B	1	
11	ANKLE CATCHER MS2	Unrestricted	ANKLE CATCHER	1056837-00-C	1	
12	BLT,HEX,M6-1.00x30[8.8]-S-M-09	Unrestricted	BLT,HEX,M6-1.00x30[8.8]-S-M-09	1022543-00-B	4	
13	BRUSH CLIP 5MM - 22.20MM	Unrestricted	BRUSH CLIP 5MM - 22.20MM	1009399-00-A	1	

Front Bumper Fascia

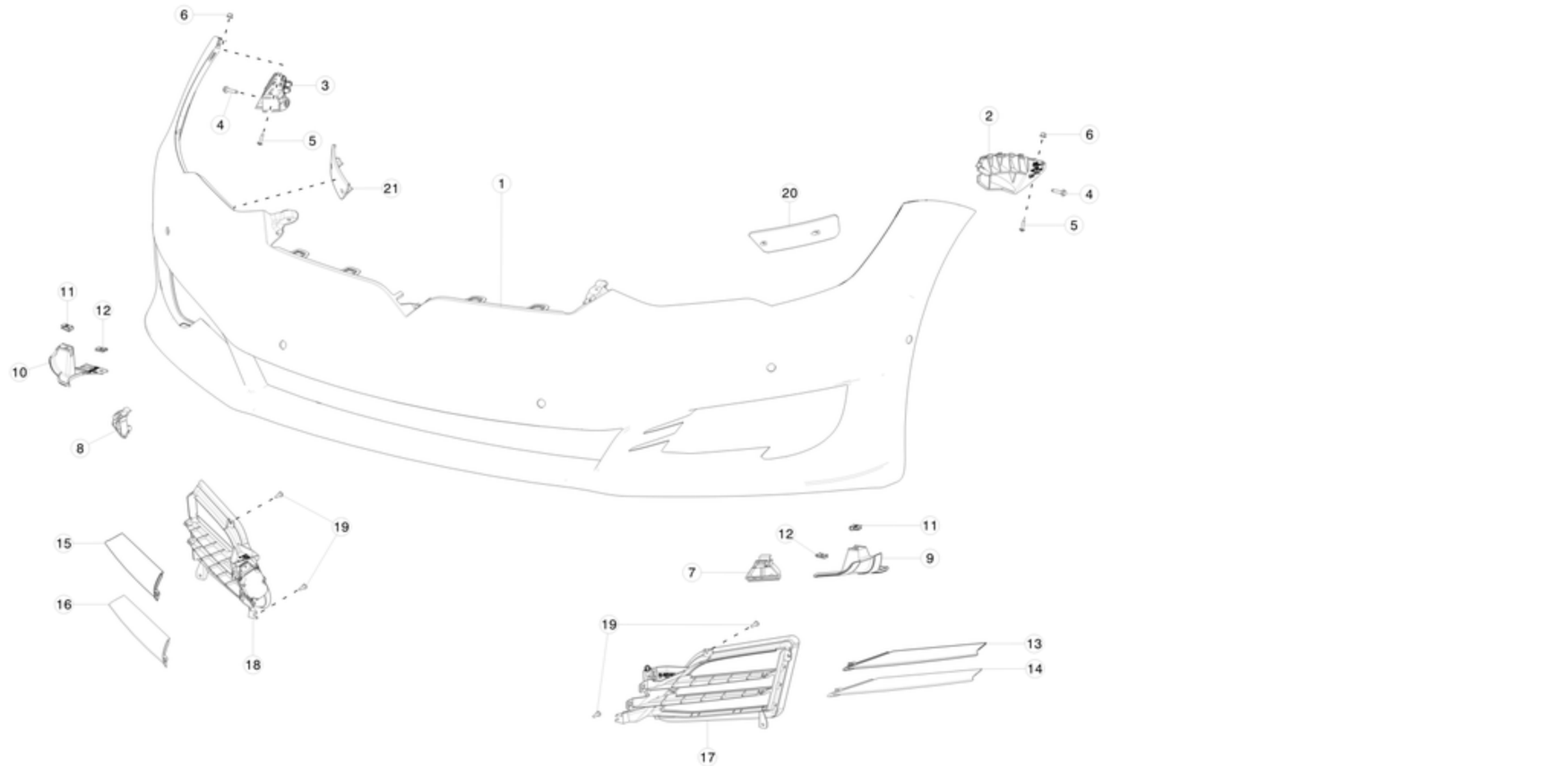

No	Part Name	Category	Part Description	Part Number	Qty	Comments
1	FR FASCIA ASY MS2	Unrestricted	FRONT FASCIA ASSEMBLY WITHOUT PAINT	1077925-S0-A	1	Includes items #2 and 3. For vehicles manufactured before October 12,2016
1	FR FASCIA ASY MS2, AUTOPILOT	Unrestricted	FRONT FASCIA ASSEMBLY WITHOUT PAINT, AUTOPILOT	1056370-S0-A	1	For vehicles manufactured on or after October 12, 2016.
2	BRKT - FENDER - FR FASCIA, LH	Unrestricted	FRONT FASCIA FENDER BRACKET - LEFT	6005888-99-D	1	
3	BRKT - FENDER - FR FASCIA, RH	Unrestricted	FRONT FASCIA FENDER BRACKET - RIGHT	6008821-99-D	1	
4	BLT HEX M6-1.00x25 [8.8] M ZINC ALUMINUM	Unrestricted	BLT HEX M6-1.00x25 [8.8] M ZINC ALUMINUM	1005817-00-A	2	
5	BLT,TPG,TRX,PLFG,M5-DPTx22[St]-RND-10	Unrestricted	BOLT, TORX , M5x22	1006534-00-A	2	
6	SCR GROM SQR M5x8x7.5	Unrestricted	SCREW GROMMET SQUARE M5x8x7.5	1006522-00-A	2	
7	FASCIA TAB REINFORCE, FR LH	Unrestricted	FRONT FASCIA REINFORCE TAB, LEFT	1072913-00-B	1	
8	FASCIA TAB REINFORCE, FR RH	Unrestricted	FRONT FASCIA REINFORCE TAB, RIGHT	1072914-00-B	1	
9	BRKT ASY FASC WHL ARCH LWR TAPE LH MS2	Unrestricted	FASCIA BRACKET ASSEMBLY LOWER WHEEL ARCH TAPE ON- LEFT	1074903-00-C	1	OK to use or replace 1074903-00-B.
10	BRKT ASY FASC WHL ARCH LWR TAPE RH MS2	Unrestricted	FASCIA BRACKET ASSEMBLY LOWER WHEEL ARCH TAPE ON- RIGHT	1074904-00-C	1	OK to use or replace 1074904-00-B.
11	CLIP, M6,BUR100015	Unrestricted	CLIP, M6,BUR100015	1013802-00-B	1	
12	U-NUT M6x0.6-3.5	Unrestricted	U-NUT M6x0.6-3.5	1006518-00-A	2	
13	FOG SPEAR UPR LH, FR FASCIA MS2	Unrestricted	FRONT FASCIA FOG SPEAR - UPPER LEFT - CHROME	1056378-00-C	1	
13	FOG SPEAR UPR LH, FR FASCIA (MS2) BLACK	Unrestricted	FRONT FASCIA FOG SPEAR - UPPER LEFT - BLACK	1079634-00-A	1	
14	FOG SPEAR LWR LH, FR FASCIA MS2	Unrestricted	FRONT FASCIA FOG SPEAR - LOWER LEFT - CHROME	1056379-00-C	1	

14	FOG SPEAR LWR LH, FR FASCIA (MS2) BLACK	Unrestricted	FRONT FASCIA FOG SPEAR - LOWER LEFT - BLACK	1079635-00-A	1	
15	FOG SPEAR UPR RH, FR FASCIA, MS2	Unrestricted	FRONT FASCIA FOG SPEAR - UPPER RIGHT - CHROME	1056380-00-C	1	
15	FOG SPEAR UPR RH, FR FASCIA (MS2) BLACK	Unrestricted	FRONT FASCIA FOG SPEAR - UPPER RIGHT - BLACK	1079636-00-A	1	
16	FOG SPEAR LWR RH, FRONT FASCIA MS2	Unrestricted	FRONT FASCIA FOG SPEAR - LOWER RIGHT - CHROME	1056381-00-C	1	
16	FOG SPEAR LWR RH, FR FASCIA (MS2) BLACK	Unrestricted	FRONT FASCIA FOG SPEAR - LOWER RIGHT - BLACK	1079638-00-A	1	
17	ASY, ACTIVE LOUVRE LH MS2	Unrestricted	ACTIVE LOUVRE ASSEMLY - LEFT	1057851-00-I	1	
18	ASY, ACTIVE LOUVRE RH, MS2	Unrestricted	ACTIVE LOUVRE ASSEMLY - RIGHT	1058007-00-I	1	
19	SCR ST WSHR M5 X 20 ZnNi	Unrestricted	SCR ST WSHR M5 X 20 ZnNi	1012809-00-A	4	
20	BRKT, FR FOG LAMP, LH (MS2)	Unrestricted	FRONT FOG LAMP BRACKET - LEFT	1059979-00-B	1	
21	BRKT, FR FOG LAMP, RH (MS2)	Unrestricted	FRONT FOG LAMP BRACKET - RIGHT	1059980-00-B	1	

Front Energy Absorber

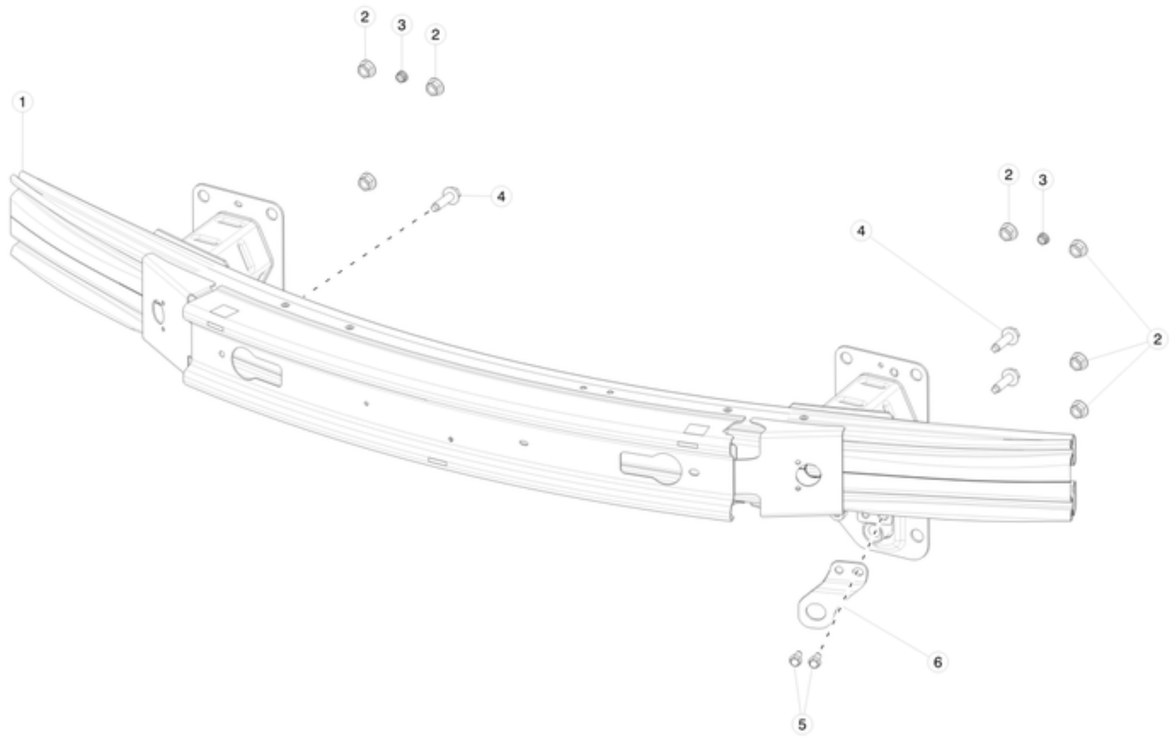

No	Part Name	Category	Part Description	Part Number	Qty	Comments
1	ASSY - AWD BUMPER SYSTEM FR NA	Unrestricted	FRONT BUMPER SYSTEM - NORTH AMERICA	1060976-00-D	1	
1	ASSY - AWD BUMPER SYSTEM FR NA	Unrestricted	FRONT BUMPER SYSTEM - NORTH AMERICA	1060976-00-D	1	
1	ASSY - AWD BUMPER SYSTEM FR NA	Unrestricted	FRONT BUMPER SYSTEM - NORTH AMERICA	1060976-00-D	1	
1	ASSY - AWD BUMPER SYSTEM FR NA	Unrestricted	FRONT BUMPER SYSTEM - NORTH AMERICA	1060976-00-D	1	
1	ASSY - AWD BUMPER SYSTEM FR NA	Unrestricted	FRONT BUMPER SYSTEM - NORTH AMERICA	1060976-00-D	1	
1	ASSY - AWD BUMPER SYSTEM FR NA	Unrestricted	FRONT BUMPER SYSTEM - NORTH AMERICA	1060976-00-D	1	
2	NUT HF M10x1.5 ZnAl [10]	Unrestricted	NUT HF M10x1.5 ZnAl [10]	1006883-00-A	7	
2	NUT HF M10x1.5 ZnAl [10]	Unrestricted	NUT HF M10x1.5 ZnAl [10]	1006883-00-A	7	
2	NUT HF M10x1.5 ZnAl [10]	Unrestricted	NUT HF M10x1.5 ZnAl [10]	1006883-00-A	7	
2	NUT HF M10x1.5 ZnAl [10]	Unrestricted	NUT HF M10x1.5 ZnAl [10]	1006883-00-A	7	
2	NUT HF M10x1.5 ZnAl [10]	Unrestricted	NUT HF M10x1.5 ZnAl [10]	1006883-00-A	7	
2	NUT HF M10x1.5 ZnAl [10]	Unrestricted	NUT HF M10x1.5 ZnAl [10]	1006883-00-A	7	
3	NUT HF M6-1.00[8]ZnAl	Unrestricted	NUT HF M6-1.00[8]ZnAl	2007207	2	
3	NUT HF M6-1.00[8]ZnAl	Unrestricted	NUT HF M6-1.00[8]ZnAl	2007207	2	
3	NUT HF M6-1.00[8]ZnAl	Unrestricted	NUT HF M6-1.00[8]ZnAl	2007207	2	
3	NUT HF M6-1.00[8]ZnAl	Unrestricted	NUT HF M6-1.00[8]ZnAl	2007207	2	
3	NUT HF M6-1.00[8]ZnAl	Unrestricted	NUT HF M6-1.00[8]ZnAl	2007207	2	

3	NUT HF M6-1.00[8]ZnAl	Unrestricted	NUT HF M6-1.00[8]ZnAl	2007207	2	
4	BOLT HF M10x35 PC109 MAT	Unrestricted	BOLT HF M10x35 PC109 MAT	1054401-00-A	2	
4	BOLT HF M10x35 PC109 MAT	Unrestricted	BOLT HF M10x35 PC109 MAT	1054401-00-A	2	
4	BOLT HF M10x35 PC109 MAT	Unrestricted	BOLT HF M10x35 PC109 MAT	1054401-00-A	2	
4	BOLT HF M10x35 PC109 MAT	Unrestricted	BOLT HF M10x35 PC109 MAT	1054401-00-A	2	
4	BOLT HF M10x35 PC109 MAT	Unrestricted	BOLT HF M10x35 PC109 MAT	1054401-00-A	2	
4	BOLT HF M10x35 PC109 MAT	Unrestricted	BOLT HF M10x35 PC109 MAT	1054401-00-A	2	
5	BLT,M8x16,M6 HF, [10.9],ZnAl,HD,OD14.9	Unrestricted	BLT,M8x16,M6 HF,[10.9],ZnAl,HD,OD14.9	1011818-00-A	2	
5	BLT,M8x16,M6 HF, [10.9],ZnAl,HD,OD14.9	Unrestricted	BLT,M8x16,M6 HF,[10.9],ZnAl,HD,OD14.9	1011818-00-A	2	
5	BLT,M8x16,M6 HF, [10.9],ZnAl,HD,OD14.9	Unrestricted	BLT,M8x16,M6 HF,[10.9],ZnAl,HD,OD14.9	1011818-00-A	2	
5	BLT,M8x16,M6 HF, [10.9],ZnAl,HD,OD14.9	Unrestricted	BLT,M8x16,M6 HF,[10.9],ZnAl,HD,OD14.9	1011818-00-A	2	
5	BLT,M8x16,M6 HF, [10.9],ZnAl,HD,OD14.9	Unrestricted	BLT,M8x16,M6 HF,[10.9],ZnAl,HD,OD14.9	1011818-00-A	2	
5	BLT,M8x16,M6 HF, [10.9],ZnAl,HD,OD14.9	Unrestricted	BLT,M8x16,M6 HF,[10.9],ZnAl,HD,OD14.9	1011818-00-A	2	
6	TOW HOOK SUPPORTING BRACKET BOTTOM, MS2	Unrestricted	TOW HOOK SUPPORTING BRACKET BOTTOM, MS2	1073170-00-C	1	
6	TOW HOOK SUPPORTING BRACKET BOTTOM, MS2	Unrestricted	TOW HOOK SUPPORTING BRACKET BOTTOM, MS2	1073170-00-C	1	
6	TOW HOOK SUPPORTING BRACKET BOTTOM, MS2	Unrestricted	TOW HOOK SUPPORTING BRACKET BOTTOM, MS2	1073170-00-C	1	
6	TOW HOOK SUPPORTING BRACKET BOTTOM, MS2	Unrestricted	TOW HOOK SUPPORTING BRACKET BOTTOM, MS2	1073170-00-C	1	
6	TOW HOOK SUPPORTING BRACKET BOTTOM, MS2	Unrestricted	TOW HOOK SUPPORTING BRACKET BOTTOM, MS2	1073170-00-C	1	
6	TOW HOOK SUPPORTING BRACKET BOTTOM, MS2	Unrestricted	TOW HOOK SUPPORTING BRACKET BOTTOM, MS2	1073170-00-C	1	

Front Grille and Applique

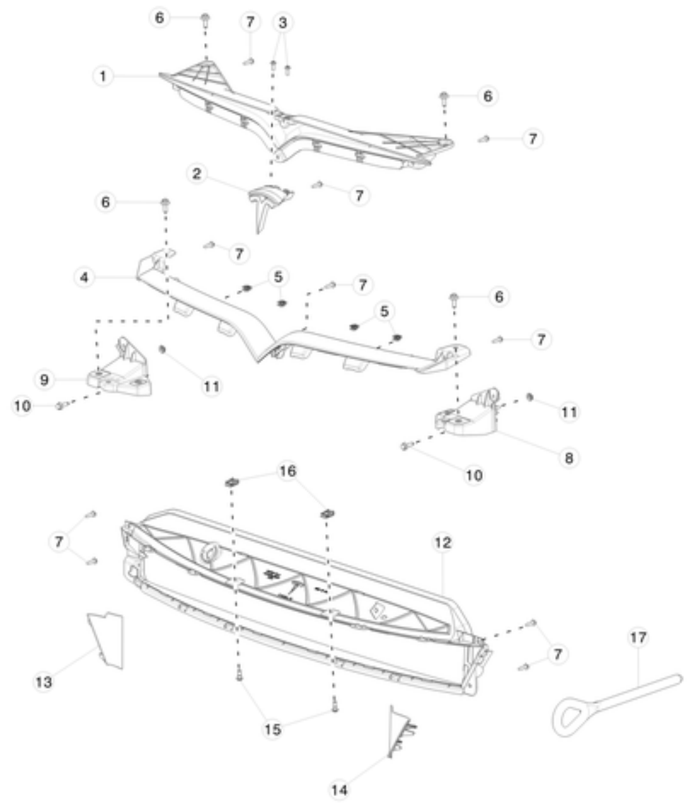

No	Part Name	Category	Part Description	Part Number	Qty	Comments
1	TESLA BADGE 'T'-FRONT SUPPORT	Unrestricted	T BADGE SUPPORT	1062472-00-E	1	
2	TESLA BADGE 'T'-FRONT	Unrestricted	TESLA BADGE 'T' FRONT	1056386-00-F	1	
3	SCR,M5-1.8X14,SCKT PAN WSHR HD,TORX,SST	Unrestricted	SCR,M5-1.8X14,SCKT PAN WSHR HD,TORX,SST	1006533-00-A	2	
4	V-BAR SUB ASSY MS2	Unrestricted	FRONT UPPER GRILLE BRIGHT TRIM	1065233-00-C	1	
5	EDGE CLIP,6x20 HOLE,14.5x1.3 RIB	Unrestricted	EDGE CLIP,6x20 HOLE,14.5x1.3 RIB	1062645-00-A	4	
6	BLT HF M6x1.00x18 [8.8]-D-ZnAl-W	Unrestricted	BLT HF M6x1.00x18 [8.8]-D-ZnAl-W	1006529-00-A	4	
7	SCR ST WSHR M5 X 20 ZnNi	Unrestricted	SCR ST WSHR M5 X 20 ZnNi	1012809-00-A	9	
8	FASCIA SUPPORT BRACKET MS2 LH	Unrestricted	FASCIA SUPPORT BRACKET - LEFT	1061331-00-B	1	
9	FASCIA SUPPORT BRACKET MS2 RH	Unrestricted	FASCIA SUPPORT BRACKET - RIGHT	1061332-00-B	1	
10	BLT HF M6-1.00x20[8.8]ZnAlW	Unrestricted	BLT HF M6-1.00x20[8.8]ZnAlW	1009420-00-A	2	
11	PALNUT TYPE-SD M5x10-15	Unrestricted	PALNUT TYPE-SD M5x10-15	1009338-00-A	2	
12	GRILLE COVER UPR, FR FASCIA MS2	Unrestricted	FRONT FASCIA UPPER GRILLE COVER	1057847-00-D	1	
13	GRILLE COVER RH, FR FASCIA MS2	Unrestricted	FRONT FASCIA GRILLE COVER - RIGHT	1057850-00-B	1	
14	TOW HOOK COVER, FR FASCIA MS2	Unrestricted	TOW HOOK COVER	1057845-00-C	1	
15	SCREW-M6-1.0X18.5,5 LOBE EX TORX	Unrestricted	SCREW-M6-1.0X18.5,5 LOBE EX TORX	1055832-00-B	2	
16	CLIP, M6,BUR100015	Unrestricted	CLIP, M6,BUR100015	1013802-00-B	2	

17	TOW HOOK, MODEL S 2	Unrestricted	TOW HOOK	1060646-00-A	1	

Rear Bumper Fascia

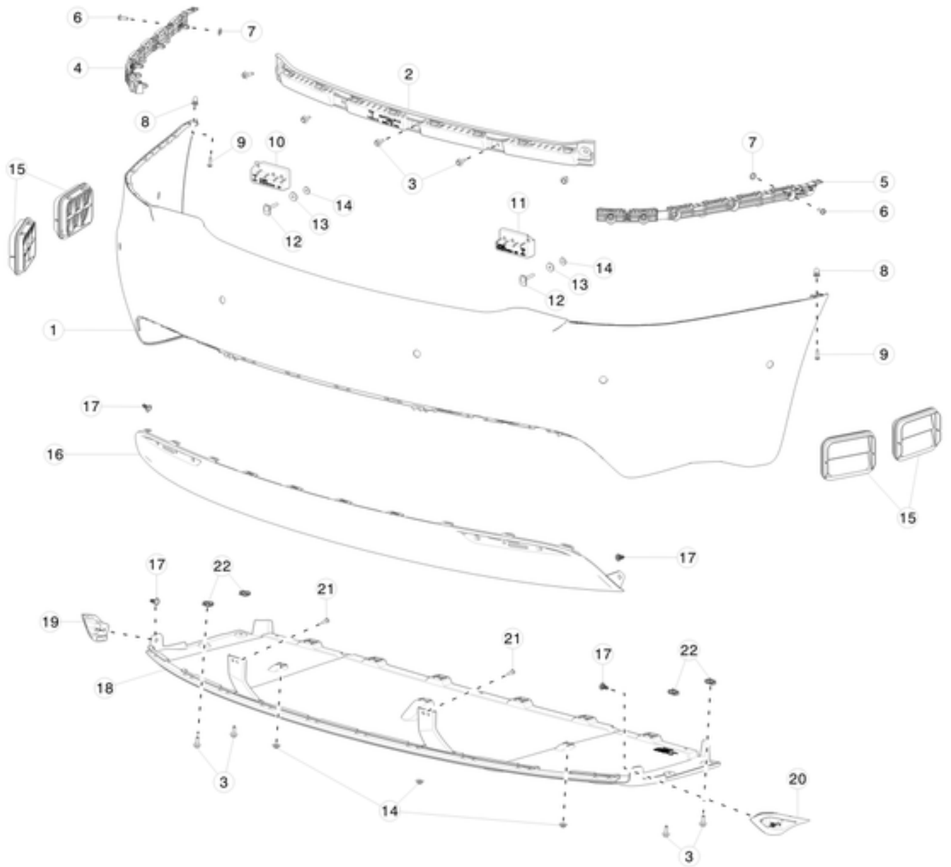

No	Part Name	Category	Part Description	Part Number	Qty	Comments
1	PLASTICS SUB - RR FASCIA W/O PAINT, MS2	Unrestricted	PLASTICS SUB - RR FASCIA W/O PAINT, MS2	1077926-S0-A	1	
1	RR FASCIA, MS2, AUTOPILOT, SVC	Unrestricted	REAR FASCIA, MS2, AUTOPILOT, SVC	1057319-S0-A	1	For vehicles manufactured on or after October 12, 2016.
2	BRKT - BODY ATTACHMENT FASCIA RR	Unrestricted	BRKT - BODY ATTACHMENT FASCIA RR	6007724-00-E	1	
3	BLT HF M6x1.00x18 [8.8]-D-ZnAl-W	Unrestricted	BLT HF M6x1.00x18 [8.8]-D-ZnAl-W	1006529-00-A	9	
4	BRKT - WING FASCIA RR, LH	Unrestricted	BRKT - WING FASCIA RR, LH	1010758-00-D	1	
5	BRKT - WING FASCIA RR, RH	Unrestricted	BRKT - WING FASCIA RR, RH	1010757-00-D	1	
6	SCR ST WSHR M6x20 ZnAl	Unrestricted	SCR ST WSHR M6x20 ZnAl	1006539-00-A	10	
7	SEAL, WING BRKT, RR FASCIA	Unrestricted	SEAL, WING BRKT, RR FASCIA	1008274-00-B	1	
8	SCR GROM SQR M5x8.5x17	Unrestricted	SCR GROM SQR M5x8.5x17	1006537-00-A	2	
9	BLT,TPG,TRX,PLFG,M5-DPTx22[St]-RND-10	Unrestricted	BLT,TPG,TRX,PLFG,M5-DPTx22[St]-RND-10	1006534-00-A	2	
10	HANGER BRKT LH, RR FASCIA	Unrestricted	HANGER BRKT LH, RR FASCIA	1042046-00-A	1	
11	HANGER BRKT RH, RR FASCIA	Unrestricted	HANGER BRKT RH, RR FASCIA	1042974-00-A	1	
12	NUTPLT 18x25-1.5,WLDSTD M6x1-40	Unrestricted	NUTPLT 18x25-1.5,WLDSTD M6x1-40	1007379-00-B	2	
13	SEAL, CENTER BRKT, REAR FASCIA	Unrestricted	SEAL, CENTER BRKT, REAR FASCIA	1008333-00-B	2	
14	NUT HF M6-1.00X18 (ZnAl)	Unrestricted	NUT HF M6-1.00X18 (ZnAl)	1006538-00-A	5	
15	AIR EXTRACTOR	Unrestricted	AIR EXTRACTOR	6007556	4	
16	TRIM, REAR FASCIA, MS2	Unrestricted	TRIM, REAR FASCIA, MS2	1057321-00-C	1	

17	RVT PUSH-PULL 8X18X20.0	Unrestricted	RVT PUSH-PULL 8X18X20.0	1006521-00-A	4	
18	DIFFUSER, MS2	Unrestricted	DIFFUSER, MS2	1057320-00-B	1	
19	BRKT, DIFFUSER, RR FASCIA LH	Unrestricted	BRKT, DIFFUSER, RR FASCIA LH	1082915-00-A	1	
20	BRKT, DIFFUSER, RR FASCIA RH MS2	Unrestricted	BRKT, DIFFUSER, RR FASCIA RH	1082916-00-A	1	
21	SCR ST WSHR M5 X 20 ZnNi	Unrestricted	SCR ST WSHR M5 X 20 ZnNi	1012809-00-A	2	
22	CLIP, M6,BUR100015	Unrestricted	CLIP, M6,BUR100015	1013802-00-B	4	
*	EDGE CLIP,90 DEG,3 WAY	Unrestricted	EDGE CLIP,90 DEG,3 WAY	1052754-00-C	4	Used to attach the rear fascia to the rear bumper cover

Rear Energy Absorber

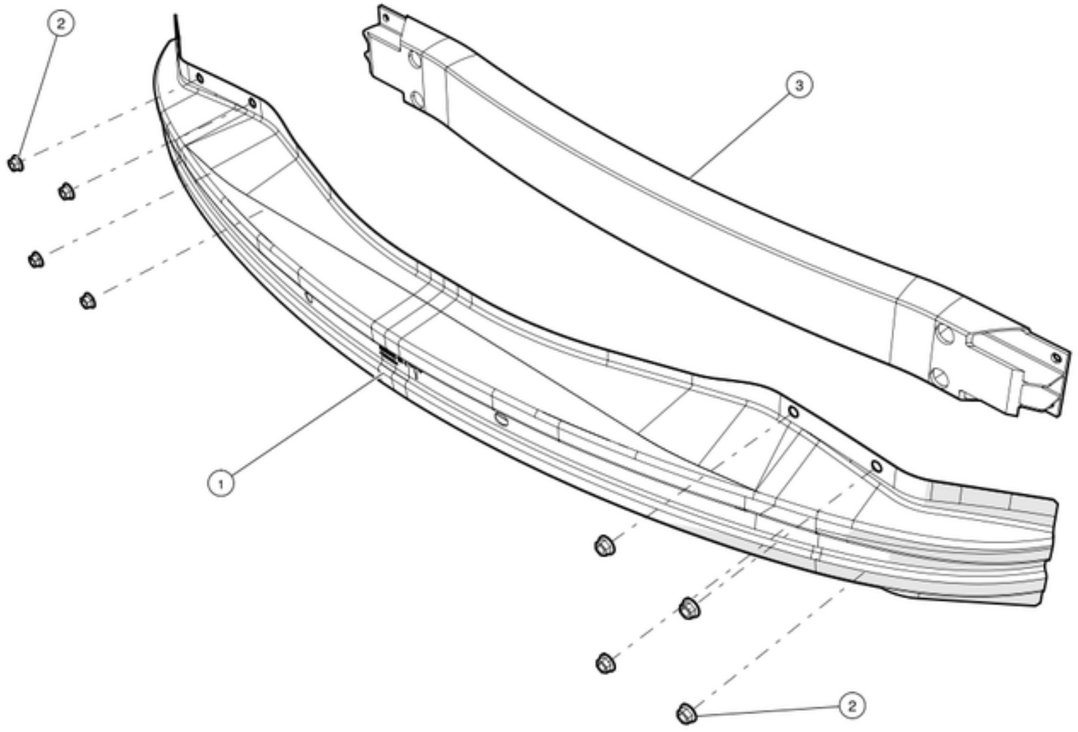

No	Part Name	Category	Part Description	Part Number	Qty	Comments
1	BUMPER BEAM, REAR	Unrestricted	REAR BUMPER BEAM	1041685-00-A	1	
2	NUT HF M10x1.5 ZnAl [10]	Unrestricted	NUT, M10x1.5 ZINC ALUMINUM	1006883-00-A	8	
3	REAR CROSSMEMBER SVC	Unrestricted	REAR CROSSMEMBER	1015811-S0-B	1	StructuralApproved Body Shop Only

WINDSHIELD, LIFTGATE GLASS, AND BODY GLASS

Front and Rear Door Glass

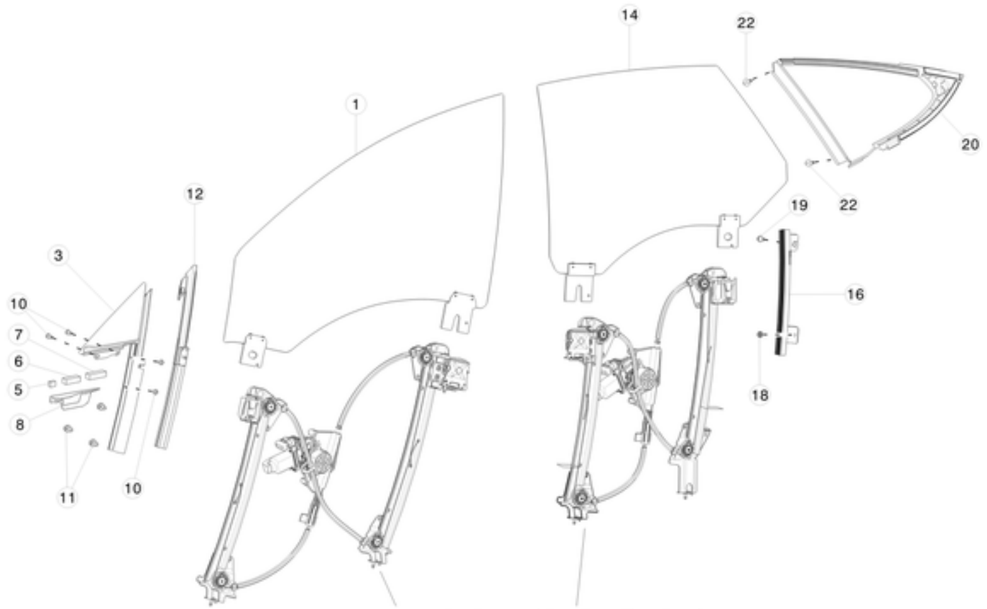

See Front and Rear Door Glass Regulator

No	Part Name	Category	Part Description	Part Number	Qty	Comments
1	GLASS-FR DOOR WINDOW LH	Unrestricted	GLASS-FRONT DOOR WINDOW LEFT	6006547-00-C	1	
2	GLASS-FR DOOR WINDOW RH	Unrestricted	GLASS-FRONT DOOR WINDOW RIGHT	6006647-00-C	1	
3	FIXED GLASS RUN ASSY - FR DOOR, LH	Unrestricted	FIXED GLASS RUN ASSEMBLY - FRONT DOOR, LEFT	6006644-00-J	1	
*	BRACKET, FRONT FIXED GLASS	Unrestricted	FRONT FIXED GLASS BRACKET	1032610-00-A	1	
*	BLT PAN TRX M6-1.00x13[] ZnAl	Unrestricted	BOLT TORX M6-1.00x13 ZINC ALUMINUM	1014663-00-A	2	Use to install bracket to item #3. Order in quantities of 50; minimum order: 50.
4	FIXED GLASS RUN ASSY - FR DOOR, RH	Unrestricted	FIXED GLASS RUN ASSEMBLY - FRONT DOOR, RIGHT	6006544-00-J	1	
*	BRACKET, FRONT FIXED GLASS	Unrestricted	FRONT FIXED GLASS BRACKET	1032610-00-A	1	
*	BLT PAN TRX M6-1.00x13[] ZnAl	Unrestricted	BOLT TORX M6-1.00x13 ZINC ALUMINUM	1014663-00-A	2	Use to install bracket to item #4. Order in quantities of 50; minimum order: 50.
5	FR FOAM FR QTR-GL	Unrestricted	FRONT FOAM, FRONT QUARTER GLASS	1038839-00-A	2	Service only. Order in quantities of 2; minimum order: 2.
6	MD FOAM FR QTR-GL	Unrestricted	MIDDLE FOAM, FRONT QUARTER GLASS	1038840-00-A	2	Service only
7	RR FOAM FR QTR-GL	Unrestricted	REAR FOAM, FRONT QUARTER GLASS	1038841-00-A	2	Service only
8	FIXED GLASS SEAL LH	Unrestricted	FIXED GLASS SEAL LEFT	1039364-00-A	2	Service only
9	FIXED GLASS SEAL RH	Unrestricted	FIXED GLASS SEAL RIGHT	1046148-00-A	2	Service only
10	BLT PAN TRX M6-1.00x13[] ZnAl	Unrestricted	BOLT TORX M6-1.00x13 ZINC ALUMINUM	1014663-00-A	8	Order in quantities of 50; minimum order: 50.
11	BLT HF M8-1.25x16 TLOB ZnAl	Unrestricted	BOLT M8-1.25x16 ZINC ALUMINUM	1006507-00-A	6	

12	SEAL, DOOR FRONT FIXED GLASS, LH	Unrestricted	SEAL, DOOR FRONT FIXED GLASS, LEFT	6009580-00-C	1	
13	SEAL, DOOR FRONT FIXED GLASS, RH	Unrestricted	SEAL, DOOR FRONT FIXED GLASS, RIGHT	6009607-00-C	1	
14	GLASS-RR DOOR WINDOW LH	Unrestricted	GLASS-REAR DOOR WINDOW LEFT	6006335-00-B	1	
15	GLASS-RR DOOR WINDOW RH	Unrestricted	GLASS-REAR DOOR WINDOW RIGHT	6006571-00-B	1	
18	NUT HF M6-1.00[8]ZnAl	Unrestricted	NUT M6-1.00 ZINC ALUMINUM	2007207	2	Order in quantities of 25; minimum order: 25.
19	BOLT, M6-1.0X12,FHCS,DIN6921,G10.9,ZF720	Unrestricted	BOLT M6-1.00x12,FHCS,DIN6921,G10.9,ZF720	1008770-00-A	2	OK to replace 2007220.
20	ASSY CHANNEL GLASS RR DOOR LH	Unrestricted	ASSEMBLY CHANNEL GLASS REAR DOOR LEFT	1051820-99-A	1	For cars before 5/11/17 will fit with bright molding 1039307-00-A or earlier.OK to use 6007188-00-I or newer and 1047191-00-A/B if 1051820-99-A is not available. For 6007188-00-I/J, remove the bottom piece of 3M tape cleanly and use urethane to bond the upper bright to it.
20	ASSY CHANNEL GLASS RR DOOR LH	Unrestricted	ASSEMBLY CHANNEL GLASS REAR DOOR LEFT	1051820-80-D	1	For cars on or after 5/11/17,will fit with the newer bright molding 1077351-00-C or later
21	ASSY CHANNEL GLASS RR DOOR RH	Unrestricted	ASSEMBLY CHANNEL GLASS REAR DOOR RIGHT	1051821-99-A	1	For cars before 5/11/17 will fit with bright molding 1039308-00-A or earlier. OK to use 6006383-00-I or newer and 1047192-00-A/B if 1051821-99-A is not available. For 6006383-00-I/J, remove the bottom piece of 3M tape cleanly and use urethane to bond the upper bright to it.
21	ASSY CHANNEL GLASS RR DOOR RH	Unrestricted	ASSEMBLY CHANNEL GLASS REAR DOOR RIGHT	1051821-80-D	1	For cars on or after 5/11/17,will fit with the newer bright molding 1079448-00-C or later
22	BLT HF M6x1.00x18 [8.8]-D-ZnAl-W	Unrestricted	BOLT M6x1.00x18 ZINC ALUMINUM	1006529-00-A	4	use to install item #10
*	Dow BetaSeal Express - 310ML CARTRIDGE	Unrestricted	DOW BETASEAL EXPRESS - 310ML	1048645-00-A	**	use 288 ml to install item #10
*	5504G primer - 10ML BOTTLE	Unrestricted	5504G PRIMER - 10ML	1059658-00-A	**	one-time use container. use with 1048645-00-A.

Windshield and Liftgate Glass

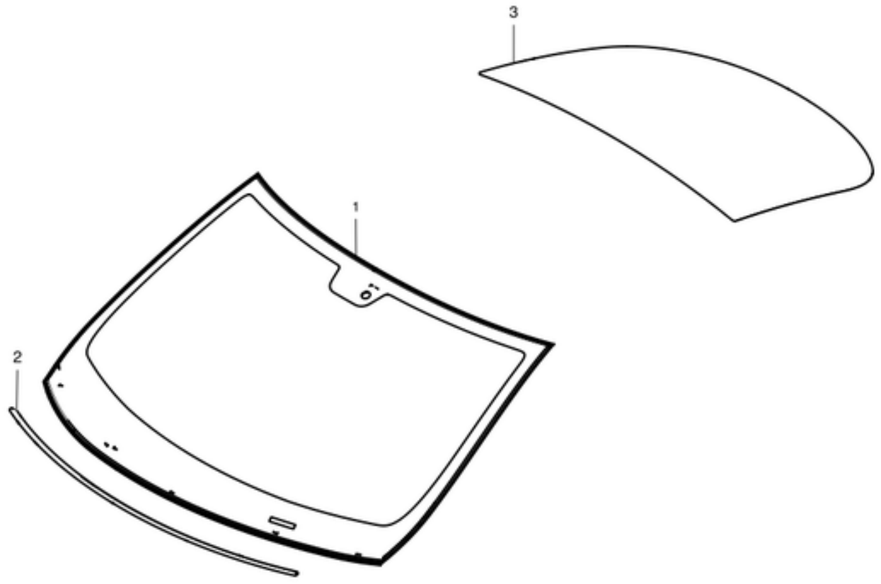

No	Part Name	Category	Part Description	Part Number	Qty	Comments
1	WSHLD ASSY MONO-CAM HWA LHD	Unrestricted	WINDSHIELD - MONOCAMERA AND HEATED WIPER AREA - IR COATING CUT-OUT FOR RFID DEVICES - LEFT HAND DRIVE	1061565-01-C	1	Ok to use on vehicles with No Cold Weather Package. For vehicles with option codes: DRLH AND DA01, DRLH AND DA02 built before October 12th, 2016
1	MS WSHLD ASSY TRIPLE-CAM HWA LHD	Unrestricted	WINDSHIELD - TRIPLE CAM AND HEATED WIPER AREA - IR COATING CUT-OUT FOR RFID DEVICES - LEFT HAND DRIVE	1061987-97-F	1	Ok to use 1061987-98-G. For vehicles manufactured on or after October 12th, 2016: DRLH
*	WINDSHIELD GLASS PAD, FRONT	Unrestricted	WINDSHIELD GLASS PAD, 15 MM X 6 MM X 5 MM, 3 PER PACKAGE	1054797-00-A	3	
2	SEAL, WINDSHIELD EDGE	Unrestricted	WINDSHIELD EDGE SEAL	1004376-00-D	1	
3	BACKLITE	Unrestricted	LIFTGATE GLASS	6005898-00-F	1	
*	REAR GLASS, GLASS PAD	Unrestricted	LIFTGATE GLASS PAD, 15 MM X 5 MM X 10 MM	1054798-00-A	9	One piece per package
*	Dow BetaSeal Express - 310ML CARTRIDGE	Unrestricted	DOW BETASEAL EXPRESS - 310ML	1048645-00-A	**	use 258 ml
*	5504G primer - 10ML BOTTLE	Unrestricted	5504G PRIMER - 10ML	1059658-00-A	**	one-time use container. Use with 1048645-00-A.

ABS, TRACTION AND STABILITY CONTROL

ABS Module and ESC Sensor

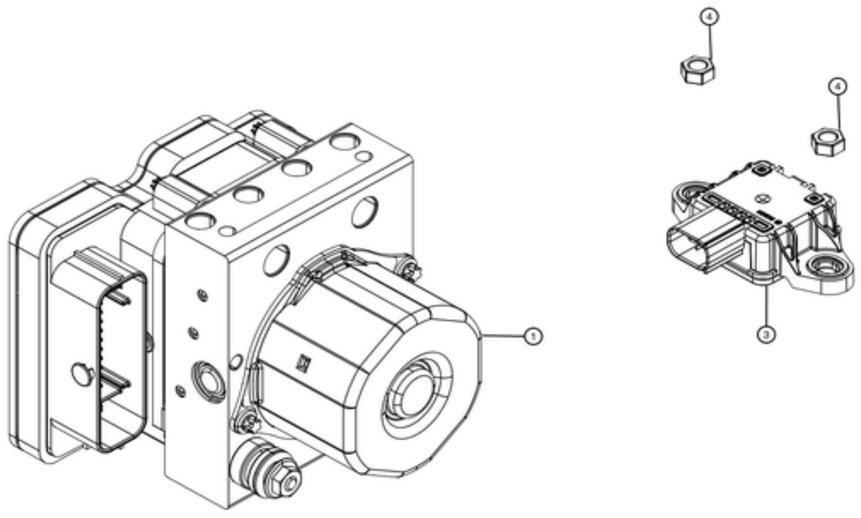

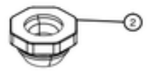

No	Part Name	Category	Part Description	Part Number	Qty	Comments
1	HCU HYDRAULIC CONTROL UNIT/PUMP	Unrestricted	HYDRAULIC CONTROL UNIT PUMP - DRIVER ASSISTANCE	1037797-00-D	1	Production part number; Service part number is 1038119-00-D. The service part is the same as the production part except that the pump is pre-filled with brake fluid.
1	SVC HYDRAULIC CONTROL UNIT FOR ESP 2.0	Unrestricted	HYDRAULIC CONTROL UNIT (ECU+PUMP) ESP 2.0 - DRIVERS ASSISTANCE - SERVICE ONLY	1038119-00-D	1	Use with vehicles that came with 1037797-00-D.
2	Isolator	Unrestricted	HYDRAULIC CONTROL UNIT ISOLATOR	6006364-00-A	2	
3	ESC SENSOR CLUSTER	Unrestricted	ELECTRONIC STABILITY CONTROL BRAKE SENSOR CLUSTER	6006369-00-A	1	
4	NUT,LCK,HEX,FLG,M6x1.00[8]-4	Unrestricted	NUT, LOCK, HEX, FLANGE, M6x1.00	1004378-00-B	2	Order in quantities of 50; minimum order: 50.
5	(ESP 2.0) HCU HYDRAULIC CONTROL UNIT ECU SERVICE KIT (ESP 2.0)	Unrestricted	HYDRAULIC CONTROL UNIT - ELECTRONIC CONTROL UNIT SERVICE KIT - ESP 2.0 - DRIVERS ASSISTANCE	1038121-00-D	1	HCU ECU only. For vehicles that came with the 1037797-00-D HCU.

Wheel Speed Sensors

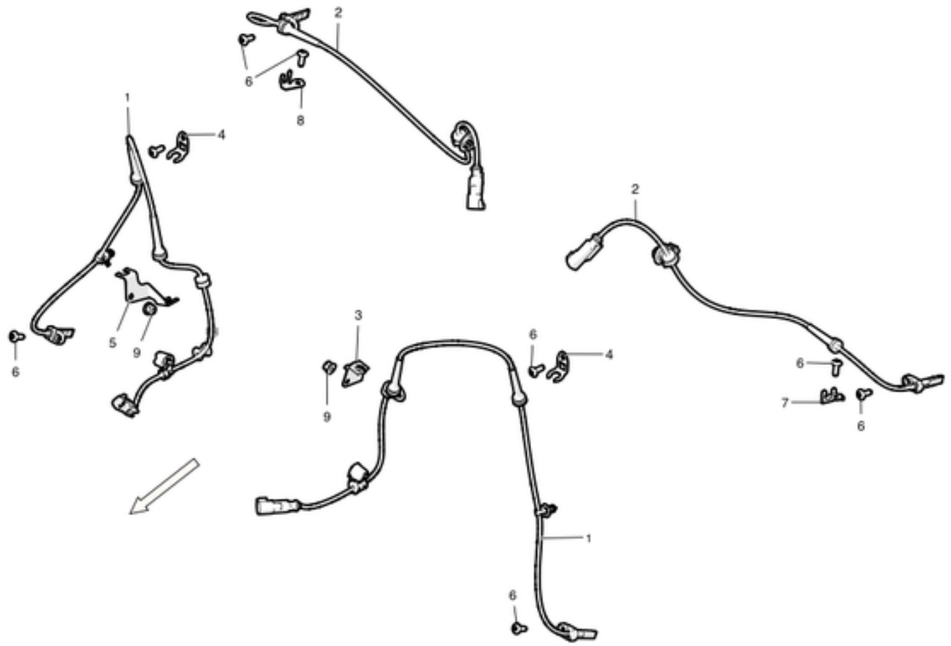

No	Part Name	Category	Part Description	Part Number	Qty	Comments
1	FRONT ANTI-LOCK BRAKE INTELLIGENT SYSTEM WHEEL SPEED SENSOR ASSEMBLY	Unrestricted	FRONT ANTI-LOCK BRAKE INTELLIGENT SYSTEM WHEEL SPEED SENSOR ASSEMBLY	1037794-00-B	2	
2	REAR ANTI-LOCK BRAKE INTELLIGENT SYSTEM WHEEL SPEED SENSOR ASSEMBLY	Unrestricted	REAR ANTI-LOCK BRAKE INTELLIGENT SYSTEM WHEEL SPEED SENSOR ASSEMBLY	1037796-00-C	2	
3	FR WHL SPD SNSR BODY BRKT LH	Unrestricted	FRONT WHEEL SPEED SENSOR BODY BRACKET - LEFT	1009604-00-B	1	
4	FR WHL SPD SNSR BRKT	Unrestricted	FRONT WHEEL SPEED SENSOR BODY BRACKET	1006366-00-A	2	
5	FR WHL SPD SNSR BODY BRKT RH	Unrestricted	FRONT WHEEL SPEED SENSOR BODY BRACKET - RIGHT	1009606-00-B	1	
6	BOLT TRX BTNHD M6x1.0x16[6.8]U-MP-ZnAlW	Unrestricted	BOLT, TORX, BUTTON HEAD, M6x1.0x16 ZINC ALUMINUM	2007067	6	
7	RR WHL SPD SNSR BRKT LH	Unrestricted	REAR WHEEL SPEED SENSOR BODY BRACKET - LEFT	1006364-00-A	1	
8	RR WHL SPD SNSR BRKT RH	Unrestricted	REAR WHEEL SPEED SENSOR BODY BRACKET - RIGHT	1006365-00-A	1	
9	NUT,LCK,HEX,FLG,M6x1.00[8]-4	Unrestricted	NUT, LOCK, HEX, FLANGE, M6x1.00	1004378-00-B	2	Order in quantities of 50; minimum order: 50.

BRAKE DISCS AND CALIPERS

Front Brake Rotors - Calipers and Pads

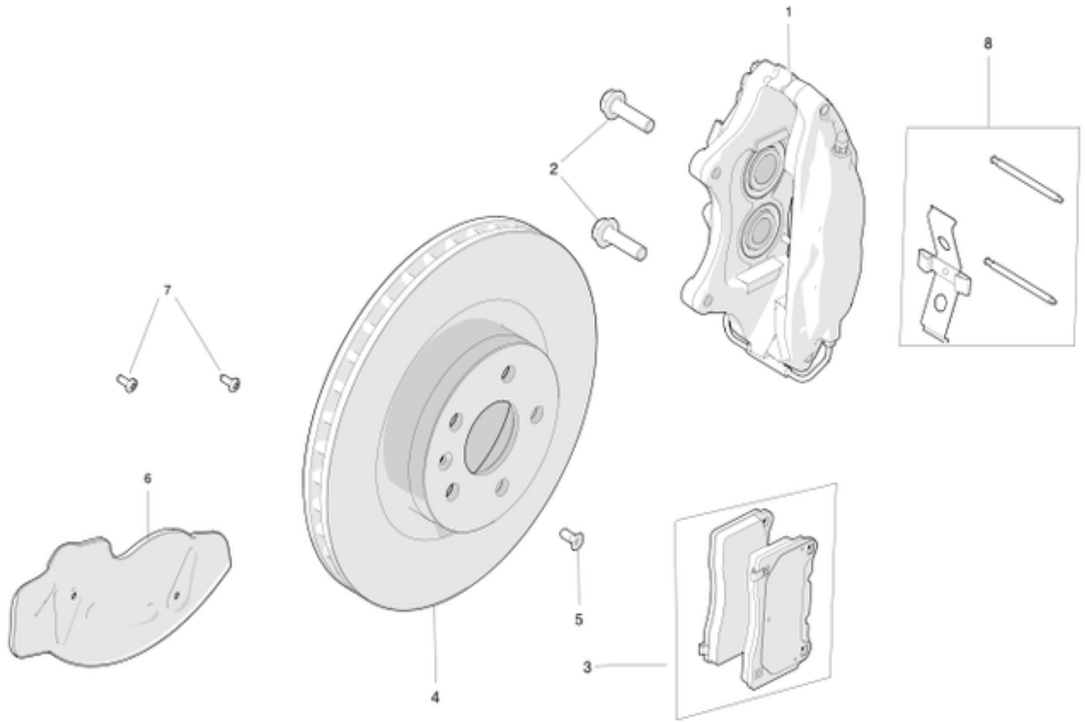

No	Part Name	Category	Part Description	Part Number	Qty	Comments
1	FR BRAKE CALIPER ASSY M12 LH (W/ pads)	Unrestricted	FRONT BRAKE CALIPER WITH PADS - LEFT	1003160-00-D	1	
1	FR BRAKE CALIPER ASSY M12 LH (W/ pads) - BLACK	Unrestricted	FRONT BRAKE CALIPER WITH PADS - LEFT- BLACK	1042639-00-D	1	
1	FR BRAKE CALIPER ASSY M12 LH (W/ pads) - RED	Unrestricted	FRONT BRAKE CALIPER WITH PADS - LEFT- RED	1042639-01-D	1	
1	FR BRAKE CALIPER ASSY M12 RH (W/ pads)	Unrestricted	FRONT BRAKE CALIPER WITH PADS - RIGHT	1003161-00-D	1	
1	FR BRAKE CALIPER ASSY M12 RH (w/ pads) - BLACK	Unrestricted	FRONT BRAKE CALIPER WITH PADS - RIGHT - BLACK	1042640-00-D	1	
1	FR BRAKE CALIPER ASSY M12 RH (w/ pads) - RED	Unrestricted	FRONT BRAKE CALIPER WITH PADS - RIGHT - RED	1042640-01-D	1	
1	FR BRAKE CALIPER ASSY M12 RH - RED PERFORMANCE OPTION (W/ pads)	Unrestricted	FRONT BRAKE CALIPER WITH PADS - RED PERFORMANCE - RIGHT	1003161-01-D	1	
2	BOLT HF M12x1.75x45 [10.9]-G720	Unrestricted	BOLT, M12x1.75x45MM	2007068-00-B	4	
3	FRONT BRAKE PAD SERVICE KIT HP1000-T. SERVICES FRONT AXLE (TWO CALIPERS)	Unrestricted	FRONT BRAKE PAD SERVICE KIT HP1000-T. SERVICES FRONT AXLE (TWO CALIPERS)	1055066-00-B	1	
4	FR BRAKE ROTOR W/ AS-CAST OUTER HAT	Unrestricted	FRONT BRAKE ROTOR WITH AS-CAST OUTER HAT	1025099-00-B	2	Use with 19 inch or 21 inch wheels.
5	BLT CSK TRX M8x1.25x20 10.9-ZnAl-W	Unrestricted	BOLT, TORX, M8x1.25x20MM ZINC ALUMINUM	1004377-00-B	2	Order in quantities of 50; minimum order: 50.
6	FR BRAKE DISC DUST SHIELD LH	Unrestricted	FRONT BRAKE ROTOR DUST SHIELD LEFT	1045945-00-B	1	For without Cold Weather package.
6	FR BRAKE DISC DUST SHIELD LH	Unrestricted	FRONT COLD WEATHER BRAKE ROTOR DUST SHIELD LEFT	1045945-01-B	1	For vehicles with Cold Weather package.

6	FR BRAKE DISC DUST SHIELD RH	Unrestricted	FRONT BRAKE DISC DUST SHIELD RIGHT	1045951-00-B	1	For vehicles without Cold Weather package.
6	FR BRAKE DISC DUST SHIELD RH	Unrestricted	FRONT COLD WEATHER BRAKE ROTOR DUST SHIELD RIGHT	1045951-01-B	1	For vehicles with Cold Weather package.
7	BOLT TRX BTNHD M6x1.0x16[6.8]U-MP-ZnAlW	Unrestricted	BOLT, TORX, BUTTON HEAD, M6x1.0x16 ZINC ALUMINUM	2007067	4	Use to install item #6.
8	FR CALIPER SPRING AND PIN KIT	Unrestricted	FRONT CALIPER SPRING AND PIN KIT	6008115-00-A	2	
9	FR CALIPER DUST BOOT KIT	Unrestricted	FRONT CALIPER DUST BOOT KIT	1013027-00-A	2	
10	CALIPER BLEED SCREW KIT	Unrestricted	CALIPER BLEED SCREW KIT	1013049-00-A	2	
*	BRAKE CALIPER CERAMIC GREASE - 10OZ	Unrestricted	BRAKE CALIPER CERAMIC GREASE - 10OZ	1063021-00-A	1	

Rear Brake Rotors - Calipers and Pads - Brembo

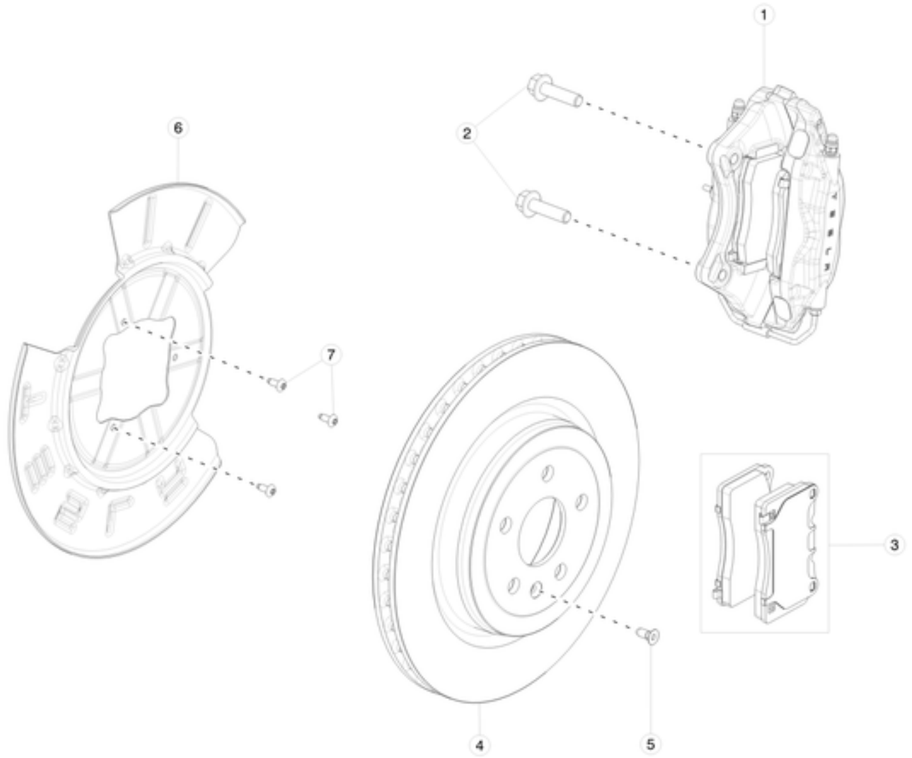

No	Part Name	Category	Part Description	Part Number	Qty	Comments
1	RR BRAKE CALIPER ASSY LH (W/ pads) - BLACK	Unrestricted	REAR BRAKE CALIPER WITH PADS - LEFT - BLACK	1042641-00-C	1	For vehicles built before November 23, 2016. Not interchangeable with Mando calipers.
1	RR BRAKE CALIPER ASSY LH (W/ pads) - RED	Unrestricted	REAR BRAKE CALIPER WITH PADS - LEFT - RED	1042641-01-C	1	Option code: X024
1	RR BRAKE CALIPER ASSY RH (W/ pads) - BLACK	Unrestricted	REAR BRAKE CALIPER WITH PADS - RIGHT - BLACK	1042642-00-C	1	For vehicles built before November 23, 2016. Not interchangeable with Mando calipers.
1	RR BRAKE CALIPER ASSY RH (W/ pads) - RED	Unrestricted	REAR BRAKE CALIPER WITH PADS - RIGHT - RED	1042642-01-C	1	Option code: X024
2	BOLT HF M12x1.75x45 [10.9]-G720	Unrestricted	BOLT, M12x1.75x45MM	2007068-00-B	4	
*	RR CALIPER SPRING and PIN KIT	Unrestricted	REAR CALIPER SPRING AND PIN KIT	6008142-00-A	2	
3	REAR BRAKE PAD SERVICE KIT HP1000-T. SERVICES REAR AXLE (TWO CALIPERS)	Unrestricted	REAR BRAKE PAD SERVICE KIT HP1000-T. SERVICES REAR AXLE (TWO CALIPERS)	1055068-00-B	1	
*	RR BRAKE PAD NOISE SHIM KIT	Unrestricted	REAR BRAKE PAD NOISE SHIM KIT	1059198-00-A	1	
4	REAR BRAKE ROTOR - OUTER HAT AS CAST	Unrestricted	REAR BRAKE ROTOR - OUTER HAT AS CAST	6006431-00-D	2	For vehicles built before June 16, 2017
4	REAR BRAKE ROTOR - RASSINI	Unrestricted	REAR BRAKE ROTOR - RASSINI	1027632-00-B	2	For vehicles built on or after June 16, 2017
5	BLT CSK TRX M8x1.25x20 10.9-ZnAl-W	Unrestricted	BOLT, TORX, M8x1.25x20MM ZINC ALUMINUM	1004377-00-B	2	Order in quantities of 50; minimum order: 50.
6	RR BRAKE DISC ROTOR DUST SHIELD LH	Unrestricted	REAR BRAKE ROTOR DUST SHIELD - LEFT	6006432-00-A	1	Use on all vehicles - Install if not present.
6	RR BRAKE DISC ROTOR DUST SHIELD RH	Unrestricted	REAR BRAKE ROTOR DUST SHIELD - RIGHT	6006433-00-A	1	Use on all vehicles - Install if not present.
7	BOLT TRX BTNHD M6x1.0x16[6.8]U-MP-ZnAlW	Unrestricted	BOLT, TORX, BUTTON HEAD, M6x1.0x16 ZINC ALUMINUM	2007067	6	use to install item #6
*	RR CALIPER DUST BOOT KIT	Unrestricted	REAR CALIPER DUST BOOT KIT	1013026-00-A	2	

*	CALIPER BLEED SCREW KIT	Unrestricted	CALIPER BLEED SCREW KIT	1013049-00-A	2	
*	BRAKE CALIPER CERAMIC GREASE - 10OZ	Unrestricted	BRAKE CALIPER CERAMIC GREASE - 10OZ	1063021-00-A	1	

Rear Brake Rotors - Calipers and Pads- Mando

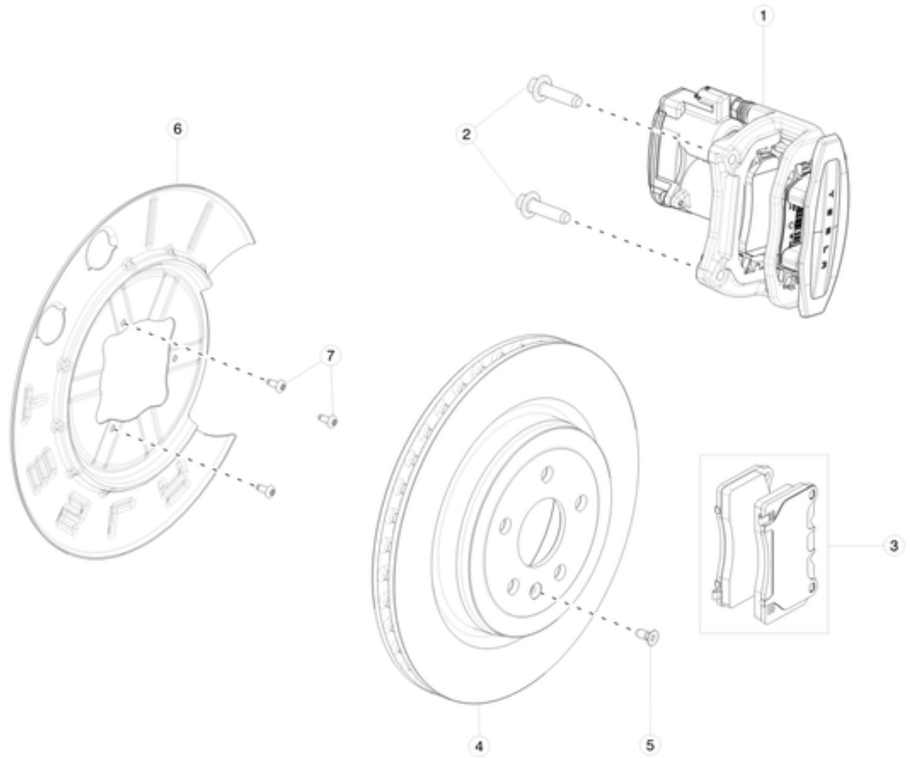

No	Part Name	Category	Part Description	Part Number	Qty	Comments
1	RR BRAKE CALIPER ASSY LH (W/ pads) - BLACK - MANDO	Unrestricted	REAR BRAKE CALIPER WITH PADS - LEFT - BLACK - MANDO	1078541-00-A	1	For vehicles with option code X025, built on or after November 23, 2016.
1	RR BRAKE CALIPER ASSY RH (W/ pads) - BLACK - MANDO	Unrestricted	REAR BRAKE CALIPER WITH PADS - RIGHT - MANDO	1078542-00-A	1	For vehicles with option code X025, built on or after November 23, 2016.
2	BOLT,TE,M12x45,STL[109],ZNFL [BLCK]	Unrestricted	BOLT,TE,M12x45,STL[109],ZNFL[BLCK]	1088968-00-B	4	
3	REAR BRAKE PAD REPLACEMENT KIT - MANDO	Unrestricted	REAR BRAKE PAD REPLACEMENT KIT - MANDO. SERVICES REAR AXLE (TWO CALIPERS)	1097416-00-A	1	
*	CALIPER BLEED SCREW AND CAP KIT	Unrestricted	CALIPER BLEED SCREW AND CAP KIT	1097422-00-A	2	
4	REAR BRAKE ROTOR - OUTER HAT AS CAST	Unrestricted	REAR BRAKE ROTOR - OUTER HAT AS CAST	6006431-00-D	2	
5	BLT CSK TRX M8x1.25x20 10.9-ZnAl-W	Unrestricted	BOLT, TORX, M8x1.25x20MM ZINC ALUMINUM	1004377-00-B	2	Order in quantities of 50; minimum order: 50.
6	RR BRAKE DISC ROTOR DUST SHIELD LH	Unrestricted	REAR BRAKE ROTOR DUST SHIELD - LEFT	1072160-00-A	1	For vehicles with option code X025, built on or after November 23, 2016.
6	RR BRAKE DISC ROTOR DUST SHIELD RH	Unrestricted	REAR BRAKE ROTOR DUST SHIELD - RIGHT	1072161-00-A	1	For vehicles with option code X025, built on or after November 23, 2016.
7	BOLT TRX BTNHD M6x1.0x16[6.8]U-MP-ZnAlW	Unrestricted	BOLT, TORX, BUTTON HEAD, M6x1.0x16 ZINC ALUMINUM	2007067	6	Use to install item #6.

BRAKE PEDAL

Brake Pedal

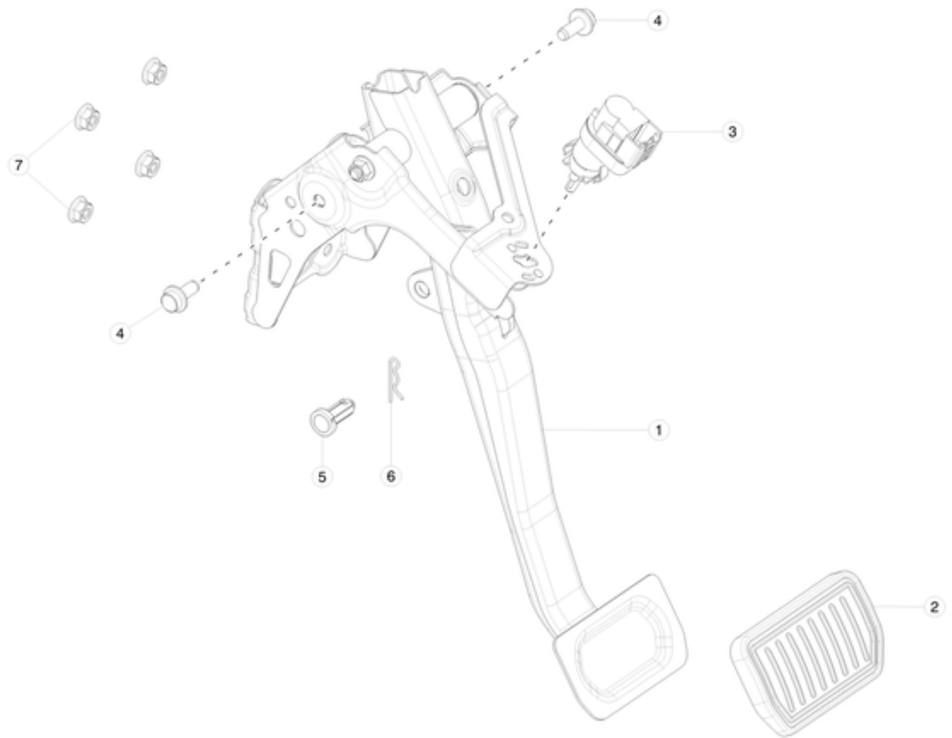

No	Part Name	Category	Part Description	Part Number	Qty	Comments
1	PEDAL ASSY - BRAKE - LHD	Unrestricted	BRAKE PEDAL ASSEMBLY - LEFT HAND DRIVE	1050657-00-A	1	
1	PEDAL ASY BRAKE PERFORMANCE - LHD	Unrestricted	BRAKE PEDAL ASSEMBLY - PERFORMANCE - LEFT HAND DRIVE	1050657-01-A	1	
2	BRAKE PEDAL PAD - BASE	Unrestricted	BRAKE PEDAL PAD - BASE	1050662-00-A	1	
2	BRAKE PEDAL PAD - PERFORMANCE	Unrestricted	BRAKE PEDAL PAD - PERFORMANCE	1050662-01-A	1	
3	SWITCH - BRAKE ON/OFF	Unrestricted	BRAKE SWITCH, ON/OFF	1005124-00-A	1	
4	BLT WSHR FLAT M8-1.25X20	Unrestricted	BLT WSHR FLAT M8-1.25X20	1006809-00-A	2	
5	PIN, BOOSTER TO PEDAL	Unrestricted	BOOSTER TO PEDAL PIN	1051030-00-A	1	
6	CLIP BOOSTER TO PEDAL	Unrestricted	BOOSTER TO PEDAL CLIP	1055857-00-A	1	
7	NUT HFPT M8x1.25 [10]-G720	Unrestricted	NUT, M8x1.25MM	2007104-00-B	4	

BRAKE PIPES AND HOSES

Brake Lines



No	Part Name	Category	Part Description	Part Number	Qty	Comments
1	DM BRAKE LINE BUNDLE, ABS TO WHEELS	Unrestricted	ANTI-LOCK BRAKE SYSTEM TO WHEELS BRAKE LINE BUNDLE	1030621-00-G	1	
2	BRAKE LINE, PRIMARY 2-TUBE BUNDLE, HPDM	Unrestricted	PRIMARY BRAKE LINE - 2 -TUBE BUNDLE	1030619-00-B	1	
3	2 TUBE BUNDLE - JBLOCK TO REAR WHEELS	Unrestricted	JUNCTION BLOCK TO REAR WHEELS - 2 TUBE BUNDLE	6008136-00-G	1	
4	BLT TRX BTNHD M6x1.00x30 [4.8] ZnAl-W	Unrestricted	BOLT, TORX BUTTON HEAD, M6x1.00x30MM ZINC ALUMINUM	1004353-00-A	1	

Jounce Hoses

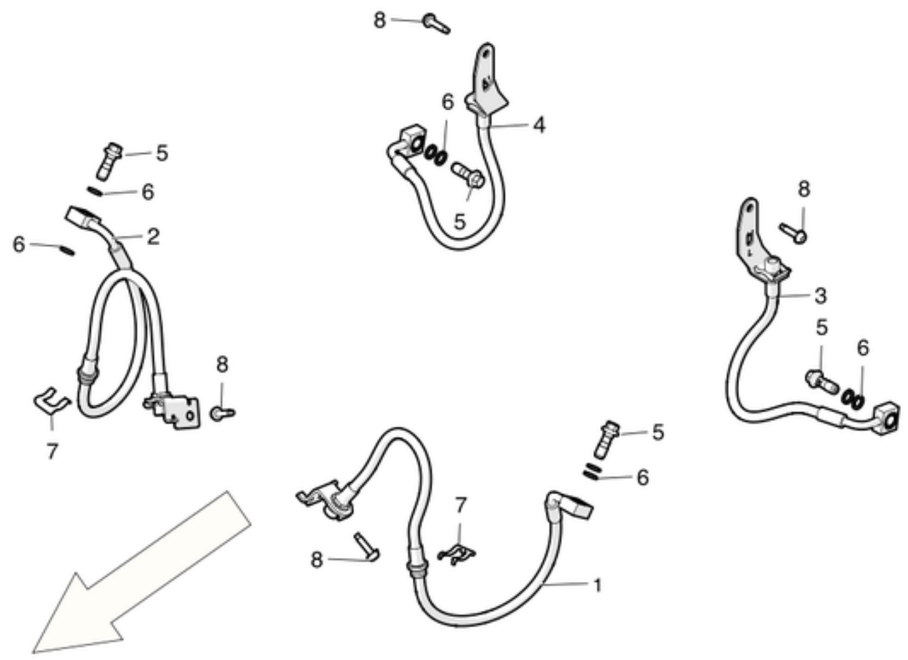

No	Part Name	Category	Part Description	Part Number	Qty	Comments
1	BRAKE JOUNCE HOSE FR LH	Unrestricted	BRAKE JOUNCE HOSE - FRONT LEFT - SINGLE MOTOR	6006354-99-C	1	OK to replace previous revs.
1	LF DM BRAKE JOUNCE HOSE	Unrestricted	BRAKE JOUNCE HOSE - FRONT LEFT - DUAL MOTOR	1034210-00-G	1	
*	LH DM JOUNCE HOSE BRACKET	Unrestricted	JOUNCE HOSE BRACKET - FRONT LEFT - DUAL MOTOR	1038627-00-A	1	
2	BRAKE JOUNCE HOSE FR RH	Unrestricted	BRAKE JOUNCE HOSE - FRONT RIGHT - SINGLE MOTOR	6006355-99-C	1	OK to replace previous revs.
2	RF BRAKE JOUNCE HOSE - DM	Unrestricted	BRAKE JOUNCE HOSE - FRONT RIGHT - DUAL MOTOR	1034211-00-G	1	
*	RH DM JOUNCE HOSE BRACKET	Unrestricted	JOUNCE HOSE BRACKET - FRONT RIGHT - DUAL MOTOR	1038628-00-A	1	
3	BRAKE JOUNCE HOSE RR LH	Unrestricted	BRAKE JOUNCE HOSE - REAR LEFT	6006356-00-B	1	For all vehicles with option code X024; and vehicles with option code X025 built before November 23, 2016.
*	MANDO BRAKE HOSE - REAR - LEFT	Unrestricted	MANDO BRAKE HOSE - REAR - LEFT	1088732-00-A	1	For vehicles with option code X025 built on or after November 23, 2016.
4	BRAKE JOUNCE HOSE RR RH	Unrestricted	BRAKE JOUNCE HOSE - REAR RIGHT	6006357-00-B	1	For all vehicles with option code X024; and vehicles with option code X025 built before November 23, 2016.
*	MANDO BRAKE HOSE - REAR - RIGHT	Unrestricted	MANDO BRAKE HOSE - REAR - RIGHT	1088733-00-A	1	For vehicles with option code X025 built on or after November 23, 2016.
5	Banjo Bolt (Flexible Hose to Caliper)	Unrestricted	BOLT, FLOW, M10-1.00-27.5MM ZINC NICKEL	1006388-00-A	4	
6	Sealing Washer (Flexible hose to caliper)	Unrestricted	WASHER, FLAT M10x14.5x1.6MM COPPER	1006309-00-A	8	
7	CLIP - JOUNCE HOSE	Unrestricted	JOUNCE HOSE CLIP	1007786-00-A	4	
8	BLT TRX MP M6-1.00x20 D12 [8.8] ZnAL	Unrestricted	BOLT, TORX, M6-1.00x20MM, 12MM DIAMETER - ZINC ALUMINUM	1005814-00-A	4	
8	NUT,FLANGE,HEX,M6x1.00[cl 8]-14 850 hrs ZnNi	Unrestricted	NUT, LOCK, HEX, FLANGE, M6x1.00	1004378-00-B	4	Order in quantities of 50; minimum order: 50.

ELECTROMECHANICAL BRAKE BOOSTER

Electromechanical Brake Booster

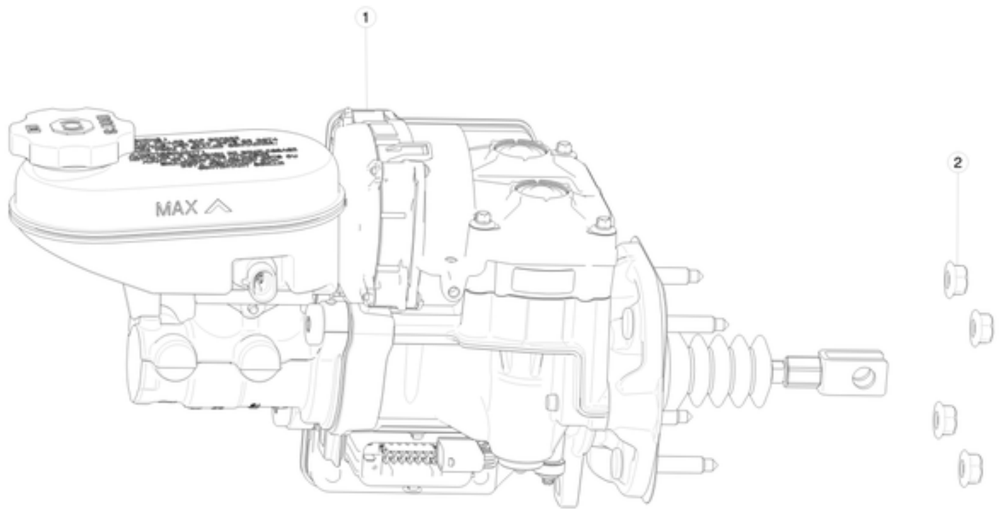

No	Part Name	Category	Part Description	Part Number	Qty	Comments
1	IBOOSTER - LEFT HAND DRIVE	Unrestricted	ELECTROMECHANICAL BRAKE BOOSTER - LEFT HAND DRIVE	1037123-00-B	1	
2	NUT HFPT M8x1.25 [10]-G720	Unrestricted	NUT HFPT M8x1.25 [10]-ZnNi	200710400B	4	

PARKING BRAKE

Park Brake Calipers and Pads

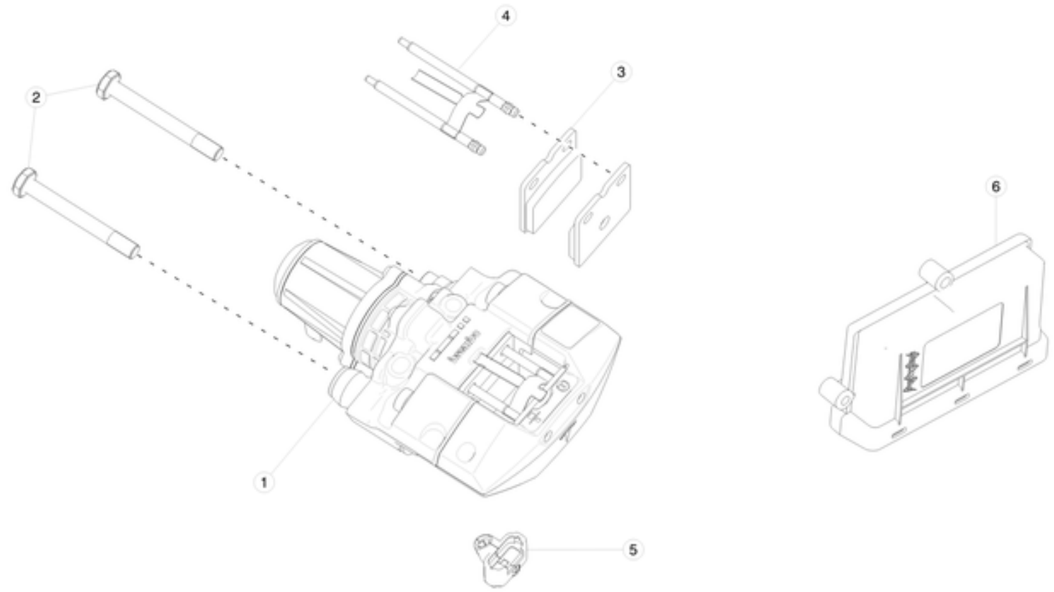

No	Part Name	Category	Part Description	Part Number	Qty	Comments
1	PARKING BRAKE CALIPER BODY LH (WITH PADS)	Unrestricted	PARKING BRAKE CALIPER WITH PADS - LEFT	1021252-00-E	1	
1	PARKING BRAKE CALIPER BODY LH (WITHOUT PADS)	Unrestricted	PARKING BRAKE CALIPER WITHOUT PADS - LEFT	1021333-00-C	1	
1	PARKING BRAKE CALIPER BODY RH (WITH PADS)	Unrestricted	PARKING BRAKE CALIPER WITH PADS - RIGHT	1021250-00-E	1	
1	PARKING BRAKE CALIPER BODY RH (WITHOUT PADS)	Unrestricted	PARKING BRAKE CALIPER WITHOUT PADS - RIGHT	1021334-00-C	1	
2	BLT H M10x1.50x86 [8.8] ZnAl-W	Unrestricted	BOLT, M10x1.50x86MM ZINC ALUMINUM	1004355-00-B	4	Order in quantities of 100; minimum order: 100.
3	PARKING BRAKE CALIPER BRAKE PAD KIT	Unrestricted	PARKING BRAKE CALIPER BRAKE PAD KIT	1003460-00-B	1	Services 2 calipers.
4	PARKING BRAKE CALIPER SPRING AND PIN KIT	Unrestricted	PARKING BRAKE CALIPER SPRING AND PIN KIT	1013298-00-A	2	1 kit per caliper.
5	ASY,HARN,EPB CONNECTOR COVER	Unrestricted	ELECTRONIC PARKING BRAKE HARNESS CONNECTOR COVER	1030201-00-A	2	
6	ASY, ELECTRONIC PARK BRAKE CONTROLLER	Unrestricted	ASY, ELECTRONIC PARK BRAKE CONTROLLER	1007618-00-E	1	For vehicles produced until August 21st, 2017.
6	ASY, ELECTRONIC PARK BRAKE CONTROLLER	Unrestricted	ASY, ELECTRONIC PARK BRAKE CONTROLLER	1007618-00-J	1	For vehicles on and after August 21st, 2017.
*	PARK BRAKE CHASSIS HARNESS BRACKET - LH	Unrestricted	PARK BRAKE CHASSIS HARNESS BRACKET - LH	1101850-00-B	1	For vehicles with option code X025 built on or after November 23, 2016.
*	PARK BRAKE CHASSIS HARNESS BRACKET - RH	Unrestricted	PARK BRAKE CHASSIS HARNESS BRACKET - RH	1101851-00-B	1	For vehicles with option code X025 built on or after November 23, 2016.

*	BOLT,HF,M10x22,STL[109]ZNFL,SMAT	Unrestricted	BOLT,HF,M10x22,STL[109]ZNFL,SMAT	1109182-00-B	1	For vehicles with option code X025 built on or after November 23, 2016.

CHASSIS AND SUBFRAMES

Front Subframe

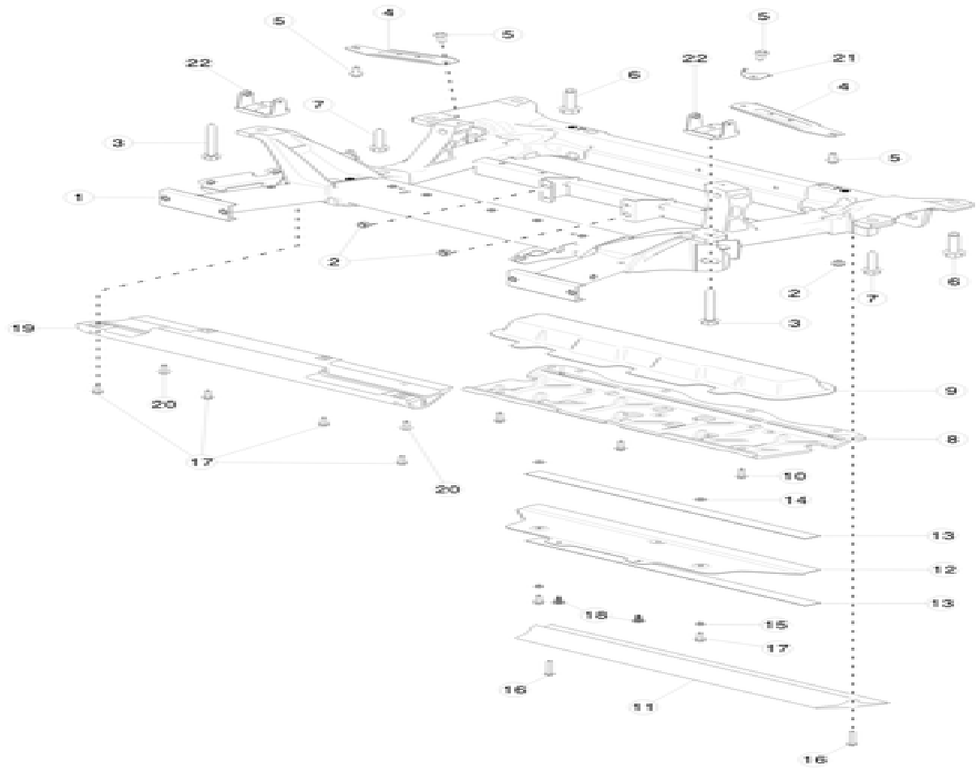

No	Part Name	Category	Part Description	Part Number	Qty	Comments
1	FR SUBFRAME ASSY	Unrestricted	FRONT SUBFRAME ASSEMBLY - LEFT HAND DRIVE	1056277-00-G	1	
3	BOLT,HF,M12x150,ZNFL,NOTCH,MAT	Unrestricted	BOLT,HF,M12x150,ZNFL,NOTCH,MAT	1058584-00-A	2	
6	BOLT HF M14x2.00x50 DP [10.9] ZnAl-W	Unrestricted	BOLT, M14x2.00x50MM ZINC ALUMINUM	1009169-00-A	2	
7	BOLT HF M12x1.75x35 [10.9]-G720	Unrestricted	BOLT, M12x1.75x35MM	2007111	2	
8	SKIDPLATE -FRONTSUBFRAME	Unrestricted	FRONT SUBFRAME SKID PLATE - SINGLE MOTOR	1014946-00-B	1	
8	SKIDPLATE -FRONTSUBFRAME	Unrestricted	FRONT SUBFRAME SKID PLATE - DUAL MOTOR	1045973-00-C	1	
9	ABSORBER SHIELD TOP	Unrestricted	SHIELD ABSORBER - TOP	1050486-00-B	1	
10	BLT HF M6-1.00x20[8.8]ZnAlW	Unrestricted	BOLT M6-1.00x20 ZINC ALUMINUM	1009420-00-A	2	Use to install Front Skid plate
11	FR BASH PLATE LWR EXTRUSION	Unrestricted	FRONT BASH PLATE LOWER EXTRUSION	1037112-00-A	1	
12	ASY - FR BASH PLATE LWR STAMPING	Unrestricted	FRONT BASH PLATE LOWER STAMPING ASSEMBLY	1038640-00-D	1	Contains 1038621-00-B and 1058772-00-A
13	ISOLATOR PATCH, TITANIUM STAMPING	Unrestricted	TITANIUM ISOLATOR PATCH	1038621-00-B	2	Use on items #11 and 12.
14	WASHER 8.4x16x1.6 PLA ADH	Unrestricted	WASHER 8.4x16x1.6MM ADHESIVE	1038837-00-A	2	Use on items #11 and 12.
15	SPACER SHLDR M6x12x3+8 PLA ADH	Unrestricted	SPACER SHOULDER, M6x12x3MM ADHESIVE	1038838-00-A	2	Use on items #11 and 12.
16	BOLT PF M6x40 PC109 ECOFIX	Unrestricted	BOLT, M6x40MM	1037743-00-A	2	Use on items #11 and 12. Order in quantities of 40; minimum order: 40.
17	BLT HF M6-1.00x18[8.8]ZnAl	Unrestricted	BOLT M6-1.00x18 ZINC ALUMINUM	2007206	6	Use on items #11, 12, and 19. Order in quantities of 50; minimum order: 50.

18	RVT PUSH-PULL 8X18X20.0	Unrestricted	RIVET PUSH-PULL 8X18X20.0	1006521-00-A	2	Use on items #11 and 12. Order in quantities of 50; minimum order: 50.
19	DM FRONT SUBFRAME SKID BAR	Unrestricted	FRONT SUBFRAME SKID BAR - DUAL MOTOR	1045973-00-C	1	
20	BLT HF M6x1.00x18 [8.8]-D-ZnAl-W	Unrestricted	BOLT M6x1.00x18 ZINC ALUMINUM	1006529-00-A	2	
22	ASSY, NUT PLATE, FR SUB-FRAME	Unrestricted	FRONT SUB-FRAME NUT PLATE ASSEMBLY	1039603-00-D	2	

Rear Subframe

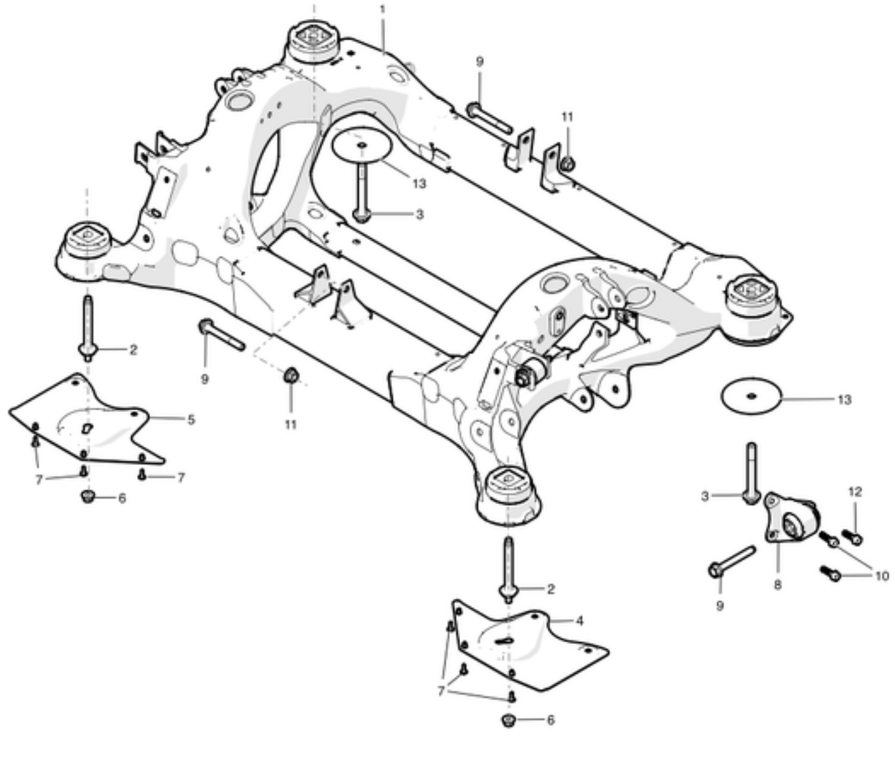

No	Part Name	Category	Part Description	Part Number	Qty	Comments
1	REAR SUB-FRAME ASSY	Unrestricted	REAR SUB-FRAME ASSEMBLY	6007012-00-K	1	
2	BOLT HF STUD M14-M10x100 [10.9]-G720	Unrestricted	BOLT, STUD, M14-M10x100MM	6009264	2	
3	BOLT HF M14x2.00x120 [10.9]-U-G720	Unrestricted	BOLT, M14x2.00x120MM	2007060	2	
4	SHEAR PLATE - RR SUBFRAME LH	Unrestricted	REAR SUBFRAME SHEAR PLATE - LEFT	1055766-00-B	1	
5	SHEAR PLATE - RR SUBFRAME RH	Unrestricted	REAR SUBFRAME SHEAR PLATE - RIGHT	1055866-00-B	1	
6	NUT	Unrestricted	NUT, M10x1.50mm	2007059-00-B	2	Order in quantities of 25; minimum order: 25.
7	BOLT,M5X15MM LG, BUTTONHEAD,TORX	Unrestricted	BOLT, M5X15MM LONG, BUTTONHEAD,TORX	1003397-00-A	6	
8	ASY - SIDE MOTOR MOUNT	Unrestricted	SIDE MOTOR MOUNT ASSEMBLY	1028034-00-B	1	
9	BOLT HF M12x1.75x90 [10.9]-U-G720	Unrestricted	BOLT, M12x1.75x90MM	2007064	3	
10	BOLT - M8-1.25x50 - DIN6921 - G10.9 - MTPT - ZF720	Unrestricted	BOLT, M8-1.25x50MM, MATPOINT	1008724-00-B	2	
11	NUT HF M12x1.75 [10]-G720	Unrestricted	NUT, M12x1.75MM	2007076	2	
12	BOLT - M8-1.25x30 - DIN6921 - G10.9 - MTPT - ZF720	Unrestricted	BOLT, M8-1.25x30MM, MATPOINT	1008722-00-A	1	Order in quantities of 25; minimum order: 25.
13	WSHR, BTM, RR BUSH, RR SUBF, MS/MSDM	Unrestricted	REAR SUBFRAME WASHER	1027565-01-A	2	
*	Rear Skid Bar	Unrestricted	REAR SKID BAR	1018859-00-A	1	

*	BLT HEX FL M8-1.25X25 8.8 -M-ZnAl	Unrestricted	BOLT HEX FLAT HEAD M8-1.25X25 ZINC ALUMINUM	1005805-00-A	2	Use to install Rear Skid Plate

CLOSURE ASSIST MECHANISM AND HINGES

Door Controllers and Sensors

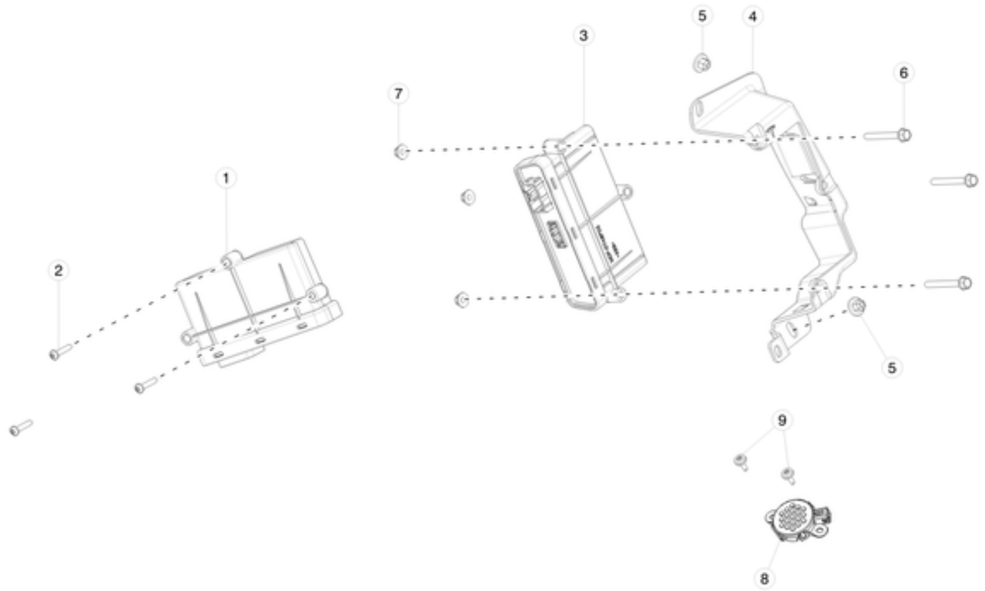

No	Part Name	Category	Part Description	Part Number	Qty	Comments
1	DOOR CONTROLLER MODEL S	Unrestricted	DOOR CONTROLLER MODULE	1003101-00-E	2	
2	BOLT,TPG,TORXPLUS,5-PTx30-07	Unrestricted	BOLT,TPG,TORXPLUS,5-PTx30-07	1003557-00-B	6	Screws for door controller. Order in quantities of 25; minimum order: 25.
3	POWER LIFT GATE CONTROL MODULE	Unrestricted	POWER LIFTGATE CONTROLLER MODULE	1007511-00-A	1	
4	BRACKET - ECU - PARK BRAKE AND PWR LIFTGATE	Unrestricted	ELECTRONIC PARKING BRAKE MODULE AND POWER LIFTGATE ELECTRONIC CONTROL UNIT BRACKET	1051906-00-A	1	
5	NUT,t5,HF,PLASTIC,THREADED	Unrestricted	NUT, PLASTIC,THREADED	1013805-00-A	4	use to install 1008903-00-B
6	BOLT - M6-1.0x50 - DIN7500 - TYPE D - ZF720	Unrestricted	BOLT,M6-1.0X50MM, FLANGED HEAD CAP SCREW	1008177-00-A	3	Use when Power Liftgate Module is present
6	BLT HEX WSHR M6-1.00x25 ZINC ALUMINUM	Unrestricted	BOLT HEX WASHER M6-1.00x25 ZINC ALUMINUM	1006551-00-B	3	Use when Power Liftgate Module is not present
7	NUT HF M6-1.00[8]ZINC ALUMINUM	Unrestricted	NUT M6-1.00 ZINC ALUMINUM	2007207	2	For use with 12V Fusebox Bracket. Order in quantities of 25; minimum order: 25.
8	POWER LIFTGATE CHIME	Unrestricted	POWER LIFTGATE CHIME	1003550-00-A	1	
9	BLT,TPG,TRX,PFLG,M4.2x19x11.5[St]-01	Unrestricted	BLT,TPG,TRX,PFLG,M4.2x19x11.5[St]-01	1014049-00-B	2	

Front Door Hinges and Fittings

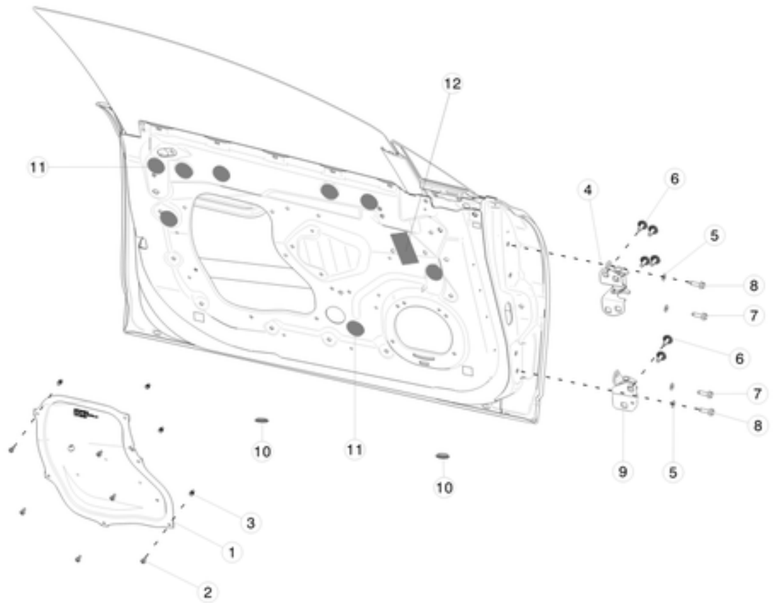

No	Part Name	Category	Part Description	Part Number	Qty	Comments
1	PLATE - FRONT DOOR LOWER, LEFT -PLASTIC	Unrestricted	PLATE - FRONT DOOR LOWER, LEFT - PLASTIC	1037847-00-C	1	1037847-00-C could replace 1037847-00-B
1	PLATE - FRONT DOOR LOWER, RIGHT - PLASTIC	Unrestricted	PLATE - FRONT DOOR LOWER, RIGHT - PLASTIC	1037846-00-C	1	1037846-00-C could replace 1037846-00-B
2	BLT,BTN,TRX,M5x16[10.9]-BK-X-SP-05	Unrestricted	BOLT, BUTTON HEAD, TORX, M5x16	1015888-00-C	12	
3	GROM, SCR, M5 SELF TAP, 0.8-2.5, 7MM SQ	Unrestricted	GROMMET, SCREW, M5 SELF-TAPPING	1003209-00-A	12	Order in quantities of 100; minimum order: 100.
4	ASY-HINGE UPR FR	Unrestricted	ASY-HINGE UPPER FRONT	6009549-00-E	2	
5	WSHR EPOXY M8x17x2.0	Unrestricted	WASHER EPOXY M8x17x2.0	1003133-00-A	4	
6	BLT HF MP D24 M8-1.25x21[9.8]ZnAl	Unrestricted	BOLT M8-1.25X25 MATPOINT SERRATED ZINC ALUMINUM BLACK	2007212-00-C	12	Order in quantities of 50; minimum order: 50.
7	BLT HF MP D17 M8-1.25x26[8.8]ZnAl	Unrestricted	BOLT MATPOINT M8-1.25x26 ZINC ALUMINUM	1008571-00-C	4	Order in quantities of 25; minimum order: 25.
8	BLT,HEX,FLG,M8x25[9.8]	Unrestricted	BOLT, HEX, FLANGE, M8x25 [9.8]	1028183-00-A	4	
9	ASY-HINGE LWR LH	Unrestricted	ASY-HINGE LOWER, FRONT, LEFT	6009552-00-E	1	
9	ASY-HINGE LWR RH	Unrestricted	ASY-HINGE LOWER, FRONT, RIGHT	6009569-00-E	1	
10	PLUG-DOOR ACCESS LWR	Unrestricted	PLUG-DOOR ACCESS LOWER	1005714-00-A	4	
11	TAPE, DOOR, D44	Unrestricted	DOOR TAPE - 44MM DIAMETER	1009583-00-A	18	Not Illustrated. Order in quantities of 10; minimum order: 10.
12	TAPE, DOOR, 45X85	Unrestricted	DOOR TAPE - 45MM X 85MM	1009585-00-A	2	Not Illustrated. Order in quantities of 9; minimum order: 9.

Hood Hinges and Fittings

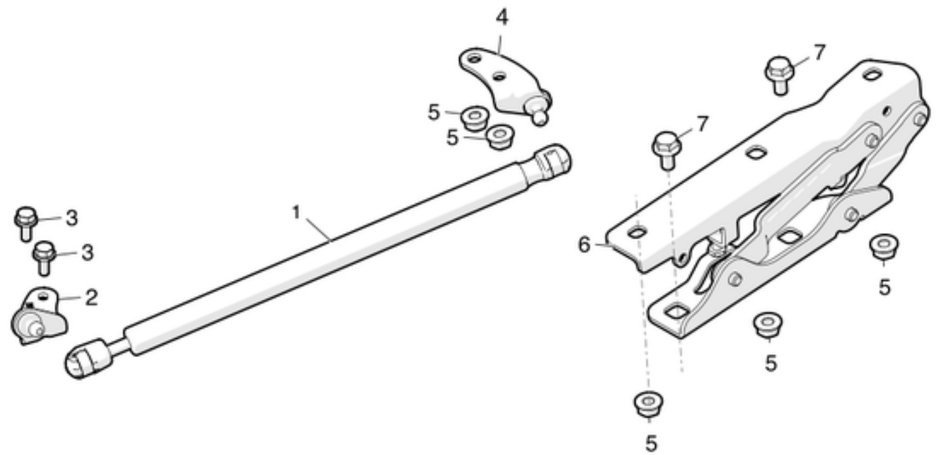

No	Part Name	Category	Part Description	Part Number	Qty	Comments
1	GAS STRUT - HOOD	Unrestricted	GAS STRUT - HOOD	6006603-00-C	2	
2	BRKT-GAS PROP LH BODY	Unrestricted	BRACKET, GAS STRUT, LEFT, BODY SIDE	1011642-00-B	1	
2	BRKT-GAS PROP RH BODY	Unrestricted	BRACKET, GAS STRUT, RIGHT, BODY SIDE	1011641-00-B	1	
3	BLT HF M6-1.00x15[9.8]ZnAl	Unrestricted	BOLT, HEX, FLANGE, M6-1.00x15	2007222-00-B	4	
4	BRKT-GAS PROP LH HOOD	Unrestricted	BRACKET, GAS STRUT, LEFT, HOOD SIDE	1008841-00-C	1	
4	BRKT-GAS PROP RH HOOD	Unrestricted	BRACKET, GAS STRUT, RIGHT, HOOD SIDE	1008840-00-C	1	
5	NUT,M8-1.25,HF,Steel[10],ZnAl,BLACK	Unrestricted	NUT,M8-1.25,STEEL,ZINC ALUMINUM,BLACK	1006628-01-A	10	Order in quantities of 50; minimum order: 50.
6	HOOD HINGE LH	Unrestricted	HOOD HINGE LEFT	6006738-00-E	1	
6	HOOD HINGE RH	Unrestricted	HOOD HINGE RIGHT	6006737-00-E	1	
7	BLT,HEX,FLG,M8-1.25x20x24	Unrestricted	BOLT,HEX,FLANGE,M8-1.25x20x24,ZINC ALUMINUM	1016260-00-A	4	

Liftgate Hinges and Fittings

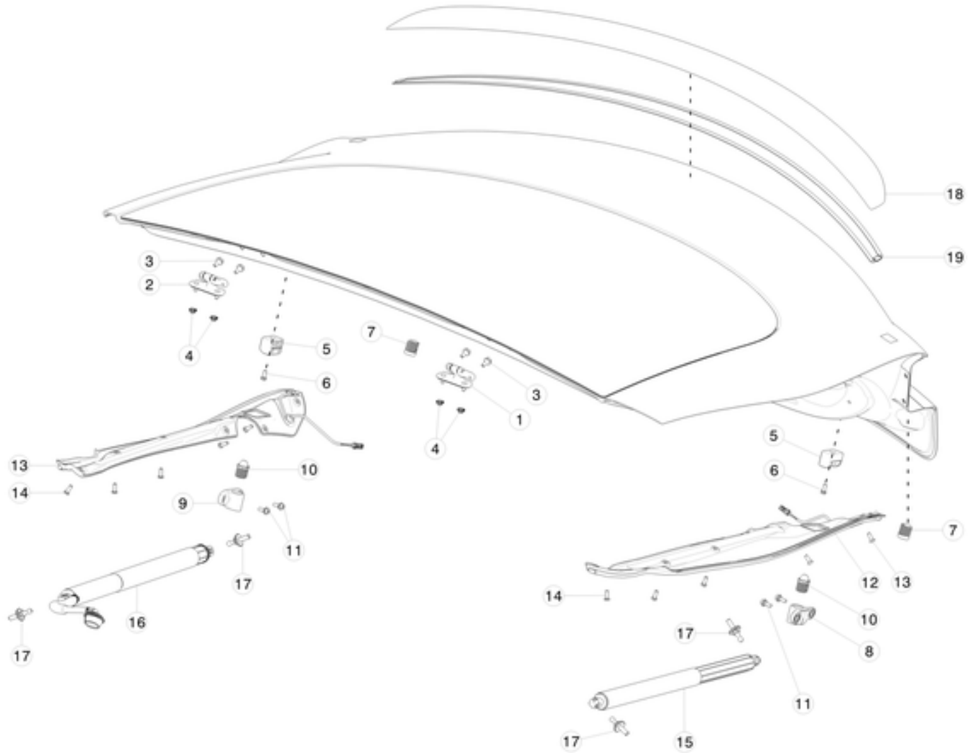

No	Part Name	Category	Part Description	Part Number	Qty	Comments
1	ASY HINGE LIFTGATE LH	Unrestricted	HINGE, LIFTGATE, LEFT	6006613-00-A	1	
2	ASY HINGE LIFTGATE RH	Unrestricted	HINGE, LIFTGATE, RIGHT	6006612-00-A	1	
*	CLEAR AUTO SEALER, 3M 08551, 5 OZ. TUBE	Unrestricted	Clear Auto Sealer, 3M 08551, 5 oz. Tube	1031090-00-A	1	use on item #1 and 2
3	BLT HF M6-1.00x15[9.8]ZnAl	Unrestricted	BOLT, HEX, FLANGE, M6-1.00x15	2007222-00-B	1	
4	NUT,HEX,FLG,M6-1.0x14[St]-P-04	Unrestricted	NUT, HEX, FLANGE,M6-1.0x14	1016227-00-A	2	Order in quantities of 50; minimum order: 50.
5	WEDGE BUMPER - LIFTGATE	Unrestricted	WEDGE DAMPER, LIFTGATE	1008866-00-B	2	wedge insert, 1004039-00-B, must be ordered separately
6	BLT PANFLG D10 M6-1.00x14[9.8]ZnAl	Unrestricted	BOLT PANHEAD FLANGE M6-1.00x14 ZINC ALUMINUM	1008867-00-A	2	Order in quantities of 50; minimum order: 50.
7	BUMPER-OVERSLAM AT LWR LIFTGATE	Unrestricted	BUMPER-OVERSLAM, AT LOWER LIFTGATE	6007220-00-B	2	
8	WEDGE BUMPER - BODY - LH	Unrestricted	WEDGE DAMPER, BODY, LEFT	1008863-00-C	1	
9	WEDGE BUMPER - BODY - RH	Unrestricted	WEDGE DAMPER, BODY, RIGHT	1008864-00-C	1	
10	INSERT WEDGE DAMPER, BODY	Unrestricted	INSERT, WEDGE DAMPER, BODY	1004038-00-B	1	
11	BLT PANFLG SHLDR M6-1.0x14 [9.8]ZnAl	Unrestricted	BOLT PANHEAD FLANGE SHOULDER M6-1.0x14 ZINC ALUMINUM	1008782-00-A	4	Order in quantities of 50; minimum order: 50.
12	ANTI PINCH SENSOR ASY LH	Unrestricted	PINCH SENSOR ASSEMBLY LEFT	6007576-00-B	1	Smaller connector. Must use with 1004417-00-M (LHD) or 1026641-00-C (RHD) or earlier.
12	ANTI PINCH SENSOR ASY LH	Unrestricted	PINCH SENSOR ASSEMBLY LEFT	6007576-00-C	1	Larger connector. Must use with 1004417-00-N (LHD) or 1026641-00-D (RHD) or newer.
13	ANTI PINCH SENSOR ASY RH	Unrestricted	PINCH SENSOR ASSEMBLY RIGHT	6007570-00-B	1	Smaller connector. Must use with 1004417-00-M (LHD) or 1026641-00-C (RHD) or earlier.
13	ANTI PINCH SENSOR ASY RH	Unrestricted	PINCH SENSOR ASSEMBLY RIGHT	6007570-00-C	1	Larger connector. Must use with 1004417-00-N (LHD) or 1026641-00-D (RHD) or newer.
14	push clip - anti pinch sen	Unrestricted	RIVET FOR PINCH SENSOR	1008784-00-A	12	

15	LIFTGATE SPRING STRUT LH	Unrestricted	LIFTGATE SPRING STRUT LEFT	6006611-00-B	1	
15	LIFTGATE GAS STRUT LH	Unrestricted	LIFTGATE GAS STRUT LH	6006608-00-B	1	
16	LIFTGATE POWER STRUT RH	Unrestricted	LIFTGATE POWER STRUT RIGHT	6006610-00-B	1	
16	LIFTGATE GAS STRUT RH	Unrestricted	LIFTGATE GAS STRUT RH	6009427-00-B	1	
17	BALL STUD - LIFTGATE	Unrestricted	BALL STUD - LIFTGATE	6008004-00-A	2	
18	ASY - SPOILER, LIFTGATE, CARBON FIBER	Unrestricted	ASY, SPOILER, LIFTGATE, CARBON FIBER	1023179-00-C	1	Includes adhesive. OK to use B or newer.
19	ADHESIVE TAPE, LIFTGATE SPOILER	Unrestricted	DOUBLE SIDED ADHESIVE TAPE FOR LIFTGATE SPOILER	1023182-00-A	1	Extra adhesive
*	PRIMER, TAPE, 3M, No. 94	Unrestricted	PRIMER, TAPE, 3M, No. 94	1021050-00-A	**	use to increase bonding strength of adhesive tape on the spoiler

Rear Door Hinges and Fittings

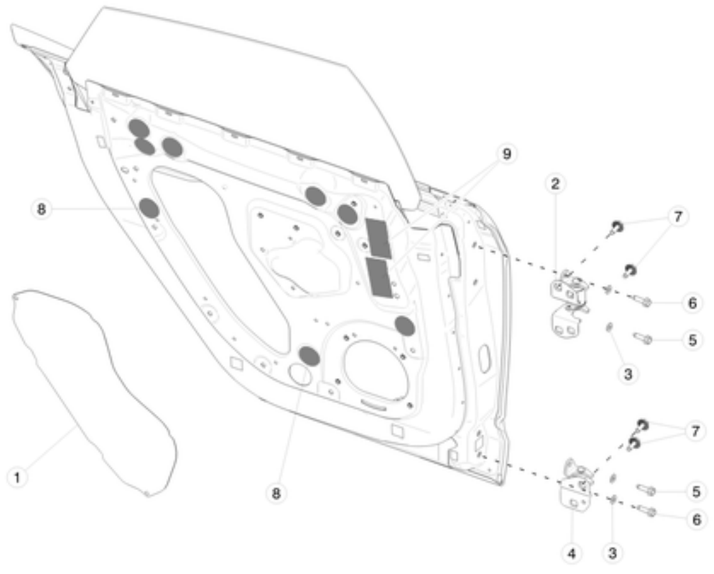

No	Part Name	Category	Part Description	Part Number	Qty	Comments
1	WATERSHIELD - REAR DOOR	Unrestricted	WATERSHIELD - REAR DOOR	1028429-00-A	2	
2	ASY-HINGE UPR RR	Unrestricted	ASY-HINGE UPPER REAR	6009555-00-E	2	
3	WSHR EPOXY M8x17x2.0	Unrestricted	WASHER EPOXY M8x17x2.0	1003133-00-A	4	
4	ASY-HINGE LWR LH	Unrestricted	ASY-HINGE LOWER, FRONT, LEFT	6009552-01-E	1	
4	ASY-HINGE LWR RH	Unrestricted	ASY-HINGE LOWER RIGHTH	6009569-01-E	1	
5	BLT HF MP D17 M8-1.25x26[8.8]ZnAl	Unrestricted	BOLT MATPOINT M8-1.25x26 ZINC ALUMINUM	1008571-00-C	4	Order in quantities of 25; minimum order: 25.
6	BLT,HEX,FLG,M8x25[9.8]	Unrestricted	BOLT, HEX, FLANGE, M8x25 [9.8]	1028183-00-A	4	
7	BLT HF MP D24 M8-1.25x21[9.8]ZnAl	Unrestricted	BOLT M8-1.25X25 MATPOINT SERRATED ZINC ALUMINUM BLACK	2007212-00-C	8	Order in quantities of 50; minimum order: 50.
8	TAPE - DOOR - D44	Unrestricted	DOOR TAPE - 44MM DIAMETER	1009583-00-A	18	Not Illustrated. Order in quantities of 10; minimum order: 10.
9	TAPE - DOOR - 45X85	Unrestricted	DOOR TAPE - 45MM X 85MM	1009585-00-A	2	Not Illustrated

DOOR GLASS REGULATORS

Front and Rear Door Glass Regulator

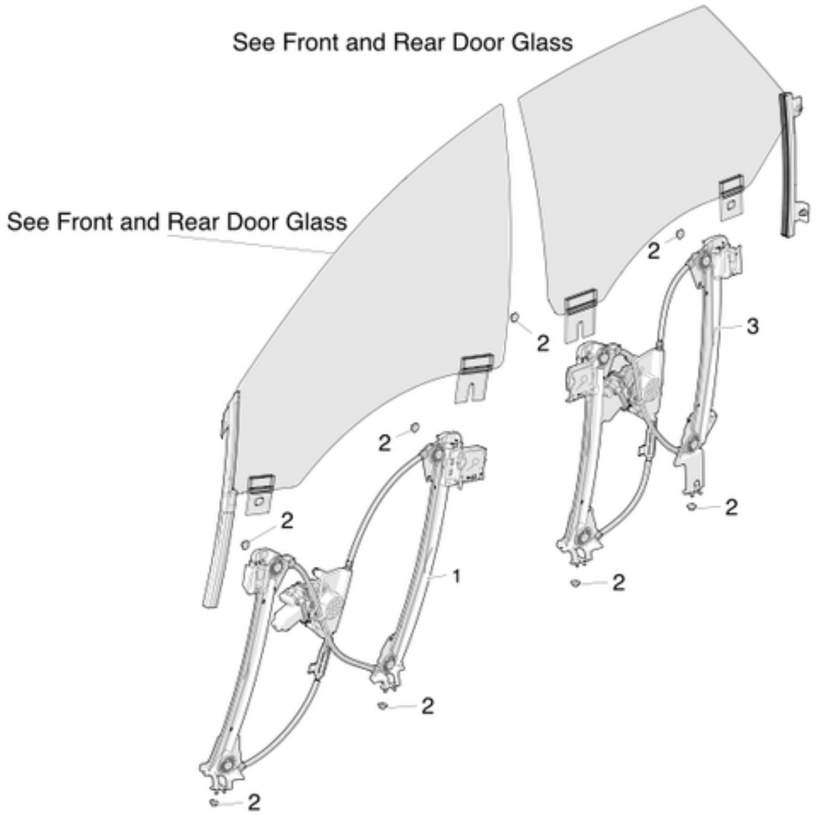

No	Part Name	Category	Part Description	Part Number	Qty	Comments
1	REGULATOR ASY FR DOOR LH	Unrestricted	REGULATOR ASSEMBLY FRONT DOOR LEFT	6006551-00-G	1	
1	REGULATOR ASY FR DOOR RH	Unrestricted	REGULATOR ASSEMBLY FRONT DOOR RIGHT	6006651-00-G	1	
2	NUT HEX M6-1.00 8 ZnAl 18 KEPS	Unrestricted	NUT HEX M6-1.00 ZINC ALUMINUM	1005822-00-A	16	
3	REGULATOR ASY RR DOOR LH	Unrestricted	REGULATOR ASSEMBLY REAR DOOR LEFT	6006334-00-G	1	
*	CLIP, WINDOW REGULATOR REINF, RR LH	Unrestricted	REINFORCEMENT CLIP, WINDOW REGULATOR, REAR LEFT	1026553-00-A	1	Order in quantities of 100; minimum order: 100.
3	REGULATOR ASY RR DOOR RH	Unrestricted	REGULATOR ASY REAR DOOR RIGHT	6006377-00-G	1	
*	CLIP, WINDOW REGULATOR REINF, RR RH	Unrestricted	CLIP, WINDOW REGULATOR REINFORCED, REAR RIGHT	1026847-00-A	1	

EXTERIOR DOOR HANDLES

Front Exterior Door Handle

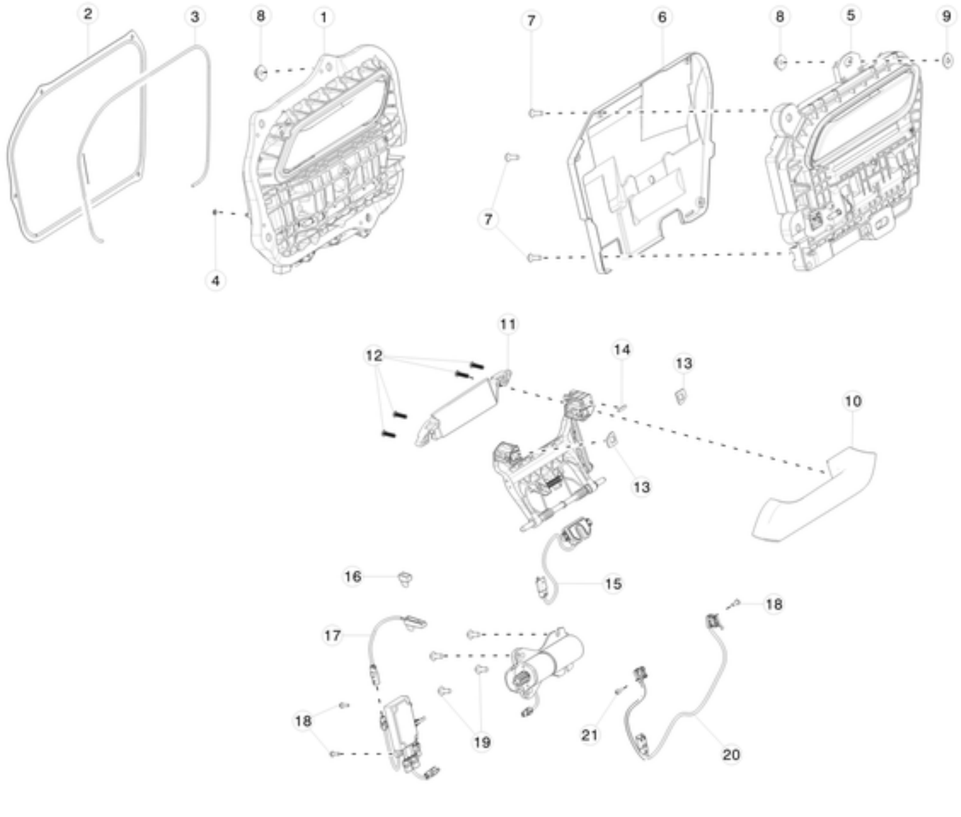

No	Part Name	Category	Part Description	Part Number	Qty	Comments
1	ASSY, DOOR HANDLE, FR LH, NO GRIP, SVC	Unrestricted	ASSY, DOOR HANDLE, FRONT LEFT, NO GRIP	1030273-S0-A	1	For cars produced before 10/26/16.Use with door shell 6006662-E0-E. Used with metal grips only. Order in pre-packaged multiples of 2,4 or 10.
1	ASSY, DOOR HANDLE, FR LH, NO GRIP, SVC	Unrestricted	ASSY, DOOR HANDLE, FRONT LEFT, NO GRIP	1030273-S0-B	1	For cars produced before 10/26/16.Use with door shell 6006662-E0-E. Can be used with plastic or metal grips (grips need to be ordered separately); if using metal grips, also need to use spacers 2x 1052476-00-A and 1x 1052477-00-A. Order in pre-packaged multiples of 2,4 or 10.
1	ASSY, DOOR HANDLE, FR RH, NO GRIP, SVC	Unrestricted	ASSY, DOOR HANDLE, FRONT RIGHT, NO GRIP	1030274-S0-A	1	For cars produced before 10/26/16.Use with door shell 6006622-E0-E. Used with metal grips only. Order in pre-packaged multiples of 2,4 or 10.
1	ASSY, DOOR HANDLE, FR RH, NO GRIP, SVC	Unrestricted	ASSY, DOOR HANDLE, FRONT RIGHT, NO GRIP	1030274-S0-B	1	For cars produced before 10/26/16.Use with door shell 6006622-E0-E. Can be used with plastic or metal grips (grips need to be ordered separately); if using metal grips, also need to use spacers 2x 1052476-00-A and 1x 1052477-00-A. Order in pre-packaged multiples of 2,4 or 10.
2	BACK SEAL, DOOR HANDLE OUTER, RH	Unrestricted	BACK SEAL, DOOR HANDLE OUTER, RIGHT	1021114-00-E	1	
2	BACK SEAL, DOOR HANDLE OUTER, LH	Unrestricted	BACK SEAL, DOOR HANDLE OUTER, LEFT	1008999-00-E	1	
3	SEAL, ADHESIVE BACKED	Unrestricted	ADHESIVE BACKED SEAL	1012717-00-B	2	Each roll is 30 feet or 9,144 millimeters.
4	PUSH-NUT 5/32"x17/64"x1/32"	Unrestricted	PUSH-NUT 5/32"x17/64"x1/32"	1067906-00-A	4	Use when replacing Back Seal, Door Handle Otr
5	ASSY, DOOR HANDLE, FR RH, NO GRIP, SVC	Unrestricted	ASSY, DOOR HANDLE, FR RH, NO GRIP, SVC		1	For vehicles between 10/26/2016 and 7/24/17,pls refer to technote TN-17-10-002 for ordering parts.Use with door shell 6006622-E0-G.
5	ASSY, DOOR HANDLE, FR LH, NO GRIP, SVC	Unrestricted	ASSY, DOOR HANDLE, FR LH, NO GRIP, SVC		1	For vehicles between 10/26/2016 and 7/24/17,pls refer to technote TN-17-10-002 for ordering parts.Use with door shell 6006662-E0-G.
*	ASY- EXT HANDLE, LH, GEN3, NO GRIP, SVC	Unrestricted	ASY- EXT HANDLE, LH, GEN3, NO GRIP, SVC	1100299-S0-A	1	Use on cars produced on or after 7/24/17
*	ASY- EXT HANDLE, RH, GEN3, NO GRIP, SVC	Unrestricted	ASY- EXT HANDLE, RH, GEN3, NO GRIP, SVC	1100300-S0-A	1	Use on cars produced on or after 7/24/17
*	ASSEMBLY, DOOR HANDLE 3.0 CTLR	Unrestricted	ASSEMBLY, DOOR HANDLE 3.0 CTLR	1069651-00-C	1	Use on cars produced on or after 7/24/17. 1069651-00-C can replace older revisions.

6	HARD COVER, EXT. DOOR HANDLE, RH	Unrestricted	HARD COVER, EXT. DOOR HANDLE, RH	1064744-00-B	1	For vehicles produced on and after October 26th, 2016. Use only with door handles 1071881-S0-A and 1071885-S0-A
6	HARD COVER, EXT. DOOR HANDLE, LH	Unrestricted	HARD COVER, EXT. DOOR HANDLE, LH	1063215-00-B	1	For vehicles produced on and after October 26th, 2016. Use only with door handles 1071880-S0-A and 1071884-S0-A
7	SCREW,FC,50x15,STL,ZNNI,DELTAPT	Unrestricted	SCREW,FC,50x15,STL,ZNNI,DELTAPT	1069401-00-A	10	
8	NUT HEX M6-1.00 8 ZnAl 18 KEPS	Unrestricted	NUT HEX M6-1.00 ZINC ALUMINUM	1005822-00-A	8	
9	WASHER, 6.0x18x1.6mm, EPOXY	Unrestricted	WASHER, 6.0x18x1.6mm, EPOXY	1016456-00-B	24	Order in quantities of 50; minimum order: 50.
10	GRIP, DOOR OUTER RH	Unrestricted	GRIP, DOOR OUTER, RH	1007730-00-B	1	For vehicles built before August 15, 2016, with metal grips.
10	GRIP, DOOR OUTER LH	Unrestricted	GRIP, DOOR OUTER, LH	1008986-00-B	1	For vehicles built before August 15, 2016, with metal grips.
10	GRIP, DOOR OUTER RH	Unrestricted	GRIP, DOOR OUTER, RH	1036480-00-B	1	For vehicles built on or after August 15, 2016 with plastic grips. Only use with cars with plastic door handle grips, not interchangeable with metal grips.
10	GRIP, DOOR OUTER LH	Unrestricted	GRIP, DOOR OUTER, LH	1036479-00-B	1	For vehicles built on or after August 15, 2016 with plastic grips. Only use with cars with plastic door handle grips, not interchangeable with metal grips.
11	BACKPLATE, DR HANDLE OTR RH - UNPAINTED	Unrestricted	BACKPLATE, DOOR HANDLE OUTER RIGHT - UNPAINTED	1007729-00-D	1	
11	BACKPLATE, DR HANDLE OTR LH - UNPAINTED	Unrestricted	BACKPLATE, DOOR HANDLE OUTER LEFT - UNPAINTED	1008982-00-D	1	
12	BLT,M4-0.7x16,SHBC,TRX,9.8, ZnNi 1000	Unrestricted	BOLT, M4-0.7x16, SHBC, TORX, 9.8, ZINC NICKEL 1000	1012482-00-B	8	Replace when removed
13	SPACER, GRIP, EXT DIE CAST DOOR HANDLE	Unrestricted	SPACER, GRIP, EXT DIE CAST DOOR HANDLE	1052476-00-A	2	Need to be used when installing metal door handle grip into plastic door handle carrier assembly(-B).
14	SPACER, GRIP, EXT DIE CAST DOOR HANDLE	Unrestricted	SPACER, GRIP, EXT DIE CAST DOOR HANDLE	1052477-00-A	1	Need to be used when installing metal door handle grip into plastic door handle carrier assembly(-B).
15	SENSOR, PRESS, DOOR HANDLE OUTER	Unrestricted	SENSOR, PRESS, DOOR HANDLE OUTER	1007750-00-C	1	Fully interchangeable with 1007750-00-B
16	HANDLE, LED PLUG, LH	Unrestricted	HANDLE, LED PLUG, LEFT	1017592-00-B	1	Base package.
16	HANDLE, LED PLUG, RH	Unrestricted	HANDLE, LED PLUG, RIGHT	1017736-00-B	1	Base package.
17	LED ASY, DOOR HANDLE OUTER RH	Unrestricted	LED ASSEMBLY, DOOR HANDLE OUTER RIGHT	1007748-00-F	1	OK to replace -D or -E. If PCBA is changed to 1018745-00-H, LED must be changed to 1007748-00-E or newer.
17	LED ASY, DOOR HANDLE OUTER LH	Unrestricted	LED ASSEMBLY, DOOR HANDLE OUTER LEFT	1008995-00-F	1	OK to replace -D or -E. If PCBA is changed to 1018745-00-H, LED must be changed to 1008995-00-E or newer.
18	SCR PT M3.0x1.12x10 TORX	Unrestricted	SCREW PT M3.0x1.12x10 TORX	1008307-00-A	2	Use with 1016009-00-E. Position switch to fork (plastic).
19	BLT,TPG,WSHR,TRX,M5-PTx12[St]-06	Unrestricted	BLT,TPG,WSHR,TRX,M5	1009289-00-B	8	Use to fasten handle motor to carrier.
20	ASY, POS SWITCH, DOOR HANDLE EXTERIOR	Unrestricted	POSITION SWITCH ASSEMBLY, EXTERIOR DOOR HANDLE	1016009-00-E	2	
21	SCR, M3x0.5x3 PAN HEAD TRILOBULAR	Unrestricted	SCREW, M3x0.5x3 PAN HEAD TRILOBULAR	1024286-00-A	2	Use with 1016009-00-E. Position switch to fork (metal).
*	ASY,PIGTAIL,MDLS,DOOR HANDLE,FRONT	Unrestricted	ASY,PIGTAIL,MDLS,DOOR HANDLE,FRONT	1069106-00-B	1	
*	ASY PLATE, FR DOOR, RH	Unrestricted	ASY PLATE, FR DOOR, RH	1037846-00-D	1	
*	ASY PLATE, FR DOOR, LH	Unrestricted	ASY PLATE, FR DOOR, LH	1037847-00-D	1	
*	LED ASY, DOOR HANDLE 3.0 OUTER RH	Unrestricted	LED ASY, DOOR HANDLE 3.0 OUTER RH	1109174-00-A	1	
*	LED ASY, DOOR HANDLE 3.0 OUTER LH	Unrestricted	LED ASY, DOOR HANDLE 3.0 OUTER LH	1109173-00-A	1	
*	BLT,BTN,TRX,M5x16[10.9]-BK-X-SP-05	Unrestricted	BLT,BTN,TRX,M5x16[10.9]-BK-X-SP-05	1015888-00-C	6	
*	KLUBER MR3 PFPE LUBRICANT	Unrestricted	KLUBER MR3 PFPE LUBRICANT	1063457-00-B	**	Lubricant for noisy door handles, order quantity 1 for 1 tube.
*	CONNECTOR CLIP, CASSETTE, YAZAKI	Unrestricted	CONNECTOR CLIP, CASSETTE	1024765-00-A	2	
*	PADDLE GEAR	Unrestricted	PADDLE GEAR	1042845-00-A	1	
*	MOTOR, DOOR HANDLE 3.0 OUTER	Unrestricted	MOTOR, DOOR HANDLE 3.0 OUTER	1116199-00-B	1	Use only on vehicles with Door Handle 3.0

Rear Exterior Door Handle

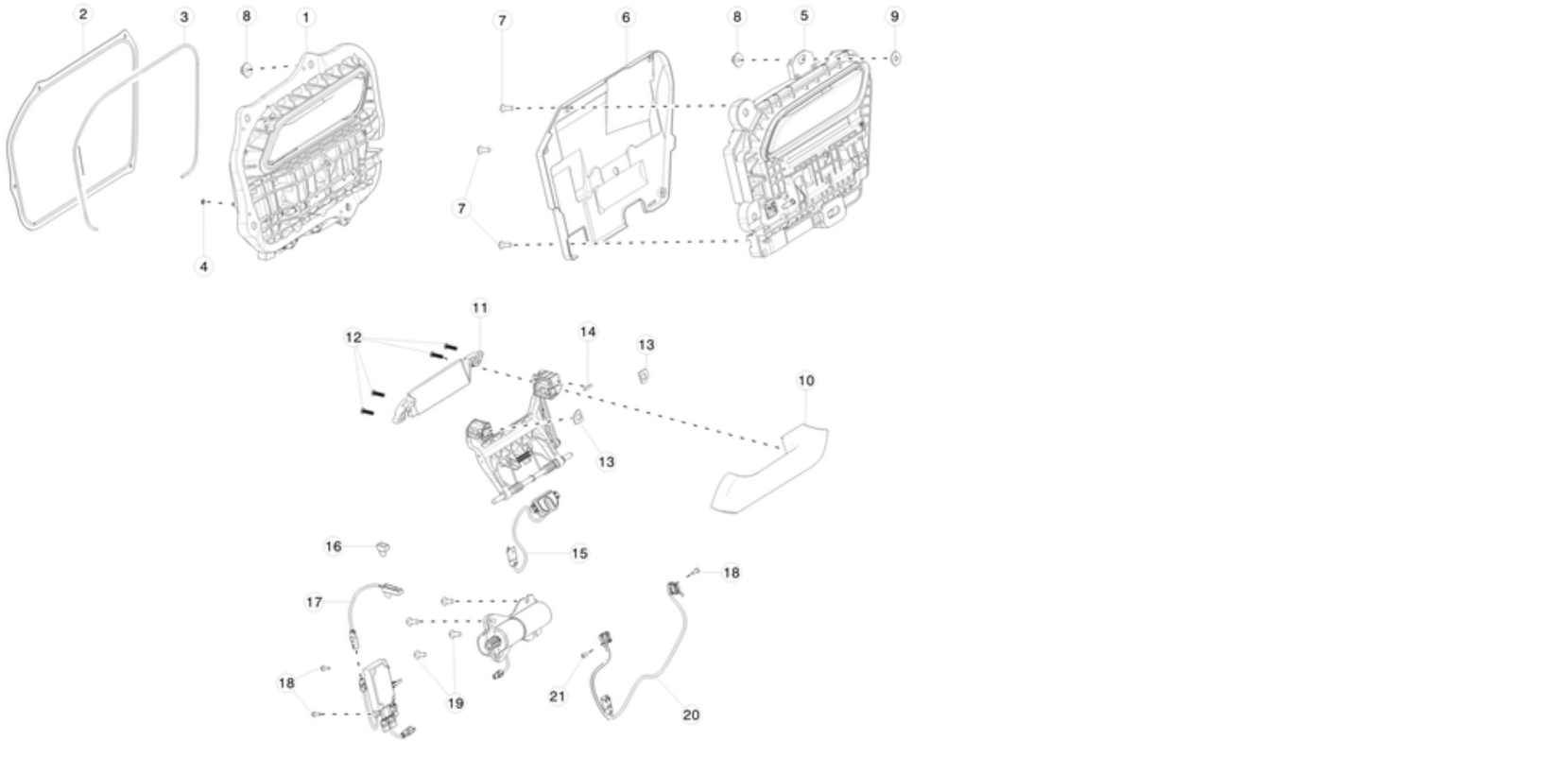

No	Part Name	Category	Part Description	Part Number	Qty	Comments
1	ASSY, DOOR HANDLE, RR LH, NO GRIP, SVC	Unrestricted	ASSEMBLY, DOOR HANDLE, REAR LEFT, NO GRIP	1030275-S0-A	1	For cars produced before 10/26/16.Use with door shell 6006394-E0-F. Use with metal grips only. Order in pre-packaged multiples of 2,4 or 10.
1	ASSY, DOOR HANDLE, RR LH, NO GRIP, SVC	Unrestricted	ASSEMBLY, DOOR HANDLE, REAR LEFT, NO GRIP	1030275-S0-B	1	For cars produced before 10/26/16.Use with door shell 6006394-E0-F. Can be used with plastic or metal grips (grips need to be ordered separately); if using metal grips, also need to use spacers 2x 1052476-00-A and 1x 1052477-00-A. Order in pre-packaged multiples of 2,4 or 10.
1	ASSY, DOOR HANDLE, RR RH, NO GRIP, SVC	Unrestricted	ASSEMBLY, DOOR HANDLE, REAR RIGHT, NO GRIP	1030276-S0-A	1	For cars produced before 10/26/16.Use with door shell 6006566-E0-F.Use with metal grips only. Order in pre-packaged multiples of 2,4 or 10.
1	ASSY, DOOR HANDLE, RR RH, NO GRIP, SVC	Unrestricted	ASSEMBLY, DOOR HANDLE, REAR RIGHT, NO GRIP	1030276-S0-B	1	For cars produced before 10/26/16.Use with door shell 6006566-E0-F. Can be used with plastic or metal grips (grips need to be ordered separately); if using metal grips, also need to use spacers 2x 1052476-00-A and 1x 1052477-00-A.Order in pre-packaged multiples of 2,4 or 10.
2	BACK SEAL, DOOR HANDLE OUTER, LH	Unrestricted	BACK SEAL, DOOR HANDLE OUTER, LEFT	1008999-00-E	1	
2	BACK SEAL, DOOR HANDLE OUTER, RH	Unrestricted	BACK SEAL, DOOR HANDLE OUTER, RIGHT	1021114-00-E	1	
3	SEAL, ADHESIVE BACKED	Unrestricted	ADHESIVE BACKED SEAL	1012717-00-B	2	Each roll is 30 feet or 9,144 millimeters.
4	PUSH-NUT 5/32x17/64"x1/32""	Unrestricted	PUSH-NUT 5/32x17/64"x1/32""	1067906-00-A	4	Use when replacing Back Seal, Door Handle Otr
5	ASSY, DOOR HANDLE, RR RH, NO GRIP, SVC	Unrestricted	ASSY, DOOR HANDLE, RR RH, NO GRIP, SVC		1	For vehicles between 10/26/2016 and 7/24/17,pls refer to technote TN-17-10-002 for ordering parts.Use with door shell 6006566-E0-G.
5	ASSY, DOOR HANDLE, RR LH, NO GRIP, SVC	Unrestricted	ASSY, DOOR HANDLE, RR LH, NO GRIP, SVC		1	For vehicles between 10/26/2016 and 7/24/17,pls refer to technote TN-17-10-002 for ordering parts.Use with door shell 6006394-E0-G.
*	ASY- EXT HANDLE, LH, GEN3, NO GRIP, SVC	Unrestricted	ASY- EXT HANDLE, LH, GEN3, NO GRIP, SVC	1100299-S0-A	1	Use on cars produced on or after 7/24/17
*	ASY- EXT HANDLE, RH, GEN3, NO GRIP, SVC	Unrestricted	ASY- EXT HANDLE, RH, GEN3, NO GRIP, SVC	1100300-S0-A	1	Use on cars produced on or after 7/24/17
*	ASSEMBLY, DOOR HANDLE 3.0 CTLR	Unrestricted	ASSEMBLY, DOOR HANDLE 3.0 CTLR	1069651-00-C	1	Use on cars produced on or after 7/24/17. 1069651-00-C can replace older revisions.
6	HARD COVER, EXT. DOOR HANDLE, RH	Unrestricted	HARD COVER, EXT. DOOR HANDLE, RH	1064744-00-B	1	For vehicles produced on and after October 26th, 2016. Use only with door handles 1071881-S0-A and 1071885-S0-A

6	HARD COVER, EXT. DOOR HANDLE, LH	Unrestricted	HARD COVER, EXT. DOOR HANDLE, LH	1063215-00-B	1	For vehicles produced on and after October 26th, 2016. Use only with door handles 1071880-S0-A and 1071884-S0-A
7	SCREW,FC,50x15,STL,ZNNI,DELTAPT	Unrestricted	SCREW,FC,50x15,STL,ZNNI,DELTAPT	1069401-00-A	10	
8	NUT HEX M6-1.00 8 ZnAl 18 KEPS	Unrestricted	NUT HEX M6-1.00 ZINC ALUMINUM	1005822-00-A	8	
9	WASHER, 6.0x18x1.6mm, EPOXY	Unrestricted	WASHER, 6.0x18x1.6mm, EPOXY	1016456-00-B	24	Order in quantities of 50; minimum order: 50.
10	GRIP, DOOR OUTER RH	Unrestricted	GRIP, DOOR OUTER RH	1007730-00-B	1	For vehicles built before August 15, 2016, with metal grips.
10	GRIP, DOOR OUTER LH	Unrestricted	GRIP, DOOR OUTER, LH	1008986-00-B	1	For vehicles built before August 15, 2016, with metal grips.
10	GRIP, DOOR OUTER RH	Unrestricted	GRIP, DOOR OUTER, RH	1036480-00-B	1	For vehicles built on or after August 15, 2016 with plastic grips. Only use with cars with plastic door handle grips, not interchangeable with metal grips.
10	GRIP, DOOR OUTER LH	Unrestricted	GRIP, DOOR OUTER, LH	1036479-00-B	1	For vehicles built on or after August 15, 2016 with plastic grips. Only use with cars with plastic door handle grips, not interchangeable with metal grips.
11	BACKPLATE, DR HANDLE OTR RH - Unpainted	Unrestricted	BACKPLATE, DOOR HANDLE OUTER RIGHT - UNPAINTED	1007729-00-D	1	
11	BACKPLATE, DR HANDLE OTR LH - unpainted	Unrestricted	BACKPLATE, DOOR HANDLE OUTER LEFT - UNPAINTED	1008982-00-D	1	
12	BLT,M4-0.7x16,SHBC,TRX,9.8, ZnNi 1000	Unrestricted	BOLT, M4-0.7x16, SHBC, TORX, 9.8, ZINC NICKEL 1000	1012482-00-B	8	Replace when removed
13	SPACER, GRIP, EXT DIE CAST DOOR HANDLE	Unrestricted	SPACER, GRIP, EXT DIE CAST DOOR HANDLE	1052476-00-A	2	Need to be used when installing metal door handle grip into plastic door handle carrier assembly(-B).
14	SPACER, GRIP, EXT DIE CAST DOOR HANDLE	Unrestricted	SPACER, GRIP, EXT DIE CAST DOOR HANDLE	1052477-00-A	1	Need to be used when installing metal door handle grip into plastic door handle carrier assembly(-B).
15	SENSOR, PRESS, DOOR HANDLE OUTER	Unrestricted	SENSOR, PRESS, DOOR HANDLE OUTER	1007750-00-C	1	Fully interchangeable with 1007750-00-B
16	HANDLE, LED PLUG, LH	Unrestricted	HANDLE, LED PLUG, LEFT	1017592-00-B	1	Base package.
16	HANDLE, LED PLUG, RH	Unrestricted	HANDLE, LED PLUG, RIGHT	1017736-00-B	1	Base package.
17	LED ASY, DOOR HANDLE OUTER LH	Unrestricted	LED ASSEMBLY, DOOR HANDLE OUTER LEFT	1008995-00-E	1	Tech package.
17	LED ASY, DOOR HANDLE OUTER RH	Unrestricted	LED ASSEMBLY, DOOR HANDLE OUTER RIGHT	1007748-00-F	1	Tech package.
18	SCR PT M3.0x1.12x10 TORX	Unrestricted	SCREW PT M3.0x1.12x10 TORX	1008307-00-A	2	
19	BLT,TPG,WSHR,TRX,M5-PTx12[St]-06	Unrestricted	BLT,TPG,WSHR,TRX,M5	1009289-00-B	8	Use to fasten handle motor to carrier
20	ASY, POS SWITCH, DOOR HANDLE EXTERIOR	Unrestricted	POSITION SWITCH ASSEMBLY, EXTERIOR DOOR HANDLE	1016009-00-E	2	
21	SCR, M3x0.5x3 PAN HEAD TRILOBULAR	Unrestricted	SCREW, M3x0.5x3 PAN HEAD TRILOBULAR	1024286-00-A	2	
*	ASY,PIGTAIL,MDLS,DOOR HANDLE,REAR	Unrestricted	ASY,PIGTAIL,MDLS,DOOR HANDLE,REAR	1069106-01-B	1	
*	PLATE, RR DOOR, RH	Unrestricted	PLATE, RR DOOR, RH	1067943-00-A	1	
*	PLATE, RR DOOR, LH	Unrestricted	PLATE, RR DOOR, LH	1064363-00-A	1	
*	LED ASY, DOOR HANDLE 3.0 OUTER RH	Unrestricted	LED ASY, DOOR HANDLE 3.0 OUTER RH	1109174-00-A	1	
*	LED ASY, DOOR HANDLE 3.0 OUTER LH	Unrestricted	LED ASY, DOOR HANDLE 3.0 OUTER LH	1109173-00-A	1	
*	BLT,BTN,TRX,M5x16[10.9]-BK-X-SP-05	Unrestricted	BLT,BTN,TRX,M5x16[10.9]-BK-X-SP-05	1015888-00-C	6	
*	Rivet Nut, M5x0.8, GRIP 0.5-3.3	Unrestricted	Rivet Nut, M5x0.8, GRIP 0.5-3.3	1037045-00-A	5	
*	KLUBER MR3 PFPE LUBRICANT	Unrestricted	KLUBER MR3 PFPE LUBRICANT	1063457-00-B	**	lubricant for noisy door handles, order quantity 1 for 1 tube
*	CONNECTOR CLIP, CASSETTE, YAZAKI	Unrestricted	CONNECTOR CLIP, CASSETTE	1024765-00-A	2	

INTERIOR DOOR HANDLES

Front Door Latch and Interior Release

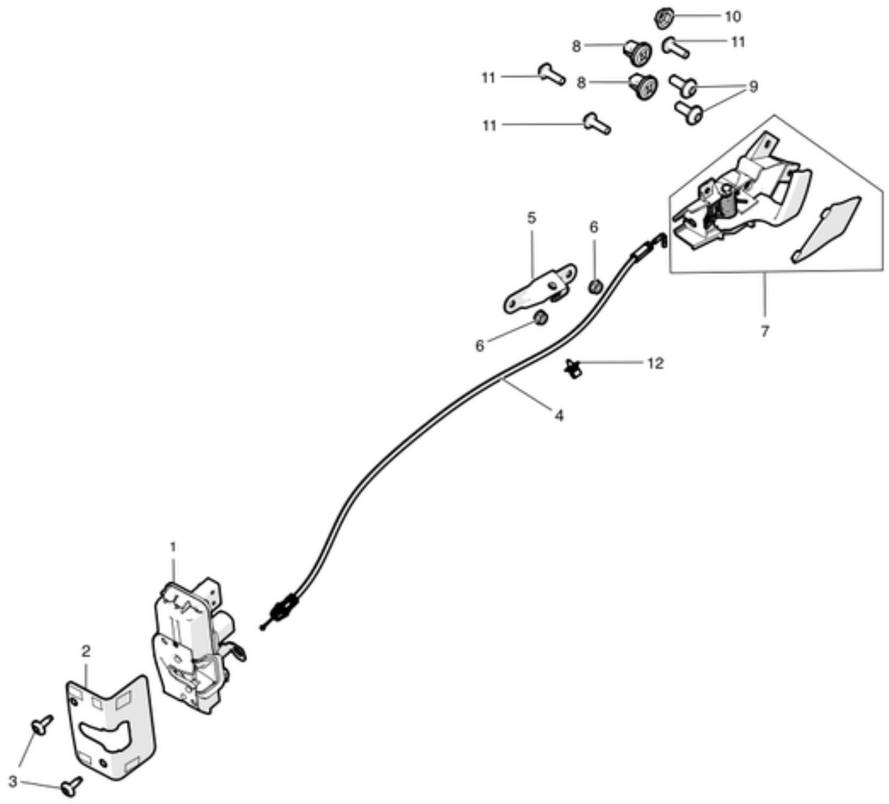

No	Part Name	Category	Part Description	Part Number	Qty	Comments
1	LATCH ASY FR LH	Unrestricted	LATCH ASSEMBLY FRONT LEFT	6008913-00-C	1	
1	LATCH ASY FR RH	Unrestricted	LATCH ASSEMBLY FRONT RIGHT	6008912-00-C	1	
2	REINF-LATCH LH	Unrestricted	REINFORCEMENT, LATCH, LEFT	6006535-00-B	1	
2	REINF-LATCH RH	Unrestricted	REINFORCEMENT, LATCH, RIGHT	6006635-00-B	1	
3	BLT CSKFLT TRX M6-1.00x18[9.8]ZnAl	Unrestricted	BOLT TORX M6-1.00x18 ZINC ALUMINUM	2007218	8	
4	RELEASE CABLE-FR DOOR	Unrestricted	RELEASE CABLE FRONT DOOR	1039668-00-B	2	
5	ASY - BRKT - FR DOOR PULL CUP LH	Unrestricted	DOOR PULL CUP BRACKET ASSEMBLY - FRONT LEFT	1003540-00-A	1	
5	ASY - BRKT - FR DOOR PULL CUP RH	Unrestricted	DOOR PULL CUP BRACKET ASSEMBLY - FRONT RIGHT	1003541-00-A	1	
6	NUT HF M6-1.00[8]ZnAl	Unrestricted	NUT M6-1.00 ZINC ALUMINUM	2007207	4	Order in quantities of 25; minimum order: 25.
7	ASY, OPENER, DOOR, LH, FRONT	Unrestricted	DOOR OPENER ASSEMBLY - LEFT FRONT	1002973-00-F	1	
8	GROMMET 11F 5	Unrestricted	GROMMET FOR M6 THREADS	1006642-00-A	2	Order in quantities of 50; minimum order: 50.
9	BLT,BTN,TRX,M5x16[10.9]-BK-X-SP-05	Unrestricted	BOLT, BUTTON HEAD, TORX, M5x16	1015888-00-C	2	
10	PALNUT TYPE-SD M5x10-15	Unrestricted	PALNUT M5x10	1009338-00-A	1	
11	SCR TRX WSHR M5x1.8-16 Zn	Unrestricted	SCREW TORX WASHER M5x1.8-16 ZINC	1009335-00-A	3	
12	CLIP, FIR TREE, DOOR CABLE	Unrestricted	CLIP, FIR TREE, DOOR CABLE	1016517-00-A	2	

13	INSERT, FR, LH, DOOR HANDLE	Unrestricted	DOOR HANDLE INSERT - LEFT FRONT	1002974-00-E	1	
*	ASY STRKR DOOR LAT, FRT / RR, RH / LH	Unrestricted	STRIKER, DOOR LATCH, FRONT/ REAR, RIGHT/LEFT	6006618-00-A	2	
*	BLT,TRX,CSKP,M8-1.25x25,[9.8]-M-09	Unrestricted	BOLT, TORX, M8-1.25x25	2007217-00-B	2	
*	TAPPING PLATE - STRIKER MOUNTING	Unrestricted	TAPPING PLATE - STRIKER MOUNTING	6008250-00-B	2	
*	RETAINER, DOOR CABLE	Unrestricted	RETAINER, DOOR CABLE	1016535-00-A	2	Not Illustrated

Rear Door Latch and Interior Release

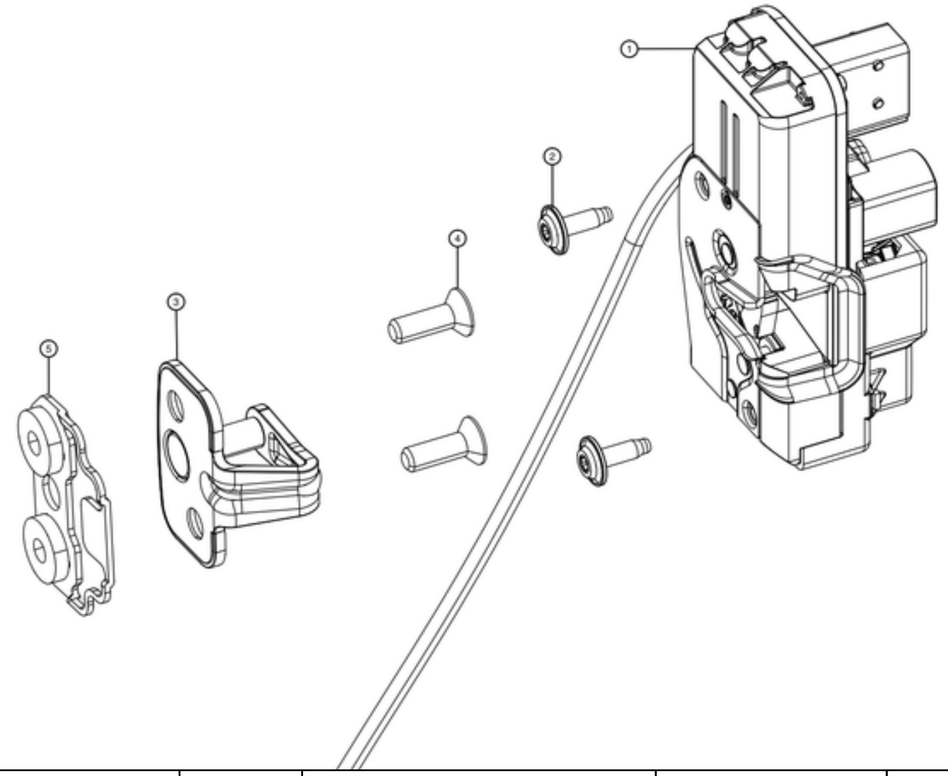

No	Part Name	Category	Part Description	Part Number	Qty	Comments
1	LATCH ASY RR LH	Unrestricted	LATCH ASSEMBLY REAR LEFT	6008911-00-C	1	
1	LATCH ASY RR LH	Unrestricted	LATCH ASSEMBLY REAR LEFT	6008911-00-D	1	
1	LATCH ASY RR RH	Unrestricted	LATCH ASSEMBLY REAR RIGHT	6008914-00-C	1	
1	LATCH ASY RR RH	Unrestricted	LATCH ASSEMBLY REAR RIGHT	6008914-00-D	1	
2	BLT CSKFLT TRX M6-1.00x18[9.8]ZnAl	Unrestricted	BOLT TORX M6-1.00x18 ZINC ALUMINUM	2007218	2	
3	ASY STRKR DOOR LAT - FRT / RR - RH / LH	Unrestricted	STRIKER, DOOR LATCH, FRONT/ REAR, RIGHT/LEFT	6006618-00-A	2	
5	TAPPING PLATE - STRIKER MOUNTING	Unrestricted	TAPPING PLATE - STRIKER MOUNTING	6008250-00-B	2	
6	BLT LOBED M8-1.25x25[9.8] MAG550	Unrestricted	BOLT, TORX, M8-1.25x25	2007217-00-B	2	
*	WATERSHIELD - REAR DOOR BS LATCH LH	Unrestricted	WATERSHIELD - REAR DOOR LATCH LEFT	1016698-00-A	1	
*	WATERSHIELD - REAR DOOR BS LATCH RH	Unrestricted	WATERSHIELD - REAR DOOR LATCH RIGHT	1016699-00-A	1	
7	ASY, OPENER, DOOR, LH, REAR	Unrestricted	DOOR OPENER ASSEMBLY - LEFT REAR	6007505-00-E	1	
7	ASY, OPENER, DOOR, RH, REAR	Unrestricted	DOOR OPENER ASSEMBLY - RIGHT REAR	1008131-00-E	1	
8	M5-16 TRX WSHR	Unrestricted	TORX WASHER M5x1.8-16 ZINC	1009335-00-A	6	

LATCHES, STRIKERS, AND PINCH SENSORS

Front Door Latch and Striker

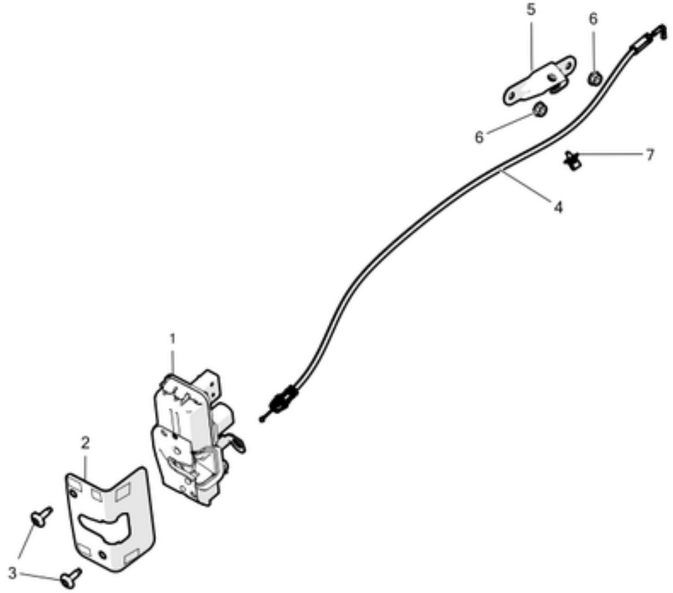

No	Part Name	Category	Part Description	Part Number	Qty	Comments
1	LATCH ASY FR LH	Unrestricted	LATCH ASSEMBLY FRONT LEFT	6008913-00-C	1	C to have CCC (China) marking. OK to use B and newer for North America, Europe, and APAC except China. Use C for China.
1	LATCH ASY FR RH	Unrestricted	LATCH ASSEMBLY FRONT RIGHT	6008912-00-C	1	C to have CCC (China) marking. OK to use B and newer for North America, Europe, and APAC except China. Use C for China.
2	REINF-LATCH LH	Unrestricted	REINFORCEMENT, LATCH, LEFT	6006535-00-B	1	
2	REINF-LATCH RH	Unrestricted	REINFORCEMENT, LATCH, RIGHT	6006635-00-B	1	
3	BLT CSKFLT TRX M6-1.00x18[9.8]ZnAl	Unrestricted	BOLT TORX M6-1.00x18 ZINC ALUMINUM	2007218	8	
4	RELEASE CABLE-FR DOOR	Unrestricted	RELEASE CABLE FRONT DOOR	6006555-00-B	2	Requires RETAINER, DOOR CABLE - 1016535-00-A
4	RELEASE CABLE-FR DOOR	Unrestricted	RELEASE CABLE FRONT DOOR	6006555-00-D	2	Does not require RETAINER, DOOR CABLE - 1016535-00-A. Use with 1002458-00-D and 1005855-00-D
4	RELEASE CABLE-FR DOOR	Unrestricted	RELEASE CABLE FRONT DOOR	1039668-00-B	2	Use with 1002458-00-F and 1005855-00-F
5	ASY - BRKT - FR DOOR PULL CUP LH	Unrestricted	DOOR PULL CUP BRACKET ASSEMBLY - FRONT LEFT	1003540-00-A	1	
5	ASY - BRKT - FR DOOR PULL CUP RH	Unrestricted	DOOR PULL CUP BRACKET ASSEMBLY - FRONT RIGHT	1003541-00-A	1	
6	NUT HF M6-1.00[8]ZnAl	Unrestricted	NUT M6-1.00 ZINC ALUMINUM	2007207	4	Order in quantities of 25; minimum order: 25.
7	CLIP, FIR TREE, DOOR CABLE	Unrestricted	CLIP, FIR TREE, DOOR CABLE	1016517-00-A	2	

Hood Latch and Release

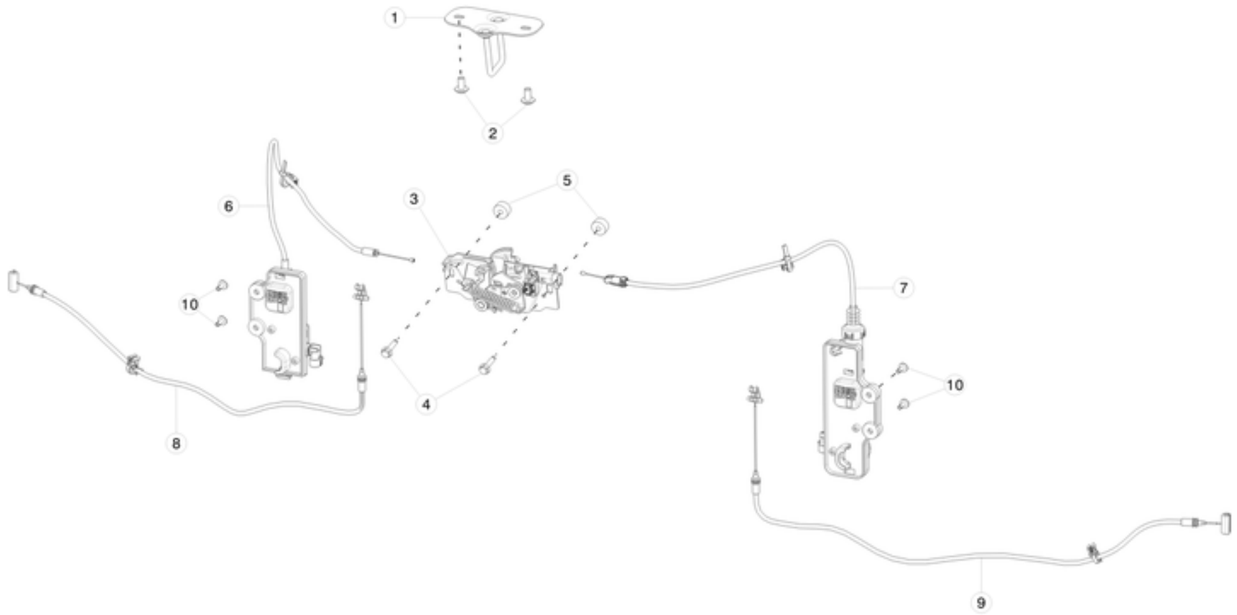

No	Part Name	Category	Part Description	Part Number	Qty	Comments
1	HOOD STRIKER	Unrestricted	HOOD STRIKER	1059507-00-B	1	
2	BOLT PANHEAD FLANGE TORX M8-1.25x16[9.8]ZINC ALUMINUM, BLACK	Unrestricted	BOLT PANHEAD FLANGE TORX M8-1.25x16[9.8]ZINC ALUMINUM, BLACK	1008833-01-A	2	
3	HOOD LATCH	Unrestricted	HOOD LATCH	1033011-00-C	1	Ok to replace 1033011-00-B
4	BLT HEX M6-1.00x25 [8.8] M ZnAl	Unrestricted	BLT HEX M6-1.00x25 [8.8] M ZnAl	1005817-00-A	2	
5	HOOD LATCH SPACER	Unrestricted	HOOD LATCH SPACER	1066937-00-A	2	
6	ASSY HOOD LATCH PRIMARY RELEASE	Unrestricted	CABLE HOOD LATCH PRIMARY RELEASE	1061814-00-B	1	
7	ASSY HOOD LATCH SECONDARY RELEASE	Unrestricted	CABLE HOOD LATCH SECONDARY RELEASE	1061816-00-B	1	
8	CABLE, PRIMARY MANUAL RELEASE	Unrestricted	CABLE, PRIMARY MANUAL RELEASE	1066699-00-A	1	
9	CABLE, SECONDARY MANUAL RELEASE	Unrestricted	CABLE, SECONDARY MANUAL RELEASE	1066700-00-A	1	
10	BOLT,M5x16,PF,TRX,STL [8.8],PTC,ECOFIX	Unrestricted	BOLT,M5x16,PF,TRX,STL[8.8],PTC,ECOFIX	1057342-00-A	4	

Liftgate Handle and Emergency Release

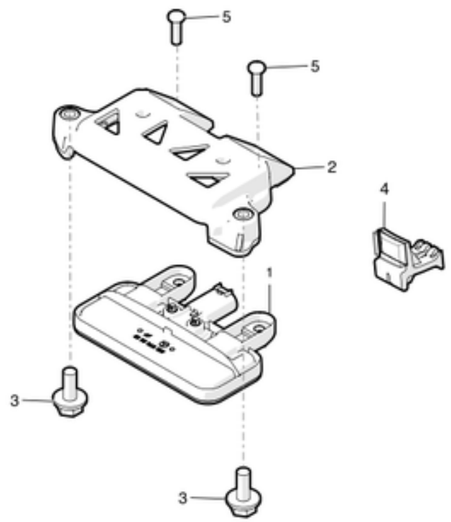

No	Part Name	Category	Part Description	Part Number	Qty	Comments
1	Handle - Liftgate	Unrestricted	HANDLE LIFTGATE	1007287-00-A	1	
2	Surround - Handle - Liftgate	Unrestricted	SURROUND, HANDLE, LIFTGATE	1007285-00-C	1	
3	BLT HF D14 M6-1.00x14[]ZnAl	Unrestricted	BOLT M6-1.00x14 ZINC ALUMINUM	1008853-00-A	2	
4	HANDLE - LIFTGATE EMERGENCY RELEASE	Unrestricted	HANDLE, LIFTGATE EMERGENCY RELEASE	1013417-00-B	1	
*	DUAL LOCK, 25.0 x 20.0	Unrestricted	DUAL LOCK 25MM X 20MM	1008246-00-B	1	
5	SCR ST PANFLG 4X14 D9	Unrestricted	SCREW PANHEAD FLANGE 4X14	1008854-00-A	2	

Liftgate Latch

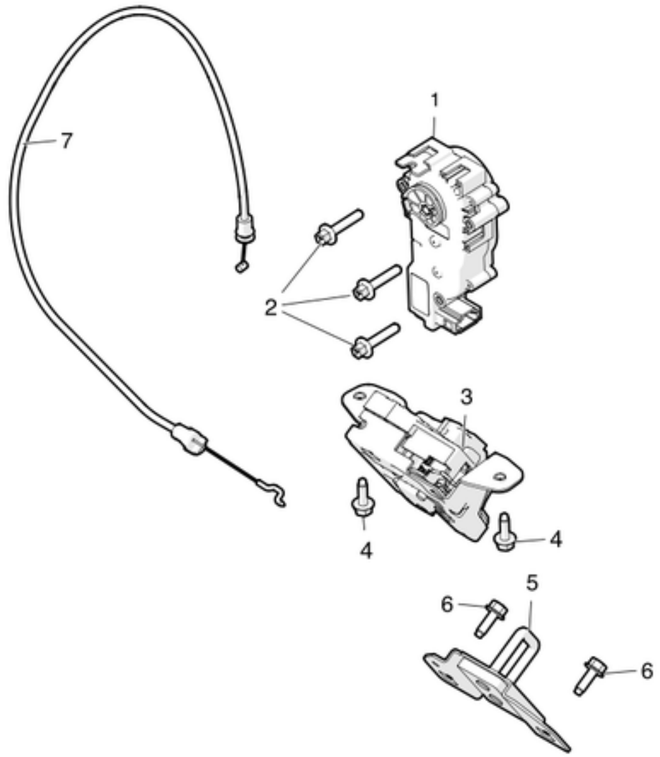

No	Part Name	Category	Part Description	Part Number	Qty	Comments
1	CINCHING ACTUATOR	Unrestricted	CINCHING ACTUATOR	1003549-00-A	1	
2	M5 X 30 BOLTS	Unrestricted	BOLT,TPG,TORXPLUS,5-PTx30-07	1003557-00-B	3	Order in quantities of 25; minimum order: 25.
3	ASY LIFTGATE LATCH PWR REL	Unrestricted	ASY LIFTGATE LATCH POWER RELEASE	6006654-00-B	1	Includes emergency release cable (not pictured).
4	M6 X 1.00 FASTENERS	Unrestricted	BOLT PANHEAD FLANGE M6-1.00x12 ZINC ALUMINUM	1008842-00-A	2	Order in quantities of 25; minimum order: 25.
5	STRIKER - LIFTGATE	Unrestricted	STRIKER - LIFTGATE	1009419-00-B	1	
6	BLT PANFLG TRX M6-1.0x14[9.8] ZnAl	Unrestricted	BOLT PANHEAD FLANGE TORX M6-1.0x14 ZINC ALUMINUM	1008644-00-A	2	
7	CABLE - CINCH LIFTGATE	Unrestricted	CABLE, CINCH LIFTGATE	1008186-00-B	1	From actuator to latch.
*	EDGE CLIP CABLE TIE, 1-3MM PANEL	Unrestricted	EDGE CLIP CABLE TIE	1020965-00-A	1	Use to install item #7. Order in quantities of 50; minimum order: 50.

Rear Door Latch and Striker

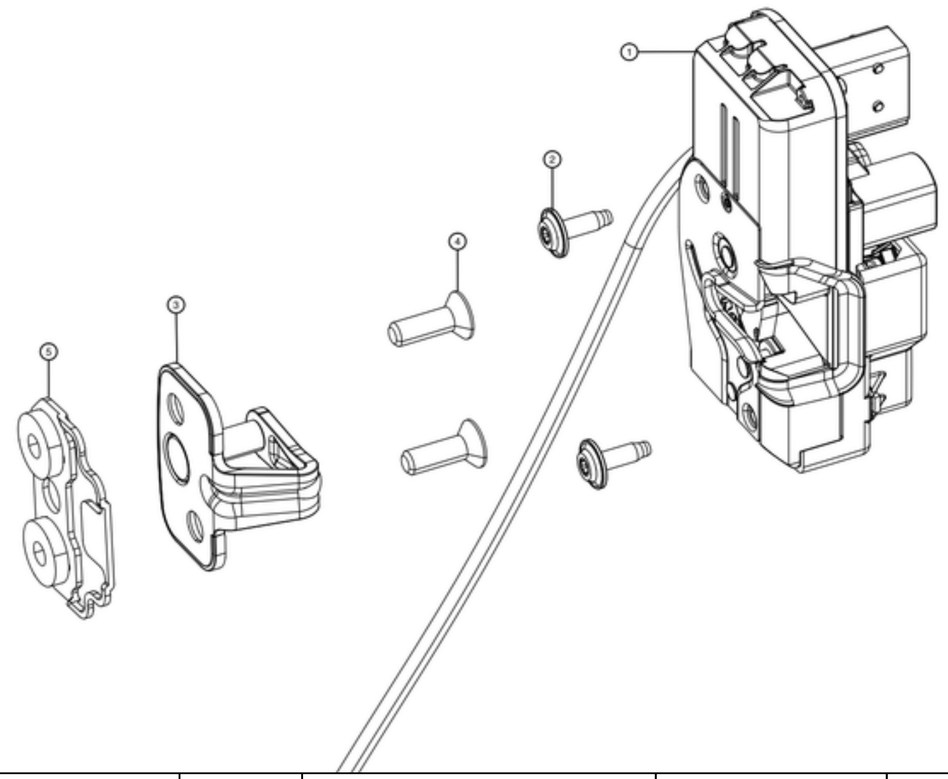

No	Part Name	Category	Part Description	Part Number	Qty	Comments
1	LATCH ASY RR LH	Unrestricted	LATCH ASSEMBLY REAR LEFT	6008911-00-D	1	
1	LATCH ASY RR RH	Unrestricted	LATCH ASSEMBLY REAR RIGHT	6008914-00-D	1	
2	BLT CSKFLT TRX M6-1.00x18[9.8]ZnAl	Unrestricted	BOLT TORX M6-1.00x18 ZINC ALUMINUM	2007218	2	
3	ASY STRKR DOOR LAT - FRT / RR - RH / LH	Unrestricted	STRIKER, DOOR LATCH, FRONT/ REAR, RIGHT/LEFT	6006618-00-A	2	
4	BLT LOBED M8-1.25x25[9.8] MAG550	Unrestricted	BOLT, TORX, M8-1.25x25	2007217-00-B	2	
5	TAPPING PLATE - STRIKER MOUNTING	Unrestricted	TAPPING PLATE - STRIKER MOUNTING	6008250-00-B	2	
*	WATERSHIELD - REAR DOOR BS LATCH LH	Unrestricted	WATERSHIELD - REAR DOOR LATCH LEFT	1016698-00-A	1	
*	WATERSHIELD - REAR DOOR BS LATCH RH	Unrestricted	WATERSHIELD - REAR DOOR LATCH RIGHT	1016699-00-A	1	

LIFTGATE

Liftgate Drain

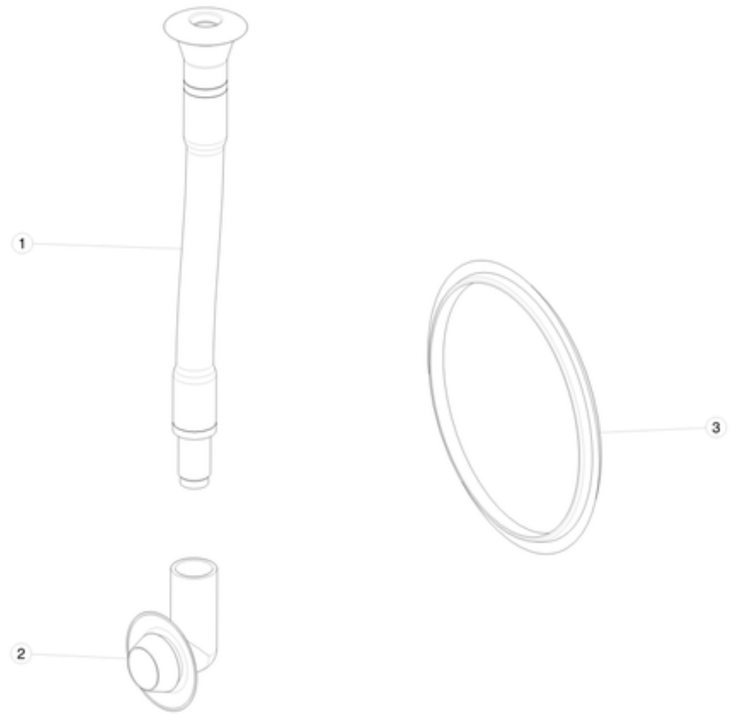

No	Part Name	Category	Part Description	Part Number	Qty	Comments
1	DRAIN TUBE ASM-LAMP HSNG	Unrestricted	DRAIN TUBE ASM-LAMP HSNG	1023057-00-A	1	
2	ELBOW-DRAIN TUBE ASM	Unrestricted	ELBOW-DRAIN TUBE ASM	1023052-00-A	1	
3	PLUG - DRAIN TUBE ACCESS	Unrestricted	PLUG - DRAIN TUBE ACCESS	1023383-00-A	1	

SEALS BODY CLOSURES

Front Door Seals

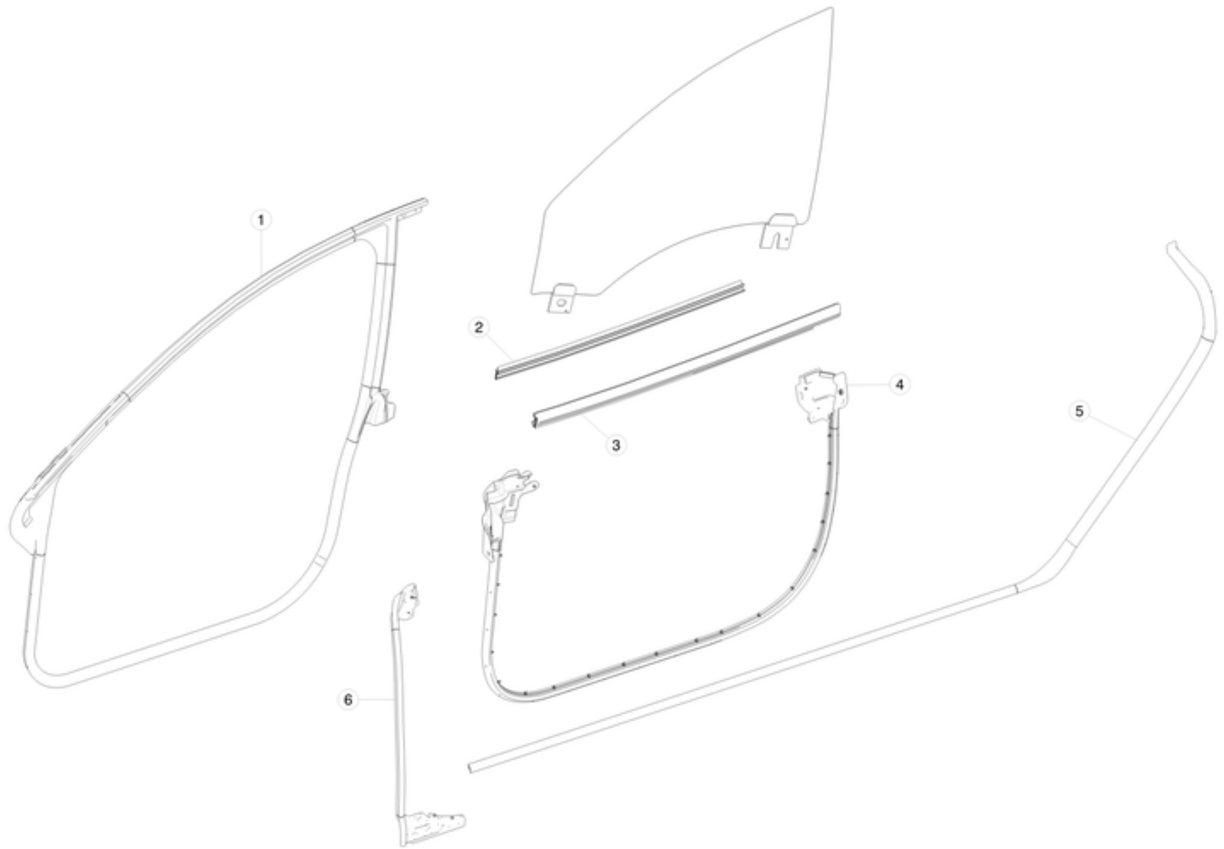

No	Part Name	Category	Part Description	Part Number	Qty	Comments
1	SEAL - BODY SIDE FR PRIMARY - LH	Unrestricted	SEAL, BODY SIDE FRONT PRIMARY, LEFT	6009583-99-L	1	6009583-99-L and 6009583-99-K are fully interchangeable. 6009583-99-L can replace 6009583-00-K, -99-J and -00-J
1	SEAL - BODY SIDE FR PRIMARY - RH	Unrestricted	SEAL, BODY SIDE FRONT PRIMARY, RIGHT	6009584-99-L	1	6009584-99-L and 6009584-99-K are fully interchangeable. 6009584-99-L can to replace 6009584-00-K, 99-J and -00-J
2	SEAL - DOOR FR INR BELT - LH	Unrestricted	SEAL, DOOR FRONT INNER BELT, LEFT	1038405-00-A	1	
2	SEAL - DOOR FR INR BELT - RH	Unrestricted	SEAL, DOOR FRONT INNER BELT, RIGHT	1038406-00-A	1	
3	SEAL - DOOR FR OTR BELT - LH	Unrestricted	SEAL, DOOR FRONT OUTER BELT, LEFT	1038393-00-A	1	
3	SEAL - DOOR FR OTR BELT - RH	Unrestricted	SEAL, DOOR FRONT OUTER BELT, RIGHT	1038394-00-A	1	
4	SEAL - DOOR FR - LH	Unrestricted	SEAL, DOOR FRONT, LEFT	6009593-00-D	1	
4	SEAL - DOOR FR - RH	Unrestricted	SEAL, DOOR FRONT, RIGHT	6009594-00-D	1	
5	SEAL - BODY SIDE RR SECONDARY - LH	Unrestricted	SEAL, BODY SIDE REAR SECONDARY, LEFT	6009587-00-C	1	
5	SEAL - BODY SIDE RR SECONDARY - RH	Unrestricted	SEAL, BODY SIDE REAR SECONDARY, RIGHT	6009588-00-C	1	
6	SEAL - DOOR FRONT A PILLAR MARGIN LH	Unrestricted	SEAL, DOOR FRONT A-PILLAR MARGIN LEFT	1005420-00-D	1	
6	SEAL - DOOR FRONT A PILLAR MARGIN RH	Unrestricted	SEAL, DOOR FRONT A-PILLAR MARGIN RIGHT	1005421-00-D	1	
*	TAPE, DOOR WATER EGRESS, 1"x4"	Unrestricted	DOOR WATER EGRESS DOOR TAPE - 1" X 4"	1018157-00-A	4	

Hood Seals

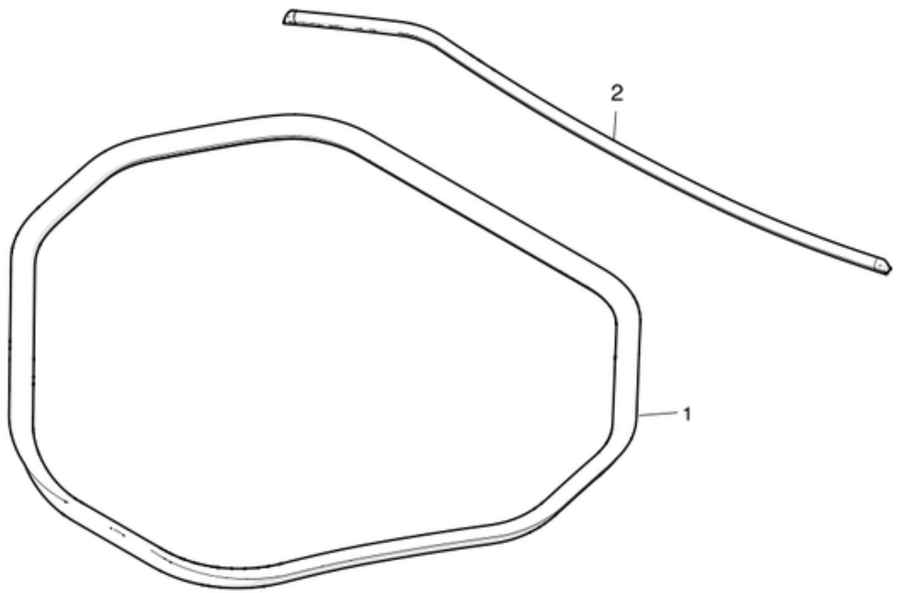

No	Part Name	Category	Part Description	Part Number	Qty	Comments
1	SEAL - HOOD	Unrestricted	SEAL, HOOD	1079982-00-A	1	
2	SEAL - HOOD TO COWL	Unrestricted	SEAL - HOOD TO COWL	1060710-00-A	1	

Rear Door Seals

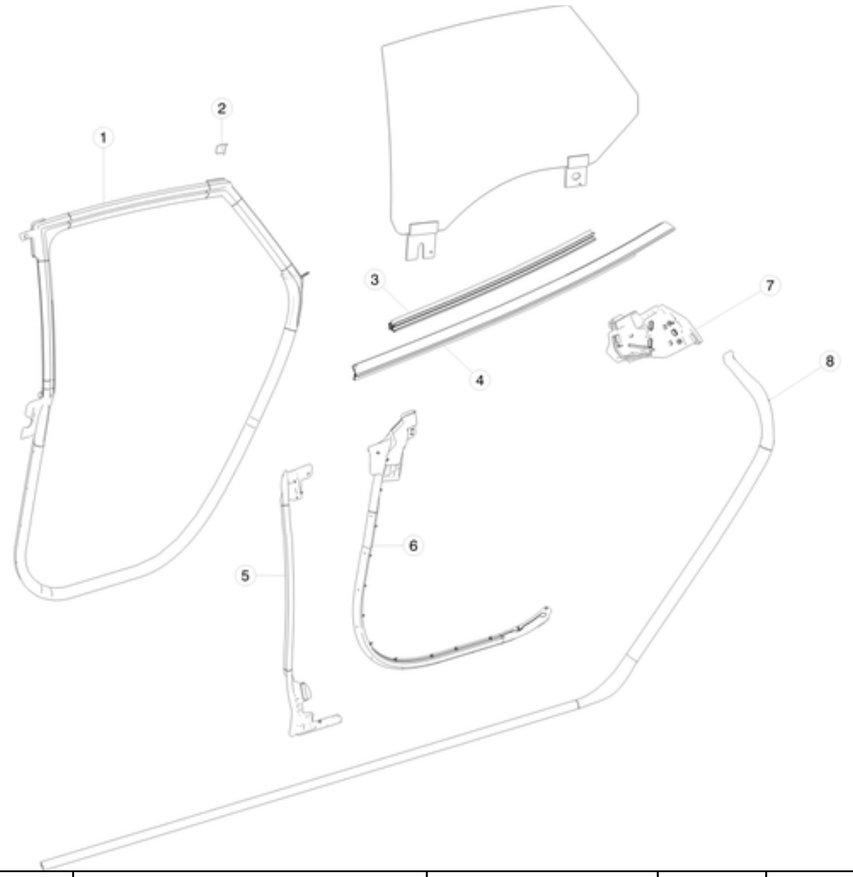

No	Part Name	Category	Part Description	Part Number	Qty	Comments
1	SEAL - BODY SIDE RR PRIMARY - LH	Unrestricted	SEAL, BODY SIDE REAR PRIMARY, LEFT	6009585-00-I	1	6009585-00-I and 6009585-00-H are fully interchangeable
1	SEAL - BODY SIDE RR PRIMARY - RH	Unrestricted	SEAL, BODY SIDE REAR PRIMARY, RIGHT	6009586-00-I	1	6009586-00-I and 6009586-00-H are fully interchangeable
*	SEAL, ADHESIVE BACKED	Unrestricted	ADHESIVE BACKED SEAL	1012717-00-B	2	Each roll is 30 feet or 9,144 millimeters. Use to install item #1.
2	BUTYL SHEET, 300x500mm, 2mm THICK	Unrestricted	BUTYL,NO BACKING,40x40,2mm THK	1019339-00-B	0.1	Use to install item #1.
3	SEAL - DOOR RR INR BELT - LH	Unrestricted	SEAL, DOOR REAR INNER BELT, LEFT	1038407-00-A	1	
3	SEAL - DOOR RR INR BELT - RH	Unrestricted	SEAL, DOOR REAR INNER BELT, RIGHT	1038408-00-A	1	
4	SEAL - DOOR RR OTR BELT - LH	Unrestricted	SEAL, DOOR REAR OUTER BELT, LEFT	1038395-00-A	1	
4	SEAL - DOOR RR OTR BELT - RH	Unrestricted	SEAL, DOOR REAR OUTER BELT, RIGHT	1038396-00-A	1	
5	SEAL - DOOR FRONT B PILLAR MARGIN LH	Unrestricted	SEAL, DOOR FRONT B-PILLAR MARGIN LEFT	1005422-00-D	1	
5	SEAL - DOOR FRONT B PILLAR MARGIN RH	Unrestricted	SEAL, DOOR FRONT B-PILLAR MARGIN RIGHT	1005423-00-D	1	
6	SEAL, DOOR RR, LH	Unrestricted	SEAL, DOOR REAR, LEFT	6009595-00-D	1	
6	SEAL, DOOR RR, RH	Unrestricted	SEAL, DOOR REAR, RIGHT	6009596-00-D	1	
7	SEAL - DOOR RR C PILLAR MARGIN - LH W/O LOWER DOOR EDGE	Unrestricted	SEAL, DOOR REAR C-PILLAR MARGIN, LEFT - WITHOUT LOWER DOOR EDGE	6009591-00-E	1	
7	SEAL - DOOR RR C PILLAR MARGIN - RH W/O LOWER DOOR EDGE	Unrestricted	SEAL, DOOR REAR C-PILLAR MARGIN, RIGHT - WITHOUT LOWER DOOR EDGE	6009592-00-E	1	
8	SEAL - BODY SIDE RR SECONDARY - LH	Unrestricted	SEAL, BODY SIDE REAR SECONDARY, LEFT	6009587-00-D	1	
8	SEAL - BODY SIDE RR SECONDARY - RH	Unrestricted	SEAL, BODY SIDE REAR SECONDARY, RIGHT	6009588-00-D	1	

*	TAPE, DOOR WATER EGRESS, 1"x4"	Unrestricted	DOOR WATER EGRESS DOOR TAPE - 1" X 4"	1018157-00-A	2	

Trunk Lid Seal

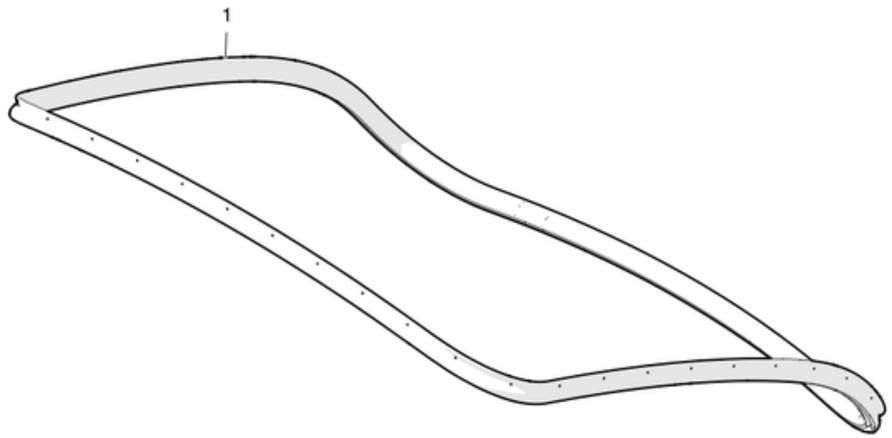

No	Part Name	Category	Part Description	Part Number	Qty	Comments
1	SEAL - LIFTGATE	Unrestricted	SEAL, LIFTGATE	6009582-00-D	1	

12V BATTERY AND FUSES

12V Battery and Fittings

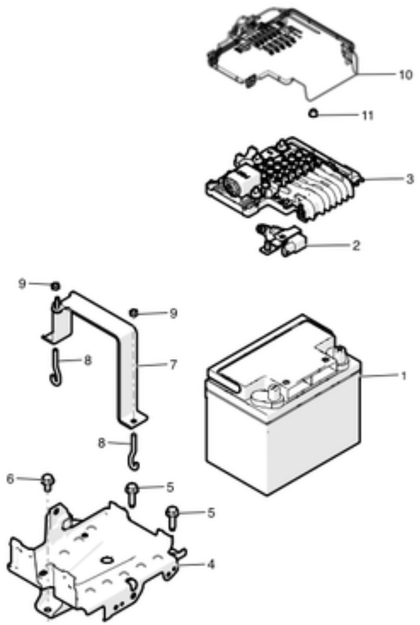

No	Part Name	Category	Part Description	Part Number	Qty	Comments
1	12 V BATTERY - C AND D NANO	Unrestricted	12 VOLT BATTERY - C AND D NANO	1083774-00-A	1	black case, red lid
2	SENSOR INTELLIGENT BATTERY	Unrestricted	INTELLIGENT BATTERY SENSOR	6007953	1	
4	TRAY, 12V BATTERY	Unrestricted	12 VOLT BATTERY TRAY	1028668-00-C	1	
5	BLT HEX FL M8-1.25X25 8.8 -M-ZnAl	Unrestricted	BOLT HEX FLAT HEAD M8-1.25X25 ZINC ALUMINUM	1005805-00-A	1	
6	BLT HF M8-1.25x16[8.8]ZnAl	Unrestricted	BOLT, M8-1.25x16MM, ZINC ALUMINUM	1005582-00-A	1	Order in quantities of 25; minimum order: 25.
9	NUT,FLG,HEX,M6x1.00[8]-14	Unrestricted	NUT, LOCK, HEX, FLANGE, M6x1.00	1004378-00-B	3	Order in quantities of 50; minimum order: 50.
11	NUT,M5,NYLOK,STEEL,CL8,ZN7um	Unrestricted	NUT, M5, NYLOK, STEEL	1011844-00-A	12	
12	NUT,M8,SERPRESS,STEEL,CL5S,ZN12um	Unrestricted	NUT, M8, SERPRESS, STEEL, CL5S, ZINC	1011843-00-A	1	Not illustrated - attaches DCDC+ cable to Fusebox
13	ADAPTER,POSITIVE TERMINAL,12V BATTERY	Unrestricted	12 VOLT BATTERY POSITIVE TERMINAL ADAPTER	1023696-00-B	1	
13	ADAPTER,POSITIVE TERMINAL,12V BATTERY	Unrestricted	12V BATTERY POSITIVE TERMINAL ADAPTER - DIE CAST	1051566-01-A	1	
14	SCREW,10-32,FLANGED, SERRATED,3/8 LENGTH	Unrestricted	SCREW, 10-32, FLANGED, SERRATED, 3/8 INCH LENGTH	1024078-00-A	1	Use with 1023696-00-B
15	BOLT, 5/16, SQUARE HEAD, 3/4" LENGTH	Unrestricted	BOLT, 5/16, SQUARE HEAD, 3/4 INCH LENGTH	1024082-00-A	1	Use with 1023696-00-B. Order in quantities of 25; minimum order: 25.
16	SAE ADAPTER,NEGATIVE TERMINAL,12V BATTERY	Unrestricted	12 VOLT BATTERY NEGATIVE TERMINAL SAE ADAPTER	1023921-01-C	1	Use with 1024463-00-A.
17	SCREW,10-32,FLANGED,SERRATED, 1 LENGTH	Unrestricted	SCREW,10-32 ,FLANGED, SERRATED, 1 INCH LENGTH	1024079-00-A	1	Use with 1051566-00-A and 1051566-01-A.

18	NUT, 5/16, FLANGED, SERRATED	Unrestricted	NUT, 5/16, FLANGED, SERRATED	1024085-00-A	1	Attaches fusebox to 12V battery, use with 1023696-00-B. Order in quantities of 50; minimum order: 50.
*	PYROTECHNIC BATTERY DISCONNECT	Unrestricted	PYROTECHNIC BATTERY DISCONNECT	1060392-00-A	1	Replace after collision resulting in airbag and/or pretensioner deployment. Included in 1034405-00-D fusebox
21	FUSEBOX - BATTERY - SEPARATOR	Unrestricted	BATTERY FUSEBOX SEPARATOR	1013273-00-C	1	
*	Cap, Battery Fused Terminal	Unrestricted	BATTERY FUSED TERMINAL CAP	1048955-00-C	1	
*	FRONT TRUNK 12 VOLT FUSE BOX	Unrestricted	FRONT TRUNK 12 VOLT FUSE BOX	1034405-00-E	1	For vehicles produced until October 12th, 2016. With option codes: DA01, DA02
*	FRONT TRUNK 12 VOLT FUSE BOX	Unrestricted	FRONT TRUNK 12 VOLT FUSE BOX	1034405-00-F	1	For vehicles produced between October 12th, 2016 and August 21st, 2017. With option codes: APH0, APH2
*	FUSEBOX,MDLS,12V,FRUNK,EFUSE	Unrestricted	FUSEBOX,MDLS,12V,FRUNK,EFUSE	1094405-00-D	1	For vehicles produced on and after August 21st, 2017. With option codes: APH3
*	FUSEBOX COVER,MDLS,12V,FRUNK	Unrestricted	FRONT TRUNK 12 VOLT FUSE BOX COVER	1034406-00-C	1	For vehicles produced until August 21st, 2017
*	FUSEBOX COVER,MDLS,12V,FRUNK,EFUSE	Unrestricted	FUSEBOX COVER,MDLS,12V,FRUNK,EFUSE	1119059-00-A	1	For vehicles produced on and after August 21st, 2017
*	ASY,CBL,MDLS,ALL4WD,BATT-	Unrestricted	ASY,CBL,MDLS,ALL4WD,BATT-	1032275-00-C	1	For vehicles produced until August 21st, 2017
*	ASY,CBL,MDLS,ALL,EFUSE,BATT-	Unrestricted	ASY,CBL,MDLS,ALL,EFUSE,BATT-	2092875-00-A	1	For vehicles produced on and after August 21st, 2017
*	FUSEBOX,MDLS,12V,CABIN,FRONT	Unrestricted	CABIN FUSE 12 VOLT FUSE BOX	1034409-00-A	1	
*	FUSEBOX,MDLS,12V,CABIN,FRONT,EFUSE	Unrestricted	CABIN FUSE 12 VOLT FUSE BOX	1094409-00-E	1	For vehicles produced on and after August 21st, 2017. Important note: Vehicles with X into S seats will require fuse 15A-S for F240 and F241. Rest of the seats will require 30A-S.
*	MOD,EFUSE,MS VARIANT	Unrestricted	MOD,EFUSE,MS VARIANT	1112379-90-D	1	Only for vehicles produced on and after August 21st, 2017. 1112379-90-D can replace 1112379-00-D

Relays and Fuses

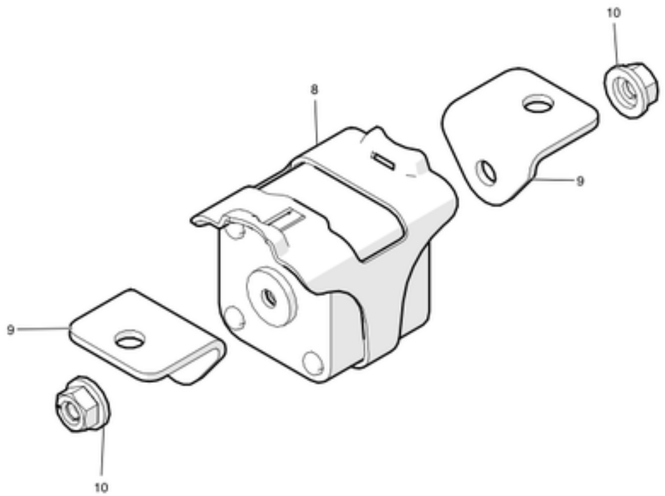

No	Part Name	Category	Part Description	Part Number	Qty	Comments
1	Fuse - Slo-Blo - 3.5A - 125V - SMD	Unrestricted	SLO-BLO FUSE - 3.5 AMP, 125 VOLT, SURFACE MOUNTED	1003428-00-A	1	Not Illustrated
3	FUSE - 15A - 32V - SMD - 1206	Unrestricted	FUSE,15 AMP, 32 VOLT, SMD,1207	1004888-00-A	1	Not Illustrated
5	FUSE - 50A - 500V - AC INLET	Unrestricted	FUSE, 50 AMP, 500 VOLT, AC INLET	2007294-00-A	1	Not Illustrated
6	FUSE - 50A - 500VAC/DC - A50QS50-4	Unrestricted	FUSE, 50 AMP, 500 VOLT, TYPE QS	1009154-00-A	1	Not Illustrated
7	FUSE - 100A - 500VAC/DC	Unrestricted	FUSE, 100 AMP, 500 VOLT, TYPE QS	2005690	1	Not Illustrated
8	ASY,FUSE,HVBAT,HI DURA,S3	Unrestricted	HIGH VOLTAGE BATTERY FUSE - S3 - HI DURA	1053124-00-A	1	use in 1031043-00-E
9	LUG - FUSE - HVBAT - MDLS	Unrestricted	HIGH VOLTAGE S2 BATTERY FUSE LUG	1006242-00-D	2	OK to use B or newer
10	M8 x 1.25 Hex Nut w/ Captive Conical Washer	Unrestricted	NUT, HEX, M8-1.25MM, STEEL, ZINC WITH PATCH AND WASHER	1004400-00-A	2	Order in quantities of 50; minimum order: 50.
11	RELAY,SPST,NO,12V,100A,PLUG-IN	Unrestricted	PLUG-IN RELAY, TYPE: SPST-NO, 12 VOLT, 100 AMP (LOCATION K1, K2, K11, K15, K16)	1009577-00-A	5	Not Illustrated - (K1, K2, K11, K15, K16, K110, K111, K112)
12	RELAY,SPDT,12V,40A,PLUG-IN	Unrestricted	PLUG-IN RELAY, TYPE: SPDT, 12 VOLT, 40 AMP (LOCATION: K12-K14)	1009578-00-A	3	Not Illustrated - (K12-K14)
13	RELAY,UISO,SPDT,12V,40A,PLUG-IN	Unrestricted	PLUG-IN RELAY - 40 AMP, 12 VOLT	1011602-00-A	2	Not Illustrated - (K3, K5, K21, K24)
*	FUSE,MIDI,30A,32V,2xM5	Unrestricted	FUSE, MIDI SIZE, 30 AMP, 32 VOLT, 2xM5 (LOCATION: F92)	1008255-00-A	1	(F92)
*	FUSE,MIDI,40A,32V,2xM5	Unrestricted	FUSE, MIDI SIZE, 40 AMP, 32 VOLT, 2xM5 (LOCATION: F82, F84)	1008256-00-A	2	(F82, F84)
*	FUSE,MIDI,50A,32V,2xM5	Unrestricted	FUSE, MIDI SIZE, 50 AMP, 32 VOLT, 2xM5 (LOCATION: F83, F85-F90)	1013638-00-A	7	(F83, F85-F90)
*	FUSE,MIDI,60A,32V,2xM5	Unrestricted	FUSE, MIDI SIZE, 60 AMP, 32 VOLT, 2xM5 (LOCATION: F80, F81)	1008257-00-A	2	(F80, F81)

*	FUSE,MINI,5A,32V	Unrestricted	FUSE, MINI SIZE, 5 AMP, 32 VOLT (LOCATION: F1, F3, F10-F12, F14, F16, F18-F20, F22, F24, F38, F40, F43, F44, F47, F49, F50, F53, F75, F76)	1008293-00-A	22	(F1, F3, F10-F12, F14, F16, F18-F20, F22, F24, F38, F40, F43, F44, F47, F49, F50, F53, F75, F76)
*	FUSE,MINI,10A,32V	Unrestricted	FUSE, MINI SIZE, 10 AMP, 32 VOLT (LOCATION: F27, F29, F32, F41, F48)	1008295-00-A	5	(F27, F29, F32, F41, F48)
*	FUSE,MINI,15A,32V	Unrestricted	FUSE, MINI SIZE, 15 AMP, 32 VOLT (LOCATION: F5, F7, F13, F21, F23, F25, F34, F35)	1008296-00-A	8	(F5, F7, F13, F21, F23, F25, F34, F35) Order in quantities of 25; minimum order: 25.
*	FUSE,MINI,20A,32V	Unrestricted	FUSE, MINI SIZE, 20 AMP, 32 VOLT (LOCATION: F6, F8, F15, F17, F45, F51, F74, F78)	1008297-00-A	8	
*	FUSE,MINI,25A,32V	Unrestricted	FUSE, MINI SIZE, 25 AMP, 32 VOLT (LOCATION: F9, F28, F30, F36, F37, F39, F77)	1008313-00-A	7	(F9, F28, F30, F36, F37, F39, F77)
*	FUSE,MINI,30A,32V	Unrestricted	MINI FUSE - 30 AMP, 32 VOLT	1008314-00-A	4	(F4, F34, F42, F46, F52, F79)
*	FUSE,MAXI,25A,32V	Unrestricted	FUSE, MAXI FUSE, 25 AMP, 32 VOLT (LOCATION: F57)	1008315-00-A	1	(F57)
*	FUSE,MAXI,30A,32V	Unrestricted	FUSE, MAXI, 30 AMP, 32 VOLT (LOCATION: F55,F56)	1008316-00-A	2	(F55,F56)
*	FUSE,MAXI,40A,32V	Unrestricted	FUSE, MAXI SIZE, 40 AMP, 32 VOLT	1008318-00-A	3	(F71-F73)
*	FUSE,MEGA,32V,225A	Unrestricted	FUSE, MEGA SIZE, 32 VOLT, 225 AMP (LOCATION: F94)	1018765-00-A	1	(F94)
*	FUSE,MEGA,32V,200A	Unrestricted	FUSE, MEGA SIZE, 32 VOLT, 200 AMP	1008260-00-A	1	
*	FUSE,JCASE,LOWPROFILE,20A	Unrestricted	FUSE, LOW PROFILE, 20 AMP	1052261-20-A	1	
*	FUSE,JCASE,LOWPROFILE,25A	Unrestricted	FUSE, LOW PROFILE, 25 AMP	1052261-25-A	1	
*	FUSE,JCASE,LOWPROFILE,30A	Unrestricted	FUSE, LOW PROFILE, 30 AMP	1052261-30-A	1	
*	FUSE,JCASE,LOWPROFILE,40A	Unrestricted	FUSE, LOW PROFILE, 40 AMP	1052261-40-A	1	
*	FUSE,JCASE,LOWPROFILE,50A	Unrestricted	FUSE, LOW PROFILE, 50 AMP	1052261-50-A	1	
*	FUSE,JCASE,LOWPROFILE,60A	Unrestricted	FUSE, LOW PROFILE, 60 AMP	1052261-60-A	1	
*	FUSE,JCASE,MINI,15A	Unrestricted	FUSE, MINI, 15A	1052262-15-A	1	
*	FUSE,JCASE,MINI,20A	Unrestricted	FUSE, MINI, 20A	1052262-20-A	1	
*	FUSE,JCASE,MINI,25A	Unrestricted	FUSE, MINI, 25A	1052262-25-A	1	
*	FUSE,JCASE,MINI,30A	Unrestricted	FUSE, MINI, 30A	1052262-30-A	1	
*	FUSE,JCASE,MINI,40A	Unrestricted	FUSE, MINI, 40A	1052262-40-A	1	
*	FUSE,MICRO2,5A	Unrestricted	FUSE, MICRO2, 5A	1052263-05-A	1	
*	FUSE,MICRO2,10A	Unrestricted	FUSE, MICRO2, 10A	1052263-10-A	1	Please order in multiples in 5; minimum order is 5.
*	FUSE,MICRO2,15A	Unrestricted	FUSE, MICRO2, 15A	1052263-15-A	1	Order in quantities of 5; minimum order: 5.
*	FUSE,MICRO2,20A	Unrestricted	FUSE, MICRO2, 20A	1052263-20-A	1	Order in quantities of 5; minimum order: 5.
*	FUSE,MICRO2,25A	Unrestricted	FUSE, MICRO2, 25A	1052263-25-A	1	Order in quantities of 5; minimum order: 5.
*	FUSE,MICRO2,30A	Unrestricted	FUSE, MICRO2, 30A	1052263-30-A	1	Order in quantities of 5; minimum order: 5.
*	FUSE,MICRO3,5A	Unrestricted	FUSE, MICRO3, 5A	1052264-05-A	1	
*	FUSE,MICRO3,10A	Unrestricted	FUSE, MICRO3, 10A	1052264-10-A	1	
*	FUSE,MICRO3,15A	Unrestricted	FUSE, MICRO3, 15A	1052264-15-A	1	
*	FUSE,MEGA,250A,32V	Unrestricted	FUSE, MEGA, 32VOLT, 250AMP	1062191-00-A	1	
*	FUSE,MIDI,80A,32V	Unrestricted	FUSE, MIDI, 32VOLT, 80AMP	1062192-00-A	1	
*	FUSE,MIDI,125A,32V	Unrestricted	FUSE, MIDI, 32VOLT, 125AMP	1062193-00-A	1	
*	FUSE,MIDI,200A,32V	Unrestricted	FUSE, MIDI, 32VOLT, 200AMP	1062194-00-A	1	
*	FUSE,JCASE,STD,20A	Unrestricted	FUSE, STD, 20A	1062196-20-A	1	Order in quantities of 10; minimum order: 10.
*	FUSE,JCASE,STD,25A	Unrestricted	FUSE, STD, 25A	1062196-25-A	1	Order in quantities of 10; minimum order: 10.
*	FUSE,JCASE,STD,30A	Unrestricted	FUSE, STD, 30A	1062196-30-A	1	Order in quantities of 10; minimum order: 10.
*	FUSE,JCASE,STD,40A	Unrestricted	FUSE, STD, 40A	1062196-40-A	1	Order in quantities of 10; minimum order: 10.
*	FUSE,JCASE,STD,50A	Unrestricted	FUSE, STD, 50A	1062196-50-A	1	Order in quantities of 10; minimum order: 10.
*	FUSE,JCASE,STD,60A	Unrestricted	FUSE, STD, 60A	1062196-60-A	1	Order in quantities of 10; minimum order: 10.
*	FUSE,BF1,60A,32V, 2xM6	Unrestricted	FUSE,BF1,60A,32V, 2xM6	1071379-60-A	1	
*	FUSE,BF1,80A,32V, 2xM6	Unrestricted	FUSE,BF1,80A,32V, 2xM6	1071379-80-A	1	
*	FUSE,BF1,125A,32V, 2xM6	Unrestricted	FUSE,BF1,125A,32V, 2xM6	1071379-12-A	1	

ACCELERATOR PEDAL

Accelerator Pedal

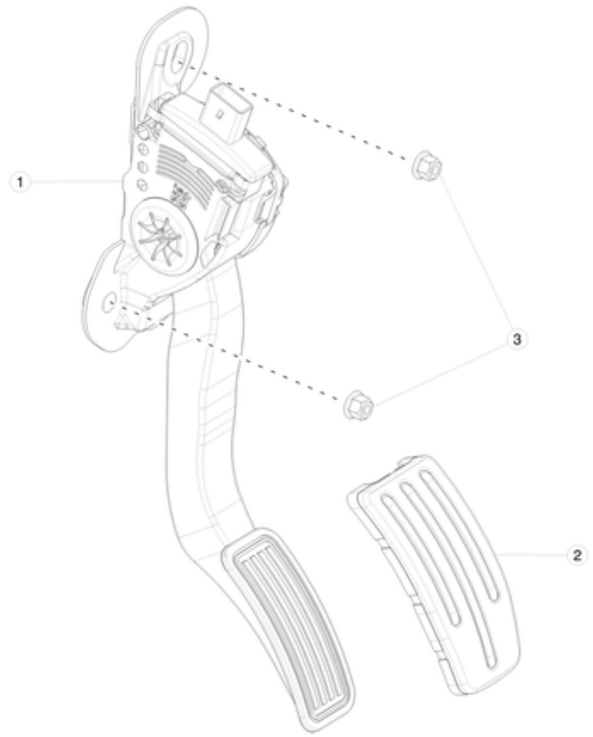

No	Part Name	Category	Part Description	Part Number	Qty	Comments
1	PEDAL, TORQUE CONTROL (ACCELERATOR)	Unrestricted	PEDAL, TORQUE CONTROL (ACCELERATOR)	1005307-00-A	1	
2	ACCELERATOR PEDAL PAD	Unrestricted	ACCELERATOR PEDAL PAD	1050664-00-A	1	
3	NUT,FLG,HEX,M6x1.00[8]-14	Unrestricted	NUT,FLG,HEX,M6x1.00[8]-14	1004378-00-B	2	

ELECTRONIC CONTROL MODULES

Body Controllers

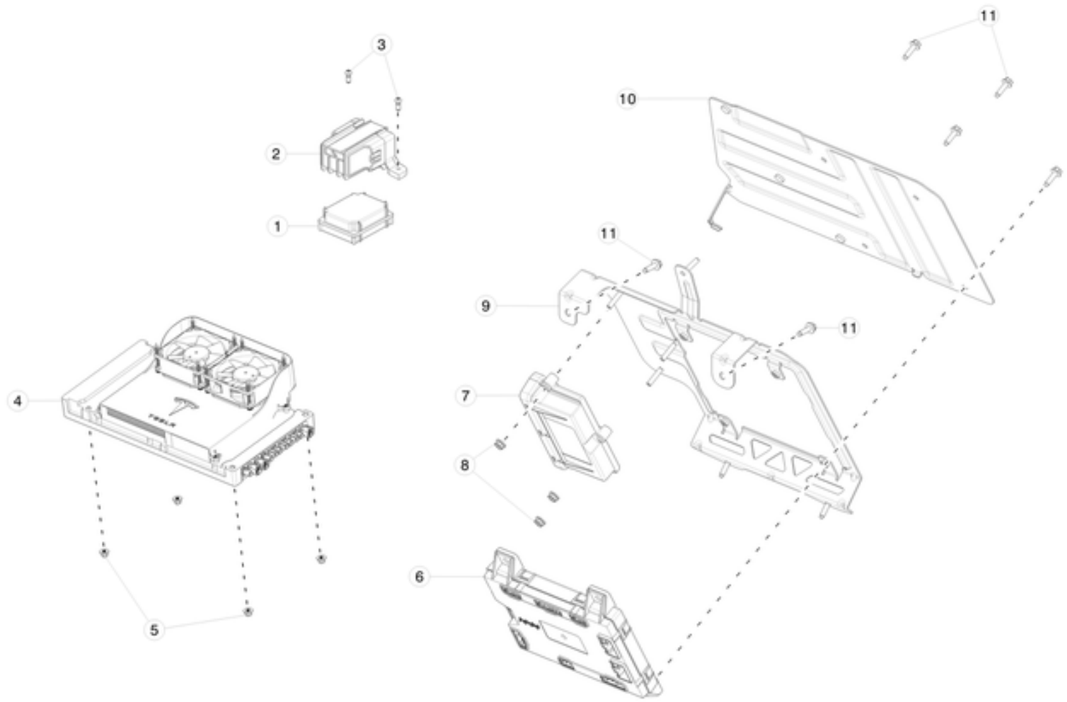

No	Part Name	Category	Part Description	Part Number	Qty	Comments
1	MODULE - HOMELINK	Unrestricted	HOMELINK MODULE	1005371-00-B	1	For vehicles produced before April 21st, 2017.
1	MODULE, HOMELINK V	Unrestricted	MODULE, HOMELINK V	1097814-00-A	1	For vehicles produced on and after April 21st, 2017.
2	BRACKET - MODULE - HOMELINK	Unrestricted	HOMELINK MODULE BRACKET	1056951-00-C	1	For vehicles produced before April 21st, 2017.
2	BRACKET - MODULE - HOMELINK V	Unrestricted	HOMELINK V MODULE BRACKET	1092730-00-A	1	For vehicles produced on and after April 21st, 2017.
3	SCR,M5x0.8x14,BH,T25,ZnNi,PTCH	Unrestricted	SCR,M5x0.8x14,BH,T25,ZnNi,PTCH	1021188-00-A	2	
4	Autopilot 2.0 ECU	Unrestricted	Autopilot 2.0 ECU	1078321-70-H	1	For vehicles produced between October 12th, 2016 and August 21st, 2017. 1078321-70-H and 1078321-70-G are fully interchangeable. Only use 1078321-70-G or newer to replace older versions.
4	Autopilot 2.5 ECU	Unrestricted	Autopilot 2.5 ECU	1125800-70-B	1	For vehicles produced on and after August 21st, 2017.
5	NUT,HEX-FLNG,M5X.8,STL,ZNC,NYLOCK	Unrestricted	NUT,HEX-FLNG,M5X.8,STL,ZNC,NYLOCK	1012845-00-A	4	For vehicles produced on and after October 12th, 2016. With option code: APH2
6	BODY CONTROLLER - MODEL S 315 MHz	Unrestricted	MODEL S BODY CONTROLLER - 315 MHz	1010906-00-G	1	
7	SUNROOF CONTROLLER - MODEL S	Unrestricted	MODEL S SUNROOF CONTROLLER	1007512-00-B	1	Notinterchangeable with 1007512-00-C. Use with harnesses 1004423-91-R / 1004423-01-S
7	SUNROOF CONTROLLER - MODEL S	Unrestricted	MODEL S SUNROOF CONTROLLER	1007512-00-C	1	Not interchangeable with 1007512-00-B. Use with X into S seats and harnesses 1004423-90-R / 1004423-00-S.
8	NUT HF M6-1.00[8]ZnAl	Unrestricted	NUT M6-1.00 ZINC ALUMINUM	2007207	3	Order in quantities of 25; minimum order: 25.
9	MOUNT - ELECTRONICS - FOOTWELL	Unrestricted	FOOTWELL BODY CONTROLLER BRACKET	1013496-00-F	1	
10	COVER - ELECTRONICS - FOOTWELL	Unrestricted	FOOTWELL BRACKET COVER	1013499-00-F	1	
11	BLT HF M6-1.00x20[8.8]ZnAlW	Unrestricted	BOLT M6-1.00x20 ZINC ALUMINUM	1009420-00-A	10	

*	61 ROUND CABLE CORE ASSM - FERRITE LARGE	Unrestricted	FERRITE LARGE - 61 ROUND CABLE CORE ASSEMBLY	1038709-00-A	1	
*	STD CABLE TIE - 5.8IN	Unrestricted	STANDARD CABLE TIE - 5.8IN	1039480-00-A	1	Order in quantities of 100; minimum order: 100.
*	TESA ELECTRICAL TAPE	Unrestricted	TESA ELECTRICAL TAPE	1038765-00-A	A/N	

EXTERIOR LIGHTS

Front Lights (Excluding Headlamps)

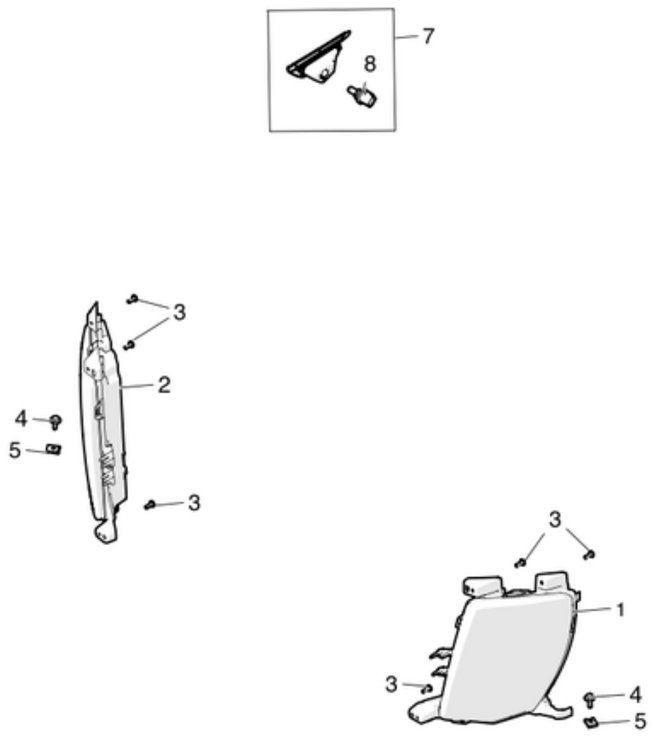

No	Part Name	Category	Part Description	Part Number	Qty	Comments
1	LAMP ASY - FRT FOG/SD Reflex - SAE (LH)	Unrestricted	FRONT FOG AND CORNERING LAMP ASSEMBLY - SAE - LEFT	6005913-00-G	1	Use only G or newer for S.Korea, F or newer for other countries
1	LAMP ASY - FRT CORNERING - SAE (LH)	Unrestricted	FRONT CORNERING LAMP ASSEMBLY - SAE - LEFT	1024016-00-C	1	W/O fog and w/ cornering light.
1	LAMP ASY FRT SD/Reflex SAE NO FOG, NO LIGHT PIPE(LH)	Unrestricted	FRONT LAMP ASSEMBLY - SAE - LEFT	1005995-00-E	1	W/O fog and cornering light, Use only 00-E or newer for S.Korea,00-D or newer for other countries
1	LAMP ASY - FRT PARK SAE W/ LIGHT PIPE, NO FOG(LH)	Unrestricted	FRONT LAMP ASSEMBLY WITH LIGHT PIPE - SAE - LEFT	1028382-00-B	1	W/O fog and cornering light.
2	LAMP ASY - FRT FOG/SD Reflex - SAE (RH)	Unrestricted	FRONT FOG AND CORNERING LAMP ASSEMBLY - SAE - RIGHT	6005914-00-G	1	Use only G or newer for S.Korea, F or newer for other countries, W/ fog and cornering light.
2	LAMP ASY - FRT CORNERING SAE (RH)	Unrestricted	FRONT CORNERING LAMP ASSEMBLY - SAE - RIGHT	1024017-00-C	1	W/O fog and w/ cornering light.
2	LAMP ASY FRT SD/Reflex SAE NO FOG, NO LIGHT PIPE (RH)	Unrestricted	FRONT LAMP ASSEMBLY - SAE - RIGHT	1005996-00-E	1	W/O fog and cornering light, Use only 00-E or newer for S.Korea,00-D or newer for other countries
2	LAMP ASY - FRT PARK SAE W/LIGHT PIPE, NO FOG(RH)	Unrestricted	FRONT LAMP ASSEMBLY WITH LIGHT PIPE - SAE - RIGHT	1028383-00-B	1	W/O fog and cornering light.
3	Screw - ST Washer M5 x 14 ZnAl (BN20040)	Unrestricted	PAN HEAD TORX SCREW, M5-1.8X14	1006533-00-A	6	
4	SCR HEX HEAD M6X20 ZnAl	Unrestricted	SCREW HEX HEAD M6X20 ZINC ALUMINUM	1010261-00-A	1	Order in quantities of 50; minimum order: 50.
5	U-nut M 6x0.6-3.5	Unrestricted	U-NUT M6x0.6-3.5	1006518-00-A	2	Order in quantities of 50; minimum order: 50.
6	LAMP ASY SIDE REPEATER (LH)	Unrestricted	SIDE REPEATER LAMP ASSEMBLY - LEFT	6007707-00-C	1	
6	LAMP ASY SIDE REPEATER (LH), AUTOPILOT	Unrestricted	SIDE REPEATER LAMP ASSEMBLY - LEFT, AUTOPILOT	1034344-20-B	1	For vehicles manufactured between October 12th, 2016 and August 21st, 2017 with Option codes APH0, APH2. For S. Korea use only 20-B or newer, for other countries ok to use 01-B or newer

6	LAMP ASY SIDE REPEATER (LH), AUTOPILOT	Unrestricted	SIDE REPEATER LAMP ASSEMBLY - LEFT, AUTOPILOT	1125106-00-B	1	For vehicles manufactured on or after August 21st, 2017 with Option code: APH3. Both LH and RH side must be the same pedigree
7	LAMP ASY SIDE REPEATER (RH)	Unrestricted	SIDE REPEATER LAMP ASSEMBLY - RIGHT	6007699-00-C	1	
7	LAMP ASY SIDE REPEATER (RH), AUTOPILOT	Unrestricted	SIDE REPEATER LAMP ASSEMBLY - RIGHT, AUTOPILOT	1034345-20-B	1	For vehicles manufactured between October 12th, 2016 and August 21st, 2017 with Option codes APH0, APH2.For S.Korea use only 20-B or newer, for other countries ok to use 01-B or newer
7	LAMP ASY SIDE REPEATER (RH), AUTOPILOT	Unrestricted	SIDE REPEATER LAMP ASSEMBLY - RIGHT, AUTOPILOT	1125107-00-B	1	For vehicles manufactured on or after August 21st, 2017 with Option code: APH3. Both LH and RH side must be the same pedigree
8	BULB SIDE REPEATER WY10W	Unrestricted	SIDE REPEATER BULB - WY10W	1029173-00-A	2	Order in quantities of 10; minimum order: 10.

Headlamps

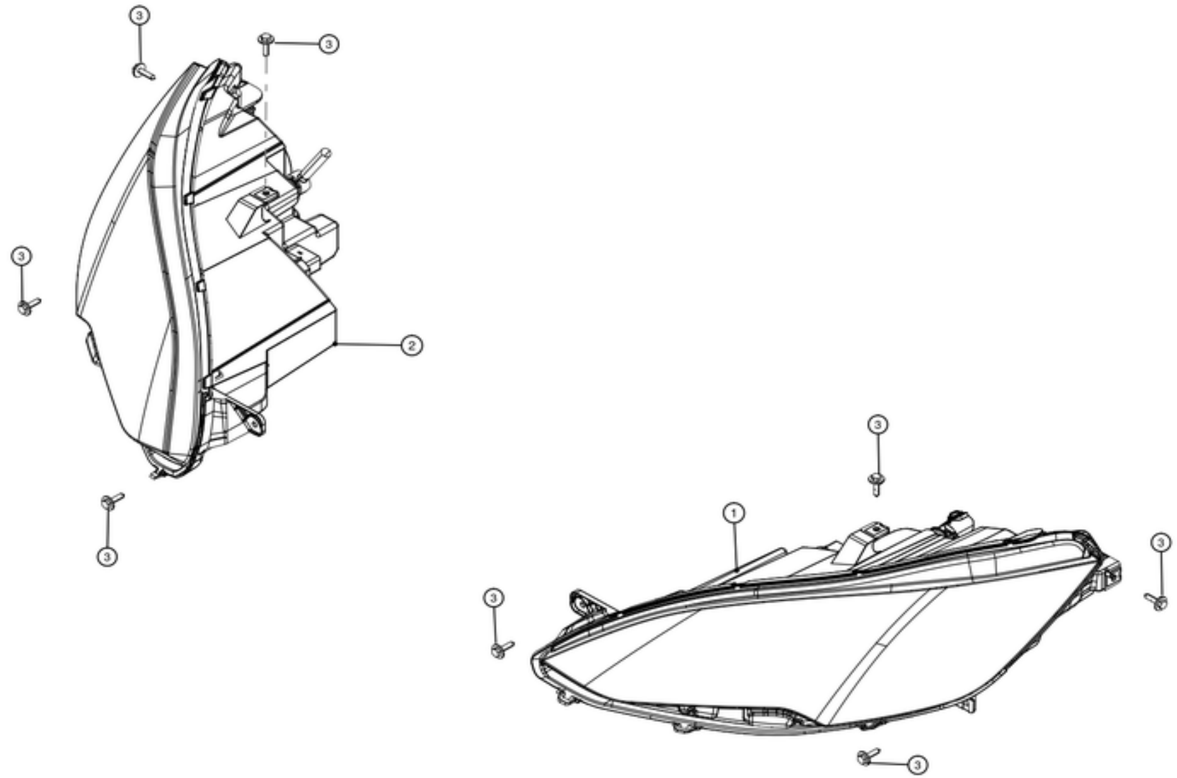

No	Part Name	Category	Part Description	Part Number	Qty	Comments
1	HD/LP ASY, NA LHD BASE, LH	Unrestricted	HEADLAMP ASSEMBLY - BASE - LEFT - LEFT HAND DRIVE	1065041-00-D	1	Use only D or newer for S.Korea, B or newer for other countries.OK to replace -A if changed in pairs.For vehicles with option codes: RENA AND X008
1	HD/LP ASY, SAE UP-LEVEL, LH	Unrestricted	HEADLAMP ASSEMBLY - UP-LEVEL - LEFT - NORTH AMERICA	1053570-00-D	1	For vehicles with option codes: RENA AND X007, Use only D or newer for S.Korea, B or newer for other countries. OK to use -A if swapped in pairs (LH/RH side must match)
2	HD/LP ASY, SAE BASE, RH	Unrestricted	HEADLAMP ASSEMBLY - BASE - RIGHT - NORTH AMERICA	1065042-00-D	1	Use only D or newer for S.Korea, B or newer for other countries. For vehicles with option codes: RENA AND X008
2	HD/LP ASY, SAE UP-LEVEL, RH	Unrestricted	HEADLAMP ASSEMBLY - UP-LEVEL - RIGHT - NORTH AMERICA	1053571-00-D	1	Use only -D or newer for S.Korea,-B or newer for other countries. OK to use -A if swapped in pairs (LH/RH side must match). For vehicles with option codes: RENA AND X007
3	BLT HEX WSHR M6-1.00x25 ZINC ALUMINUM	Unrestricted	BOLT HEX WASHER M6-1.00x25 ZINC ALUMINUM	1006551-00-B	8	

Tail Lights

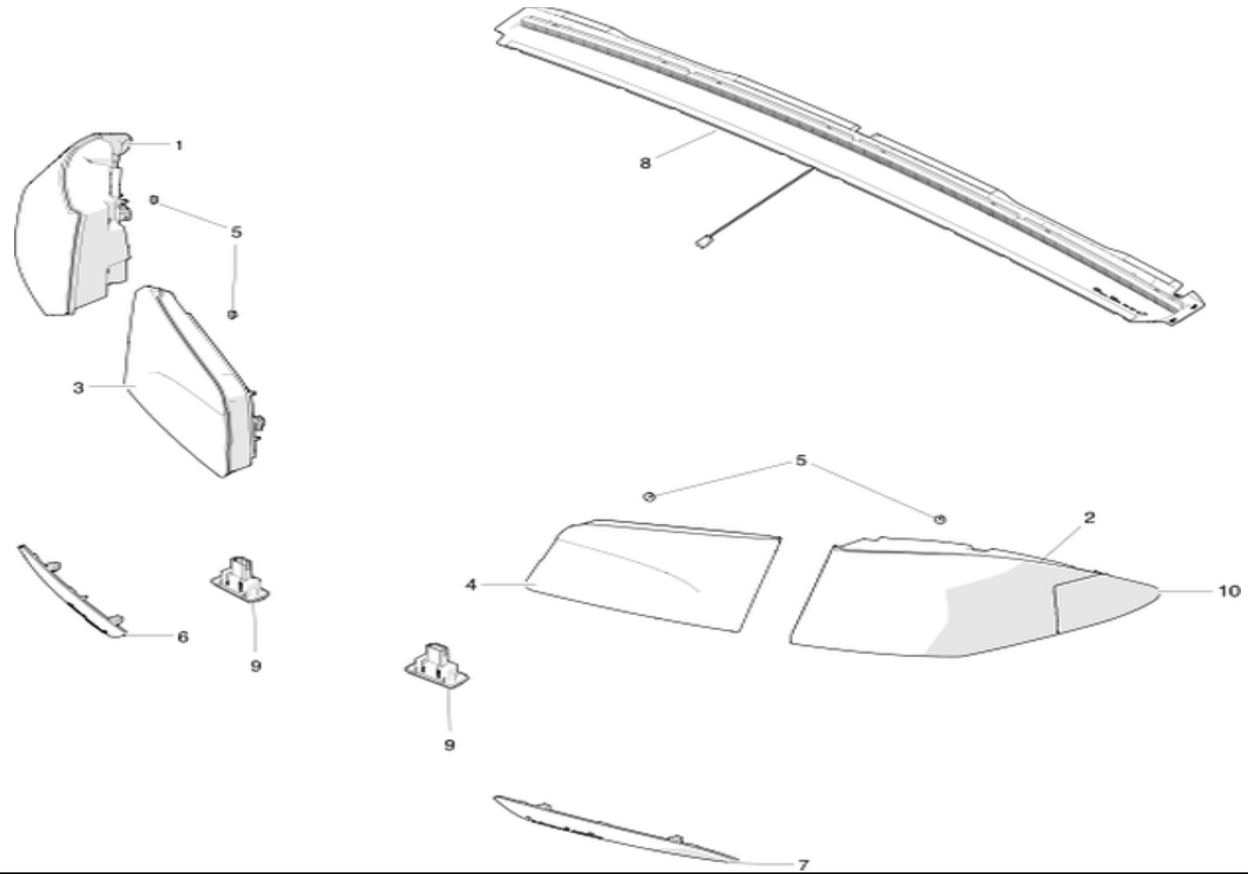

No	Part Name	Category	Part Description	Part Number	Qty	Comments
1	LAMP ASY - STOP/TAIL/TURN - SAE (LH)	Unrestricted	REAR LAMP ASSEMBLY - STOP/TAIL/TURN - SAE - LEFT	6005918-00-F	1	Use only F or newer for S.Korea, E or newer for other countries
*	GASKET MAIN - BODY SIDE TAIL LAMP	Unrestricted	BODY SIDE TAIL LAMP MAIN GASKET	1029071-00-B	1	
*	GASKET STUD - BODY SIDE TAIL LAMP	Unrestricted	BODY SIDE TAIL LAMP STUD GASKET	1029072-00-B	3	
2	LAMP ASY - STOP/TAIL/TURN - SAE (RH)	Unrestricted	REAR LAMP ASSEMBLY - STOP/TAIL/TURN - SAE - RIGHT	6005919-00-F	1	Use only F or newer for S.Korea, E or newer for other countries
*	GASKET MAIN - BODY SIDE TAIL LAMP	Unrestricted	BODY SIDE TAIL LAMP MAIN GASKET	1029071-00-B	1	
*	GASKET STUD - BODY SIDE TAIL LAMP	Unrestricted	BODY SIDE TAIL LAMP STUD GASKET	1029072-00-B	3	
*	SCR, TORX WSHR HD W/POINT R, 40x16mm	Unrestricted	SCREW, M6-1x16, TRUSSHEAD, STEEL, ZINC NICKEL WITH PATCH	1012740-00-A	6	Use to install fixed door
*	BONDED WASHER - FIXED DOOR HOUSING	Unrestricted	FIXED DOOR HOUSING BONDED WASHER	1018302-00-A	1	Use to install fixed door. Order in quantities of 10; minimum order: 10.
3	LAMP ASY - L/Gate TAIL B/U - SAE (LH)	Unrestricted	LIFTGATE TAIL LAMP ASSEMBLY - BACKUP - SAE - LEFT	6005922-00-E	1	Use only E or newer for S.Korea, D or newer for other countries
*	GASKET - LIFT GATE TAIL LAMP (LH)	Unrestricted	LIFT GATE TAIL LAMP GASKET - LEFT	1029069-00-B	1	
*	CAP,FLG,6.8 ID,9.0 OD[EPDM+PP]	Unrestricted	FLANGE CAP, 6.8MM INNER DIAMETER AND9.0MMOUTER DIAMETER	1018585-00-A	2	Use on item #3 and 4 to cover nuts. Order in quantities of 50; minimum order: 50.
4	LAMP ASY - L/Gate TAIL B/U - SAE (RH)	Unrestricted	LIFTGATE TAIL LAMP ASSEMBLY - BACKUP - SAE - RIGHT	6005924-00-E	1	Use only E or newer for S.Korea, D or newer for other countries
4	LP ASY - L/GATE TAIL B/U RR FOG RHD (RH)	Unrestricted	LIFTGATE TAIL LAMP ASSEMBLY - BACKUP REAR FOG - RIGHT - RIGHT HAND DRIVE	1006006-00-C	1	
*	GASKET - LIFT GATE TAIL LAMP (RH)	Unrestricted	LIFT GATE TAIL LAMP GASKET - RIGHT	1029070-00-B	1	
*	CAP,FLG,6.8 ID,9.0 OD[EPDM+PP]	Unrestricted	FLANGE CAP, 6.8MM INNER DIAMETER AND 9.0MM OUTER DIAMETER	1018585-00-A	2	Use on item #3 and 4 to cover nuts. Order in quantities of 50; minimum order: 50.

5	NUT HF M5-0.80[8]ZnAlW	Unrestricted	NUT HF M5-0.80[8]ZnAlW	2007183	15	
6	LAMP ASY RR REFLEX (LH)	Unrestricted	LAMP ASSEMBLY REAR REFLEX - LEFT	6007705-00-D	1	Use only D or newer for S.Korea, C or newer for other countries
7	LAMP ASY RR REFLEX (RH)	Unrestricted	LAMP ASSEMBLY REAR REFLEX - RIGHT	6007706-00-D	1	Use only D or newer for S.Korea, C or newer for other countries
8	LAMP ASY - CHMSL	Unrestricted	CENTER HIGH MOUNTED STOP LIGHT ASSEMBLY	6005917-00-F	1	Use only F or newer for S.Korea, E or newer for other countries
9	LAMP ASY, REAR LICENSE PLATE, ALL	Unrestricted	REAR LICENSE PLATE LAMP ASSEMBLY - ALL REGIONS	1034341-00-B	2	Use only B or newer for S.Korea, A or newer for other countries
10	ASY FIXED DOOR RH	Unrestricted	FIXED DOOR ASSEMBLY - RIGHT	1022421-00-C	1	

FRONT CAMERA

Forward Facing Camera

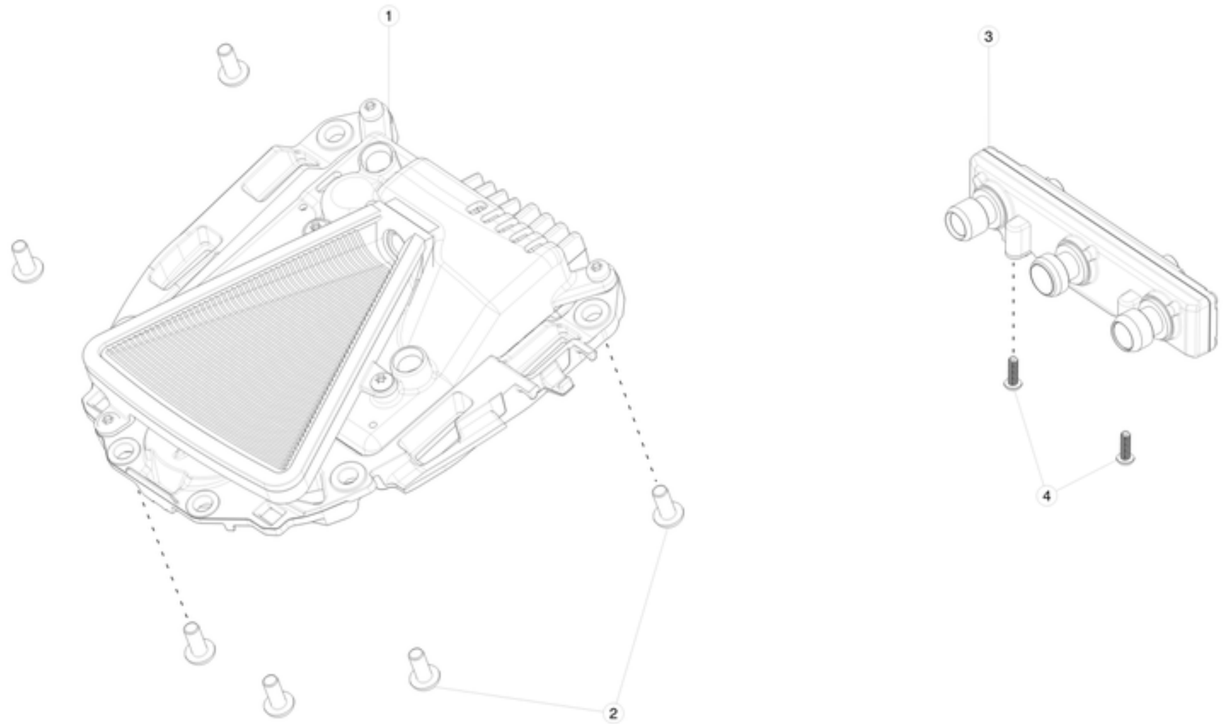

No	Part Name	Category	Part Description	Part Number	Qty	Comments
1	MONOCAM	Unrestricted	MONOCAM	1038482-00-J	1	Vehicles produced between March and October 12th, 2016 can use 1038482-00-H and newer pedigrees or any pedigree of 1038482-99 and 1038482-90. With option codes: DA01, DA02
2	SCREW TORX M5 x 12 TRUSS HEAD (T25)	Unrestricted	SCREW TORX M5 x 12 TRUSS HEAD (T25)	1011784-00-A	6	
1	INLINE TRIPLE CAMERA	Unrestricted	INLINE TRIPLE CAMERA	1089531-00-C	1	For vehicles produced between October 18th, 2016 and August 21st, 2017.
1	INLINE TRIPLE CAMERA	Unrestricted	INLINE TRIPLE CAMERA	1120520-99-B	1	For vehicles produced on and after August 21st, 2017. 1120520-00-B and 1120520-99-B are fully interchangeable
4	M3 x 0.5 x 10mm Machine Screw	Unrestricted	M3 x 0.5 x 10mm Machine Screw	1011417-00-B	2	Use with 1089531-00-C

HARNESSES

Cabin Harness

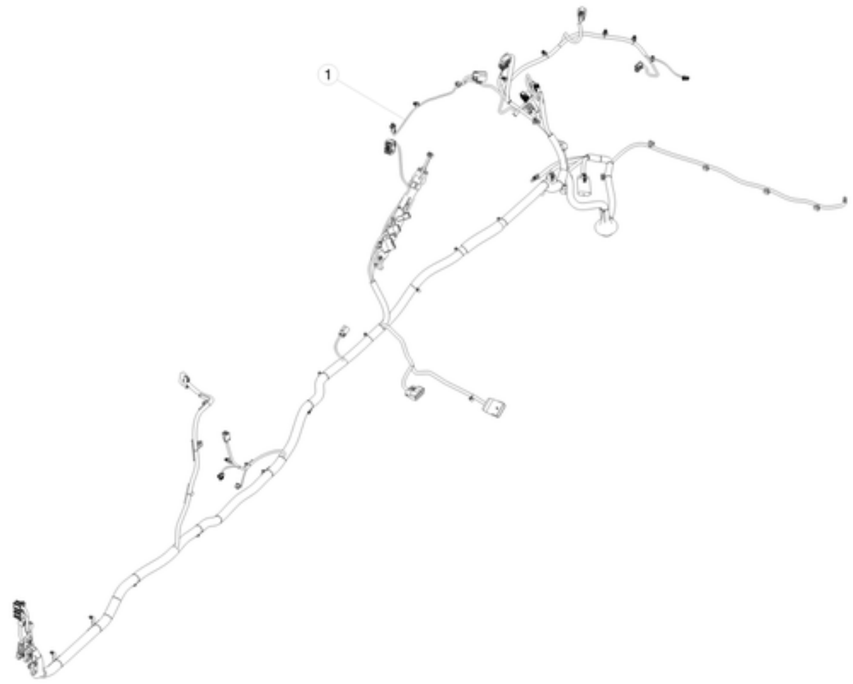

No	Part Name	Category	Part Description	Part Number	Qty	Comments
1	ASY,HRN,MDLS,ALL,BODY RT, AIR	Unrestricted	RIGHT BODY HARNESS ASSEMBLY - AIR SUSPENSION	1004417-00-Q	1	For vehicles built since start of production until October 12th, 2016. With option codes: MI01 AND SU01 AND DA01; MI01 AND SU01 AND DA02.
1	ASY,HRN,MDLS,ALL,BODY RT,AIR,DA03	Unrestricted	RIGHT BODY HARNESS ASSEMBLY - AIR SUSPENSION	1004417-00-T	1	For vehicles produced between October 12th, 2016 and August 21st, 2017. With option codes: SU01 AND APH0, SU01 AND APH2
1	ASY,HRN,MDLS,BODY RT,AP2.5,AIR	Unrestricted	RIGHT BODY HARNESS ASSEMBLY - AIR SUSPENSION - AUTOPILOT 2.5	2004417-00-A	1	For vehicles produced on and after August 21st, 2017. With option codes: SU01 AND APH3
1	ASY,HRN,MDLS,ALL,BODY RT, COIL	Unrestricted	RIGHT BODY HARNESS ASSEMBLY - COIL SUSPENSION	1004417-01-Q	1	For vehicles built since start of production until October 12th, 2016. With option codes: MI01 AND SU00 AND DA01; MI01 AND SU00 AND DA02.
1	ASY,HRN,MDLS,ALL,BODY RT, COIL, DA03	Unrestricted	RIGHT BODY HARNESS ASSEMBLY - COIL SUSPENSION	1004417-01-T	1	or vehicles produced between October 12th, 2016 and August 21st, 2017. With option codes: SU00 AND APH0, SU00 AND APH2.
1	ASY,HRN,MDLS,BODY RT,AP2.5,COIL	Unrestricted	RIGHT BODY HARNESS ASSEMBLY - COIL SUSPENSION - AUTOPILOT 2.5	2004417-01-A	1	or vehicles produced on and after August 21st, 2017. With option codes: SU00 AND APH3.

Dash and Console Harnesses



No	Part Name	Category	Part Description	Part Number	Qty	Comments
1	ASY,HRN,MDLS,LHD,IP,PREM AUD	Unrestricted	INSTRUMENT PANEL HARNESS ASSEMBLY - PREMIUM AUDIO	1004422-01-Q	1	For vehicles produced until July 26th, 2016. With option codes: DRLH AND AU01 AND DA02; DRLH AND AU01 AND DA01.
1	ASY,HRN,MDLS,LHD,IP,PREM AUD	Unrestricted	INSTRUMENT PANEL HARNESS ASSEMBLY - PREMIUM AUDIO	1004422-01-R	1	For vehicles produced between July 26th and October 12th, 201. With option codes: DRLH AND AU01 AND DA02; DRLH AND AU01 AND DA01.
1	ASY,HRN,MDLS,LHD,IP,PREM AUD	Unrestricted	INSTRUMENT PANEL HARNESS ASSEMBLY - PREMIUM AUDIO	1004422-03-T	1	For vehicles produced between October 12th, 2016 and August 21st, 2017. 1004422-03-T and 1004422-93-T are fully interchangeable
1	ASY,HRN,MDLS,LHD,IP,AP2.5,PREM AUD	Unrestricted	INSTRUMENT PANEL HARNESS ASSEMBLY - PREMIUM AUDIO - AUTOPILOT 2.5 - INFOTAINMENT 1.0	3004422-00-A	1	For vehicles produced on and after August 21st, 2017. 3004422-00-A, 2004422-00-A and 2004422-90-A are fully interchangeable
1	ASY,HRN,MDLS,LHD,IP,BASE AUD	Unrestricted	INSTRUMENT PANEL HARNESS ASSEMBLY - BASE AUDIO	1004422-02-Q	1	For vehicles produced until August 1st, 2016. With option codes: DRLH AND AU00 AND DA01; DRLH AND AU00 AND DA02.
1	ASY,HRN,MDLS,LHD,IP,BASE AUD	Unrestricted	INSTRUMENT PANEL HARNESS ASSEMBLY - BASE AUDIO	1004422-02-R	1	For vehicles produced between August 1st and October 12th, 2016. With option codes: DRLH AND AU00 AND DA01; DRLH AND AU00 AND DA02.
1	ASY,HRN,MDLS,LHD,IP,BASE AUD	Unrestricted	INSTRUMENT PANEL HARNESS ASSEMBLY - BASE AUDIO	1004422-04-T	1	For vehicles produced between October 12th, 2016 and August 21st, 2017. 1004422-04-Tand 1004422-94-T are fully interchangeable
1	ASY,HRN,MDLS,LHD,IP,AP2.5,BASE AUD	Unrestricted	INSTRUMENT PANEL HARNESS ASSEMBLY - BASE AUDIO - AUTOPILOT 2.5	3004422-01-A	1	For vehicles produced on and after August 21st, 2017. 3004422-01-A, 2004422-01-A and 2004422-91-A are fully interchangeable
2	ASY - HARNESS - CENTER CONSOLE, MDLS	Unrestricted	CENTER CONSOLE HARNESS ASSEMBLY	1032431-02-E	1	
3	CBL,USB,FRONT OUTLETS	Unrestricted	FRONT OUTLET USB CABLE	1004815-07-D	2	
*	ASY,PIGTAIL,MDLS,IP TUNER,EU/AP	Unrestricted	ASY,PIGTAIL,MDLS,IP TUNER,EU/AP	1071451-01-A	1	

Doors and Liftgate Harnesses



No	Part Name	Category	Part Description	Part Number	Qty	Comments
1	ASY,HRN,MDLS,ALL,DOOR FR LT	Unrestricted	FRONT DOOR HARNESS ASSEMBLY WITH GROMMET - LEFT - ALL OPTIONS	1004419-00-U	1	1004419-00-U can replace 1004419-00-P.For all vehicle options built since start of production until July 24th, 2017.
1	ASY,HRN,MDLS,ALL,DOOR FR LT,DHG3	Unrestricted	ASY,HRN,MDLS,ALL,DOOR FR LT -DOOR HANDLE GEN 3	1004419-01-U	1	For all vehicle options built since July 24th, 2017. Can replace 1004419-91-U.
2	ASY,HRN,MDLS,ALL,DOOR FR RT	Unrestricted	FRONT DOOR HARNESS ASSEMBLY WITH GROMMET - RIGHT - ALL OPTIONS	1004424-00-U	1	1004424-00-U can replace 1004424-00-P. For all vehicle options built since May 7, 2016 until July 24th, 2017..
2	ASY,HRN,MDLS,ALL,DOOR FR RT	Unrestricted	FRONT DOOR HARNESS ASSEMBLY WITH GROMMET - RIGHT - ALL OPTIONS	1004424-01-U	1	For all vehicle options built since July 24th, 2017. Can replace 1004424-91-U
3	ASY,HRN,MDLS,ALL,DOOR RR LT	Unrestricted	REAR DOOR HARNESS ASSEMBLY WITH GROMMET - LEFT	1004425-00-Q	1	OK to use on all refresh vehicles built since April 11, 2016. OK to replace 1004425-00-P.
4	ASY,HRN,MDLS,ALL,DOOR RR RT	Unrestricted	REAR DOOR HARNESS ASSEMBLY WITH GROMMET - RIGHT	1004426-00-Q	1	OK to use on all refresh vehicles built since start of production. OK to replace 1004426-00-P.
*	EDGE CLIP CABLE TIE	Unrestricted	CABLE TIE EDGE CLIP	1015212-00-A	**	Use on items #3 and #4 as needed. Order in quantities of 50; minimum order: 50.
5	ASY,HRN,MDLS,ALL,LIFTGATE LT,TECH	Unrestricted	LIFTGATE HARNESS ASSEMBLY - LEFT - TECH PACKAGE	1004429-90-P	1	For vehicles built since start of production with option codes:AU01 AND RENA AND RFBC;AU01 AND RENA AND RFBK;RENA AND AU00;REAP; REEU.
5	ASY,HRN,MDLS,ALL,LIFTGATE LT,BASE + XM	Unrestricted	LIFTGATE HARNESS ASSEMBLY - LEFT - BASE WITH XM	1004429-92-P	1	For vehicles built since start of production with option codes:AU01 AND RENA AND RFP2.
6	LIFTGATE HARNESS ASSEMBLY WITH GROMMET - RIGHT - TECH PACKAGE	Unrestricted	LIFTGATE HARNESS ASSEMBLY WITH GROMMET - RIGHT	1004428-90-P	1	For vehicles built since start of production with option code X001.
6	ASY,HRN,MDLS,ALL,LIFTGATE RT,BASE	Unrestricted	LIFTGATE HARNESS ASSEMBLY WITH GROMMET - RIGHT - BASE PACKAGE	1004428-91-P	1	For vehicles built since start of production with option code X002.

Front End and Front Bumper Harness

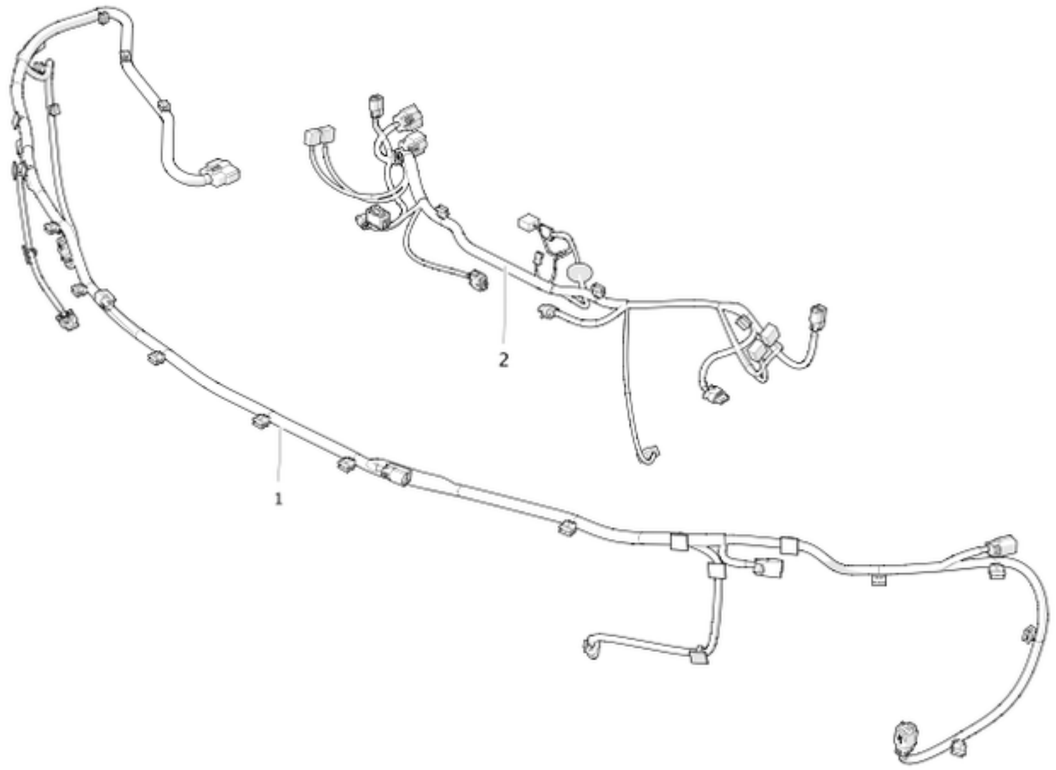

No	Part Name	Category	Part Description	Part Number	Qty	Comments
1	ASY,HRN,MDLS,ALL,BUMP FR	Unrestricted	FRONT BUMPER HARNESS ASSEMBLY	1004420-04-R	1	For vehicles produced until October 12th. With option codes: DA01; DA02.
1	ASY,HRN,MDLS,ALL,BUMP FR,DA01	Unrestricted	FRONT BUMPER HARNESS ASSEMBLY	1004420-04-T	1	For vehicles produced on or after October 12th, 2016. With option codes: APH0, APH2
2	ASY,HRN,MDLS,ALL,COMP FEM	Unrestricted	COMPOSITE FRONT END MODULE HARNESS	1035338-00-S	1	For all vehicles built since Model S update until April 21st, 2017. OK to use 1035338-07-R, and -97-R.
2	ASY,HRN,MDLS,ALL,FEM,HMLK	Unrestricted	ASY,HRN,MDLS,ALL,FEM,HMLK	1035338-00-T	1	For all vehicles built since Model S update until August 21st, 2017. OK to use 1035338-07-R, and -97-R.
2	ASY,HRN,MDLS,FEM,AP2.5,HMLK	Unrestricted	ASY,HRN,MDLS,FEM,AP2.5,HMLK	2035338-00-A	1	For vehicles built on and after August 21st, 2017.
2	ASY,HRN,MDLS,FEM,AP2.5,NO HK +PSPK	Unrestricted	ASY,HRN,MDLS,FEM,AP2.5,NO HK+PSPK	2035338-03-A	1	For vehicles produced on and after August 21st, 2017. Option code X012 and APH3

Main (Lower Dash) and Motor Bay Harnesses

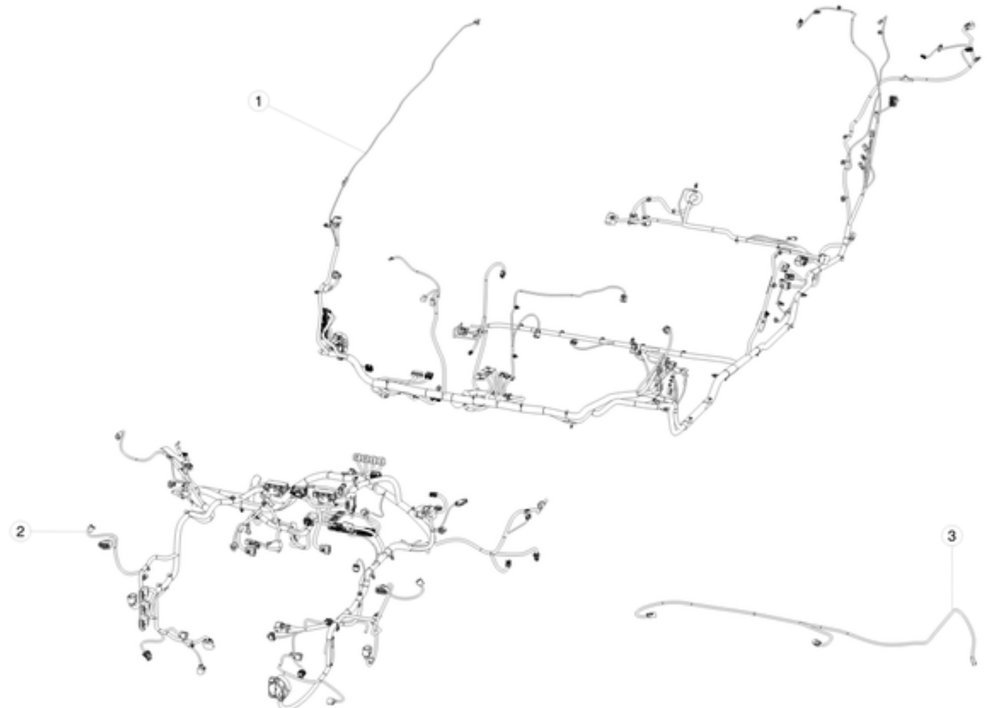

No	Part Name	Category	Part Description	Part Number	Qty	Comments
1	ASY,HRN,MDLS,LHD,DASH LWR,SST	Unrestricted	LOWER DASH BODY HARNESS ASSEMBLY - LEFT HAND DRIVE	1004423-91-R	1	Use with sunroof controller 1007512-00-B and Next Gen.
1	ASY,HRN,MDLS,LHD,DASH LWR,SST	Unrestricted	LOWER DASH BODY HARNESS ASSEMBLY - LEFT HAND DRIVE	1004423-91-S	1	Use with sunroof controller 1007512-00-B and Next Gen.
1	ASY,HRN,MDLS,LHD,DASH LWR,XST	Unrestricted	LOWER DASH BODY HARNESS ASSEMBLY - LEFT HAND DRIVE	1004423-90-R	1	Use with sunroof controller 1007512-00-C and X into S seats.
1	ASY,HRN,MDLS,LHD,DASH LWR,XST,DA03	Unrestricted	LOWER DASH BODY HARNESS ASSEMBLY - LEFT HAND DRIVE	1004423-00-S	1	For vehicles produced between October 12th, 2016 and August 21st, 2017. 1004423-90-S, 1004423-80-S and 1004423-00-S are fully interchangeable. Use with sunroof controller 1007512-00-C and X into S seats.
1	ASY,HRN,MDLS,LHD,DASH LWR,AP2.5,EUNACP	Unrestricted	LOWER DASH BODY HARNESS ASSEMBLY - LEFT HAND DRIVE	2004423-00-A	1	For vehicles produced on and after August 21st, 2017.
*	Cable, RF, Body Main, RKE	Unrestricted	RF BODY MAIN CABLE - REMOTE KEYLESS ENTRY	1006763-00-C	1	Service only - Use in 1004423-XX-X
*	ASY,HARN,FIRST RESPONDER CUT LOOP	Unrestricted	ASY,HARN,FIRST RESPONDER CUT LOOP	1104866-00-A	1	
*	CBL TIE,EDGE,45-1MM,PT1-3MM,PA66,BLK	Unrestricted	CBL TIE,EDGE,45-1MM,PT1-3MM,PA66,BLK	1015206-00-A	1	Cable tie for for first responder loop.
2	ASY,HRN,MDLS,LHD2WD,FRUNK,AIR	Unrestricted	FRONT TRUNK HARNESS ASSEMBLY - AIR SUSPENSION - RWD - LEFT HAND DRIVE	1046132-90-R	1	For vehicles built since start of production until October 12th, 2016. With option codes: DRLH AND DV2W AND SU01 AND MI01.
2	ASY,HRN,MDLS,LHD2WD,FRUNK,AIR,DA03	Unrestricted	FRONT TRUNK HARNESS ASSEMBLY - AIR SUSPENSION - RWD - LEFT HAND DRIVE	1046132-84-S	1	For vehicles produced between October 12th, 2016 and August 21st, 2017. 1046132-94-S, 1046132-04-S and 1046132-84-S are fully interchangeable.With option codes: DRLH AND DV2W AND SU01 AND APH0, DRLH AND DV2W AND SU01 AND APH2.
2	ASY,HRN,MDLS,LHD2WD,AP2.5,FRUNK,AIR	Unrestricted	FRONT TRUNK HARNESS ASSEMBLY - AIR SUSPENSION - RWD - LEFT HAND DRIVE - AUTOPILOT 2.5	2046132-80-A	1	For vehicles produced on and after August 21st, 2017.With option codes: DRLH AND DV2W AND SU01 AND APH3
2	ASY,HRN,MDLS,LHD2WD,FRUNK,COIL	Unrestricted	FRONT TRUNK HARNESS ASSEMBLY - COIL SUSPENSION - RWD - LEFT HAND DRIVE	1046132-91-R	1	For vehicles built since start of production with option codes: DRLH AND DV2W AND SU00 AND MI01.
2	ASY,HRN,MDLS,LHD2WD,FRUNK,COIL	Unrestricted	FRONT TRUNK HARNESS ASSEMBLY - COIL SUSPENSION - RWD - LEFT HAND DRIVE	1046132-05-S	1	For vehicles produced between October 12th, 2016 and August 21st, 2017. 1046132-05-S can replace 1046132-95-S
2	ASY,HRN,MDLS,LHD2WD,AP2.5,FRUNK,COIL	Unrestricted	FRONT TRUNK HARNESS ASSEMBLY - COIL SUSPENSION - RWD - LEFT HAND DRIVE - AUTOPILOT 2.5	2046132-01-A	1	For vehicles produced on and after August 21st, 2017.

2	ASY,HRN,MDLS,LHD4WD,FRUNK,AIR	Unrestricted	FRONT TRUNK HARNESS ASSEMBLY - AIR SUSPENSION - DUAL MOTOR - LEFT HAND DRIVE	1046132-92-R	1	For vehicles built since start of production until October 12th, 2016. With option codes: DRLH AND DV4W AND SU01 AND MI01.
2	ASY,HRN,MDLS,LHD4WD,FRUNK,AIR	Unrestricted	FRONT TRUNK HARNESS ASSEMBLY - AIR SUSPENSION - DUAL MOTOR - LEFT HAND DRIVE	1046132-06-S	1	For vehicles produced between October 12th, 2016 and August 21st, 2017. 1046132-06-S can replace 1046132-96-S
2	ASY,HRN,MDLS,LHD4WD,AP2.5,FRUNK,AIR	Unrestricted	FRONT TRUNK HARNESS ASSEMBLY - AIR SUSPENSION - DUAL MOTOR - LEFT HAND DRIVE - AUTOPILOT 2.5	2046132-82-A	1	For vehicles produced on and after August 21st, 2017.
2	ASY,HRN,MDLS,LHD4WD,FRUNK,COIL	Unrestricted	FRONT TRUNK HARNESS ASSEMBLY - COIL SUSPENSION - DUAL MOTOR - LEFT HAND DRIVE	1046132-93-R	1	For vehicles built since start of production until October 12th, 2016. With option codes: DRLH AND DV4W AND SU00 AND MI01.
2	ASY,HRN,MDLS,LHD4WD,FRUNK,COIL	Unrestricted	FRONT TRUNK HARNESS ASSEMBLY - COIL SUSPENSION - DUAL MOTOR - LEFT HAND DRIVE	1046132-07-S	1	For vehicles produced between October 12th and August 21st, 2017.
2	ASY,HRN,MDLS,LHD4WD,AP2.5,FRUNK,COIL	Unrestricted	FRONT TRUNK HARNESS ASSEMBLY - COIL SUSPENSION - DUAL MOTOR - LEFT HAND DRIVE - AUTOPILOT 2.5	2046132-03-A	1	For vehicles produced on and after August 21st, 2017.
3	ASY,HRN,HOOD,HEATED WASH NOZZLE	Unrestricted	HEATED WASHER NOZZLE HOOD ASSEMBLY HARNESS	1025202-00-C	1	For vehicles with option code CW02.

Panoramic Roof and Head Lining Harness

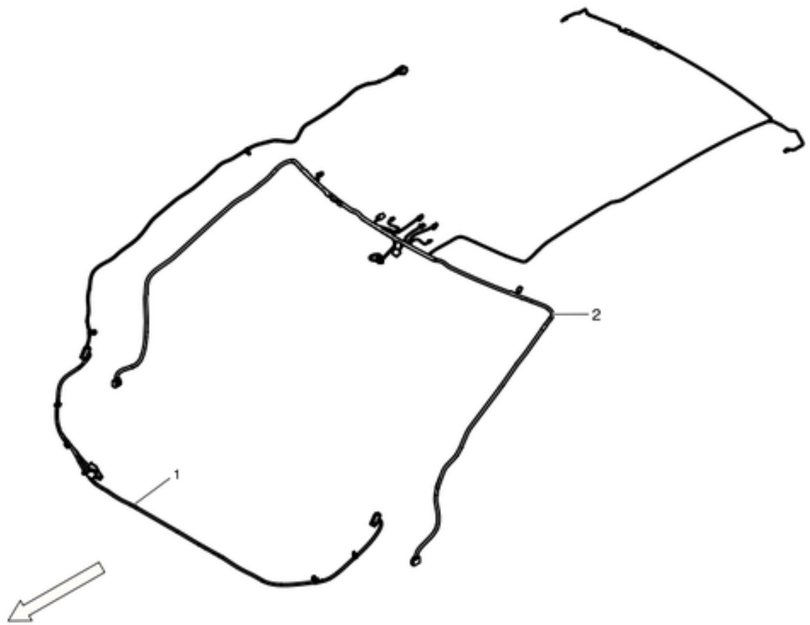

No	Part Name	Category	Part Description	Part Number	Qty	Comments
1	ASY,HRN,SUNROOF,MDLS	Unrestricted	SUNROOF HARNESS ASSEMBLY	1005311-00-L	1	
2	ASY,HARN,HEADLINER,GEN 2,MDLS,NCAP,INTR	Unrestricted	GENERATION 2 HEADLINER HARNESS ASSEMBLY - EU NCAP AND INTRUSION SENSOR	1037523-01-P	1	
2	ASY,HARN,HEADLINER,GEN 2,MDLS,BASE	Unrestricted	GENERATION 2 HEADLINER HARNESS ASSEMBLY - BASE	N/A	1	use 1037523-01-P. OK to use -M. Vehicles built before 10/3/16 use -0X-, vehicles built after 10/3/16 use -9X-.
2	ASY,HARN,HEADLINER,GEN 2,MDLS,INTR	Unrestricted	GENERATION 2 HEADLINER HARNESS ASSEMBLY - INTRUSION SENSOR	N/A	1	use 1037523-01-P. OK to use -M. Vehicles built before 10/3/16 use -0X-, vehicles built after 10/3/16 use -9X-.

Rear Bumper and Subframe Harness

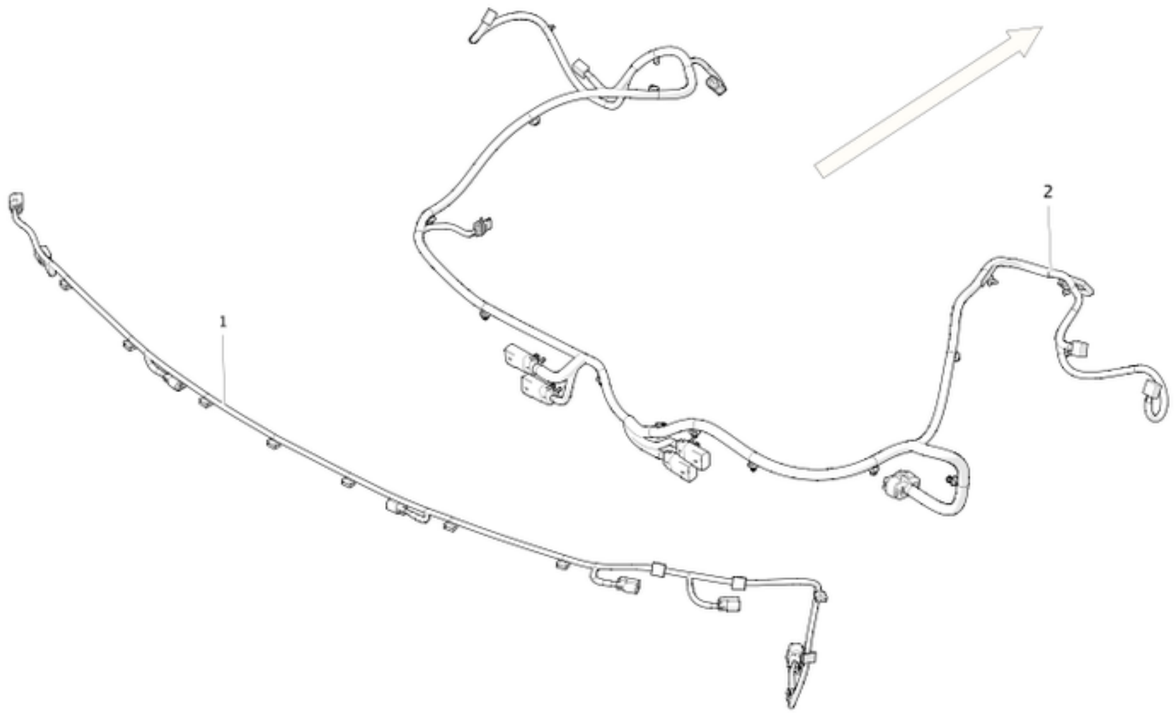

No	Part Name	Category	Part Description	Part Number	Qty	Comments
1	ASY,HRN,MDLS,ALL,BUMP RR	Unrestricted	REAR BUMPER HARNESS ASSEMBLY	1004421-04-Q	1	For vehicles produced until October 12th, 2016. With option codes: DA01, DA02.
1	ASY,HRN,MDLS,ALL,BUMP RR	Unrestricted	REAR BUMPER HARNESS ASSEMBLY	1004421-04-T	1	For vehicle produced on and after October 12th, 2016. With option codes: APH0, APH2.
2	ASY,HRN,MDLS,2WD+4WD LS,SUBFRAME RR,AIR	Unrestricted	REAR SUBFRAME HARNESS ASSEMBLY - AIR SUSPENSION	1004430-00-S	1	For vehicules produced until November 23rd, 2016 use on both performance and non-performance cars. After November 23rd, 2016 use only in performance cars.
2	ASY,HRN,MDLS,4WD+2WD LS,SFRR,AIR,BB+BM	Unrestricted	REAR SUBFRAME HARNESS ASSEMBLY - AIR SUSPENSION	1004430-04-S	1	For vehicles produced on and after November 23rd, 2016, with option codes: SU01 AND DV2W. Only non-performance cars.
2	ASY,HRN,MDLS,2WD+4WD LS,SUBFRAME RR,COIL	Unrestricted	REAR SUBFRAME HARNESS ASSEMBLY - COIL SUSPENSION	1004430-91-R	1	For vehicules produced until November 23rd, 2016 use on both performance and non-performance cars. After November 23rd, 2016 use only in performance cars.
2	ASY,HRN,MDLS,4WD+2WD LS,SFRR,COIL,BB+PM	Unrestricted	REAR SUBFRAME HARNESS ASSEMBLY - COIL SUSPENSION	1004430-05-S	1	For vehicles produced on and after November 23rd, 2016, with option codes: SU00 AND DV2W. Only non-prformance cars.
2	ASY,HRN,MDLS,4WD SS,SUBFRAME RR,AIR	Unrestricted	REAR SUBFRAME HARNESS ASSEMBLY - AIR SUSPENSION	1004430-92-R	1	For vehicles produced until November 23rd, 2016. With option codes: SU01 AND DV4W AND X025 AND MI01.
2	ASY,HRN,MDLS,4WD SS,SFRR,AIR,BASE BB+BM	Unrestricted	REAR SUBFRAME HARNESS ASSEMBLY - AIR SUSPENSION	1004430-06-S	1	For vehicles produced on and after November 23rd, 2016. With option codes: SU01 AND DV4W AND X025 AND MI01SU01 AND DV4W AND X025.
2	ASY,HRN,MDLS,4WD SS,SUBFRAME RR,COIL	Unrestricted	REAR SUBFRAME HARNESS DUAL MOTOR ASSEMBLY - COIL SUSPENSION	1004430-03-S	1	For vehicles produced until November 23rd, 2016, with option codes: SU00 AND DV4W AND X025. Ok to replace 1004430-93-R
2	AASY,HRN,MDLS,4WD SS,SFRR,COIL,BB+BM	Unrestricted	REAR SUBFRAME HARNESS DUAL MOTOR ASSEMBLY - COIL SUSPENSION	1004430-07-S	1	For vehicles produced on and after November 23rd, 2016, with option codes: SU00 AND DV4W AND X025

HORN

Horns

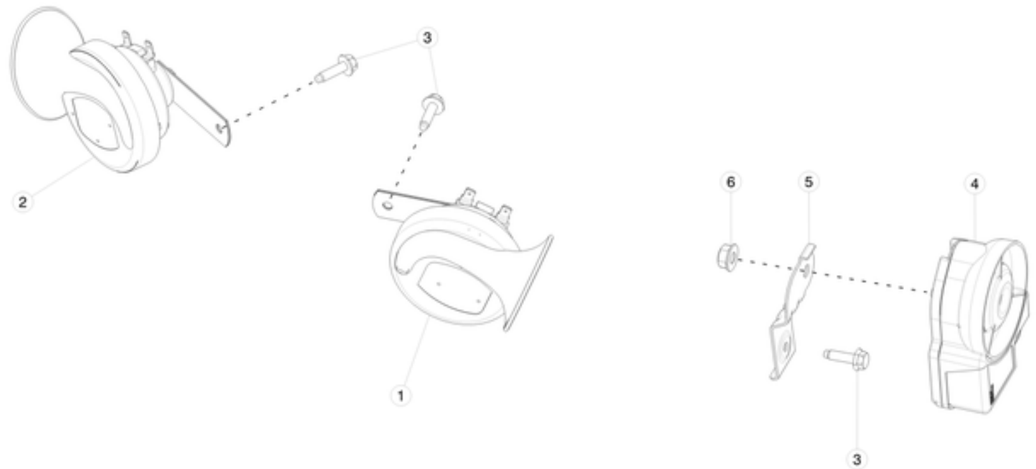

No	Part Name	Category	Part Description	Part Number	Qty	Comments
1	HORN - ELECTRICAL, 12V, 510 Hz	Unrestricted	HORN - 510HZ	1024911-00-C	1	
2	HORN - ELECTRICAL, 12V, 410 Hz	Unrestricted	HORN - 410HZ	1024910-00-C	1	
3	BLT HEX WSHR MG6-2.0x23.3	Unrestricted	BOLT HEX WASHER 6-2.0x23.3	1008970-00-A	2	
3	BLT HF M6-1.00x20[8.8]ZnAlW	Unrestricted	BOLT M6-1.00x20 ZINC ALUMINUM	1009420-00-A	2	Use to mount horn to active louver.
4	BATTERY BACKED SIREN	Unrestricted	BATTERY BACKED SIREN	1015860-00-A	1	
5	BBS BRACKET	Unrestricted	BBS BRACKET	1017382-00-A	1	
6	NUT,M8-1.25,HF,Steel[10],ZnAl,BLACK	Unrestricted	NUT,M8-1.25,HF,Steel[10],ZnAl,BLACK	1006628-01-A	1	
*	BLT PANFLG M6-1.00x12[9.8]ZnAl W/PATCH	Unrestricted	BOLT PANHEAD FLANGE M6-1.00x12MM - ZINC ALUMINUM WITH PATCH	1025897-00-A	6	
*	BLT HF M6-1.00x20[8.8]ZnAlW	Unrestricted	BLT HF M6-1.00x20[8.8]ZnAlW	1009420-00-A	2	
*	CLIP, M6,BUR100015	Unrestricted	CLIP, M6, BUR100015	1013802-00-B	2	Order in quantities of 50; minimum order: 50.
*	SEAL, FOAM	Unrestricted	SEAL, FOAM	NA	2	

INTERIOR LIGHTING

Dome Lights

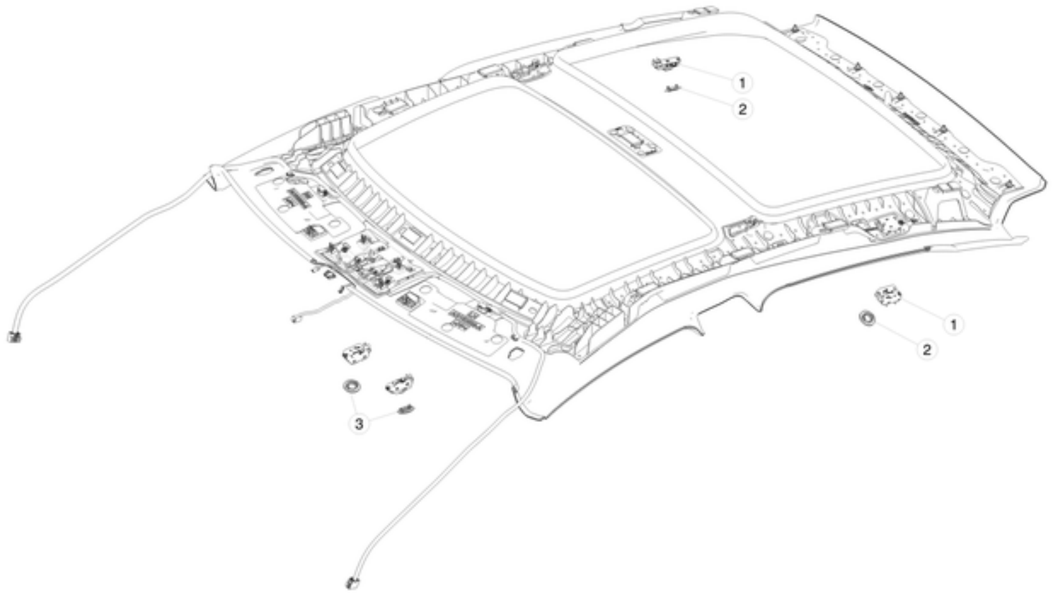

No	Part Name	Category	Part Description	Part Number	Qty	Comments
1	MAP LIGHT,REAR RH LH	Unrestricted	MAP LIGHT,REAR RH LH	1002484-00-D	2	C = 6000-7000K (white tint) vs. -D = 2900-3200K (yellow tint). OK to use -C or newer. Replace with same version as on vehicle (C or D).
2	INTERIOR RR LIGHT BEZEL - FOG	Unrestricted	INTERIOR REAR LIGHT BEZEL WHITE	1002547-00-B	2	
2	INTERIOR RR LIGHT BEZEL - BLACK	Unrestricted	INTERIOR REAR LIGHT BEZEL BLACK	1002547-02-B	2	
3	INTERIOR FRT LIGHT BEZEL LH/RH - FOG - SMALL	Unrestricted	INTERIOR FRONT LIGHT BEZEL WHITE	1023772-00-A	2	
3	INTERIOR FRT LIGHT BEZEL LH/RH - BLACK - SMALL	Unrestricted	INTERIOR FRONT LIGHT BEZEL BLACK	1023772-02-A	2	

INTERIOR SWITCHES

Switches



No	Part Name	Category	Part Description	Part Number	Qty	Comments
1	ASY, STEERING CONTROL SWITCH HARNESS	Unrestricted	STEERING CONTROL SWITCH ASSEMBLY HARNESS	1013242-00-C	1	Includes both left and right switches. OK to use A and newer. Use with 1st generation steering wheel control module - 1008471-00-A. Use with VIN less than approximately P55200 (1st generation steering wheel).
1	ASY, STEERING CONTROL SWITCH HARNESS	Unrestricted	STEERING CONTROL SWITCH ASSEMBLY HARNESS	1013242-00-E	1	OK to use -D for non-heated steering wheels only. -E is for heated and non-heated steering wheels. Includes both left and right switches. Use with 2nd generation steering wheel control module - 1033404-00-A or 1042701-00-A and Use with 1023381-01-E, 1023381-00-E, 1022506-01-E, 1022506-00-E, 1036778-00-A, 1036778-01-A, 1036779-00-A, 1036779-01-A. Use with VIN greater than approximately P55200 (2nd generation steering wheel).
1	ASY, STEERING CONTROL SWITCH HARNESS	Unrestricted	ASY, STEERING CONTROL SWITCH HARNESS	1013242-00-F	1	
2	SWITCH, HAZARD, IP	Unrestricted	SWITCH, HAZARD, IP	6008905-00-C	1	
3	SWITCH, GLOVE BOX, IP	Unrestricted	SWITCH, GLOVE BOX, IP	6008906-00-C	1	

KEYLESS ENTRY AND SECURITY

Key Fob

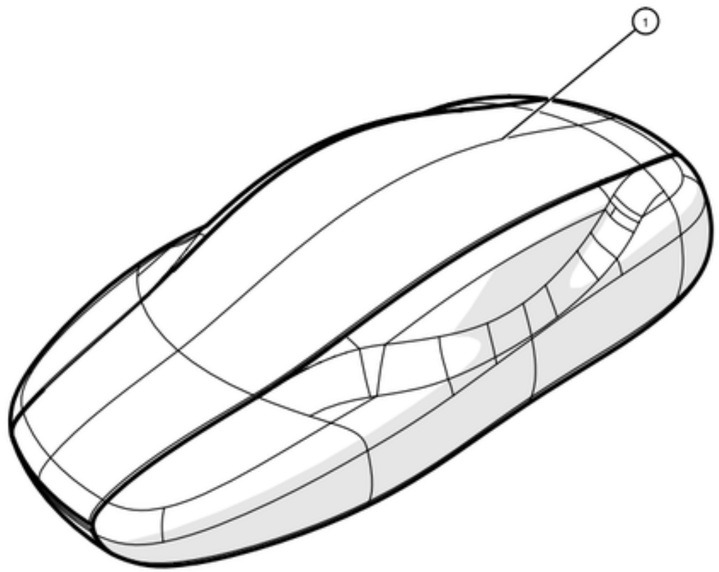

No	Part Name	Category	Part Description	Part Number	Qty	Comments
1	KEY FOB BASIC, 315MHz, MODEL S, V1.5	Unrestricted	MODEL S KEY FOB VERSION 1.5 - 315MHZ	1043806-00-B	2	
*	KEY FOB ENCLOSURE SPARES KIT, MODEL S	Unrestricted	MODEL S KEY FOB ENCLOSURE SPARES KIT	1032984-00-C	1	Without printed circuit board.
*	BATTERY TRANSMITTER, TYPE CR2032	Unrestricted		2006794	1	Order in quantities of 10; minimum order: 10.

Remote and Passive Entry

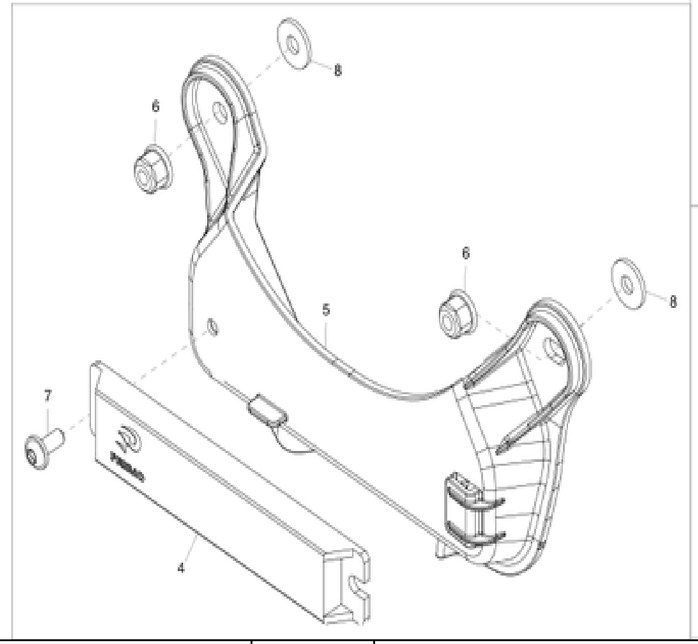

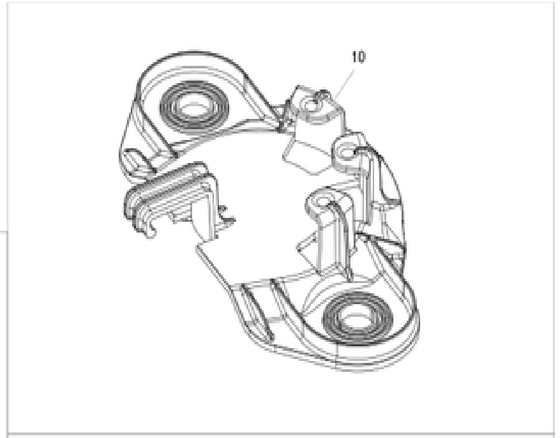

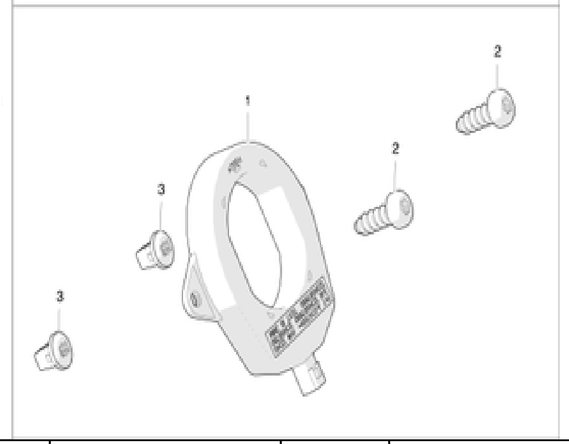

No	Part Name	Category	Part Description	Part Number	Qty	Comments
1	COIL - LF - PASSIVE ENTRY MODEL S	Unrestricted	LOW FREQUENCY PASSIVE ENTRY COIL	1005627-00-B	5	
*	DUAL LOCK 250 25 x 25	Unrestricted	DUAL LOCK 25MM x 25MM	1006396-00-A	4	
2	BLT,TPG,TRX,BTN,ST4.2x1.4-20[SS]-S-01	Unrestricted	BOLT, TORX, BUTTON HEAD, M4.2x1.4	1014049-00-B	14	
3	SCREW GROMMET	Unrestricted	GROMMET, SCREW, M5 SELF-TAPPING	1003209-00-A	14	Order in quantities of 100; minimum order: 100.
4	ANTENNA PASSIVE ENTRY	Unrestricted	PASSIVE ENTRY ANTENNA	1014951-00-A	3	Rectangular antenna - 2 are used in the instrument panel end caps and 1 is used in the rear bumper
5	BRACKET, PASSIVE ENTRY, RR END	Unrestricted	REAREND PASSIVE ENTRY ANTENNA BRACKET	1015865-00-A	1	
6	NUT LCK DT HF M6x1.00 4-ZnAl	Unrestricted	NUT, LOCK, HEX, FLANGE, M6x1.00	1004378-00-B	2	Use to install 1015865-00-A. Order in quantities of 50; minimum order: 50.
7	SCR,M5x10,PT,TORX,ST,ZnAl	Unrestricted	SCREW, M5x10, TORX, ZINC ALUMINUM	1008630-00-A	1	use to install 1015865-00-A
8	WSHR,RUBBER,TBD, roof rack mount	Unrestricted	RUBBER WASHER	1013746-00-A	2	use to install 1015865-00-A
9	SCR,M4-1.46X10,PT,TRX,WSHR,ZnBlue	Unrestricted	SCREW, M4-1.46X10MM, MATPOINT,TORX, WASHER, ZINC NICKEL BLACK	1013254-00-B	4	Use to install Antenna Passive Entry to instrument panel end caps. Order in quantities of 50; minimum order: 50.
10	BRACKET, DEAD KEYFOB	Unrestricted	DEAD KEYFOB BRACKET	1019045-00-A	1	use to install item #1
11	RVT PUSH-PULL 10MM HOLE	Unrestricted	RIVET PUSH-PULL 10MM HOLE	1020213-00-A	2	use to install item #10
*	DUAL LOCK, 25.0 x 20.0	Unrestricted	DUAL LOCK 25MM X 20MM	1008246-00-B	1	use on passive entry antenna in frunk

PARKING SENSORS

Module - Park Assist

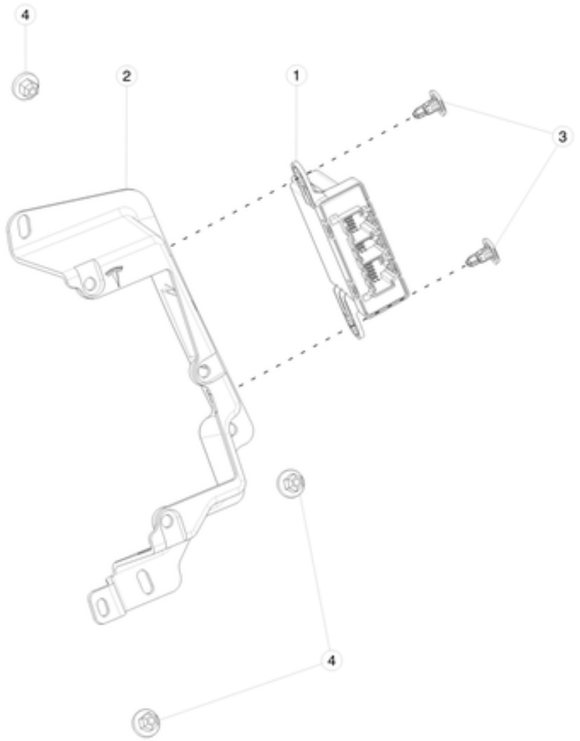

No	Part Name	Category	Part Description	Part Number	Qty	Comments
1	ECU, PARK ASSIST MDLS/X	Unrestricted	ECU, PARK ASSIST MDLS/X	1048476-00-D	1	For vehicles produced until October 12th,2016.
12	PARK ASSIST ECU	Unrestricted	ECU, PARK ASSIST, COYOTE, MDLS/X	1100308-00-A	1	For vehicles produced between October 12th, 2016 and August 21st, 2017.
12	PARK ASSIST ECU	Unrestricted	ECU, PARK ASSIST, APH 2.5, MDLS/X	1129519-00-A	1	For vehicles produced on and after August 21st, 2017.
2	BRACKET,ECU,PARK BRAKE PWR LIFTGATE	Unrestricted	BRACKET,ECU,PARK BRAKE PWR LIFTGATE	1051906-00-A	1	
3	RVT PUSH-PULL 8X18X20.0	Unrestricted	RVT PUSH-PULL 8X18X20.0	1006521-00-A	2	
4	NUT,t5,HF,PLASTIC,THREADED	Unrestricted	NUT,t5,HF,PLASTIC,THREADED	1013805-00-A	3	

Parking Sensors Autopilot 1.0

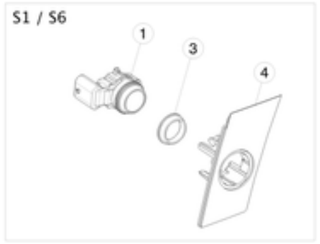

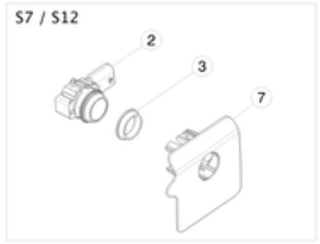

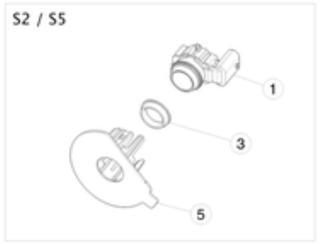

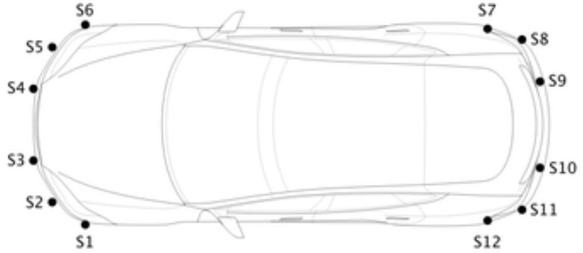

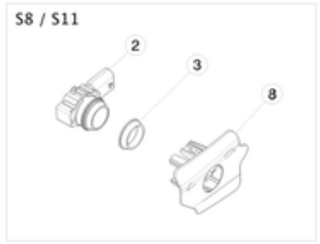

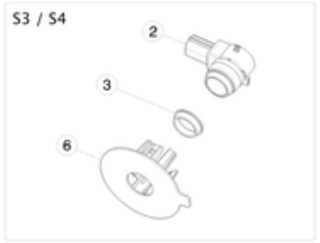

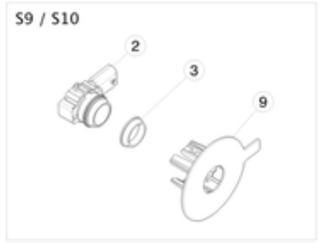

No	Part Name	Category	Part Description	Part Number	Qty	Comments
1	PARK ASSIST SENSOR - AXIAL - SIERRA BLACK	Unrestricted	PARK ASSIST SENSOR - AXIAL - SOLID BLACK - AT S1/S6 AND S2/S5 POSITIONS	1048473-01-A	4	For vehicles with exterior option code: PBSB
1	PARK ASSIST SENSOR - AXIAL - SAN SIMEON SILVER	Unrestricted	PARK ASSIST SENSOR - AXIAL - SILVER METALLIC - AT S1/S6 AND S2/S5 POSITIONS	1048473-02-A	4	For vehicles with exterior option code: PMSS
1	PARK ASSIST SENSOR - AXIAL - CATALINA WHITE	Unrestricted	PARK ASSIST SENSOR - AXIAL - SOLID WHITE - AT S1/S6 AND S2/S5 POSITIONS	1048473-03-A	4	For vehicles with exterior option code: PBCW
1	PARK ASSIST SENSOR - AXIAL - SHASTA PEARL WHITE	Unrestricted	PARK ASSIST SENSOR - AXIAL - PEARL WHITE - AT S1/S6 AND S2/S5 POSITIONS	1048473-04-A	4	For vehicles with exterior option code: PPSW
1	PARK ASSIST SENSOR - AXIAL - SUNSET RED	Unrestricted	PARK ASSIST SENSOR - AXIAL - MULTI-COAT RED - AT S1/S6 AND S2/S5 POSITIONS	1048473-09-A	4	For vehicles with exterior option code: PPMR
1	PARK ASSIST SENSOR - AXIAL - STEEL GRAY	Unrestricted	PARK ASSIST SENSOR - AXIAL - STEEL GRAY - AT S1/S6 AND S2/S5 POSITIONS	1048473-10-A	4	For vehicles with exterior option code: PMNG
1	PARK ASSIST SENSOR - AXIAL - OCEAN BLUE	Unrestricted	PARK ASSIST SENSOR - AXIAL - DEEP METALLIC BLUE - AT S1/S6 AND S2/S5 POSITIONS	1048473-11-A	4	For vehicles with exterior option code: PPSB
1	PARK ASSIST SENSOR - AXIAL - OBSIDIAN BLACK	Unrestricted	PARK ASSIST SENSOR - AXIAL - OBSIDIAN BLACK - AT S1/S6 AND S2/S5 POSITIONS	1048473-13-A	4	For vehicles with exterior option code: PMBL
1	PARK ASSIST SENSOR - AXIAL - TITANIUM	Unrestricted	PARK ASSIST SENSOR - AXIAL - TITANIUM - AT S1/S6 AND S2/S5 POSITIONS	1048473-14-A	4	For vehicles with exterior option code: PPTI
2	PARK ASSIST SENSOR - RADIAL - SIERRA BLACK	Unrestricted	PARK ASSIST SENSOR - RADIAL - SOLID BLACK - AT S3/S4, S7/S12, S8/S11 AND S9/S10 POSITIONS	1048474-01-A	8	For vehicles with exterior option code: PBSB
2	PARK ASSIST SENSOR - RADIAL - SAN SIMEON SILVER	Unrestricted	PARK ASSIST SENSOR - RADIAL - SILVER METALLIC AT S3/S4, S7/S12, S8/S11 AND S9/S10 POSITIONS	1048474-02-A	8	For vehicles with exterior option code: PMSS
2	PARK ASSIST SENSOR - RADIAL - CATALINA WHITE	Unrestricted	PARK ASSIST SENSOR - RADIAL - SOLID WHITE - AT S3/S4, S7/S12, S8/S11 AND S9/S10 POSITIONS	1048474-03-A	8	For vehicles with exterior option code: PBCW
2	PARK ASSIST SENSOR - RADIAL - SHASTA PEARL WHITE	Unrestricted	PARK ASSIST SENSOR - RADIAL - PEARL WHITE - AT S3/S4, S7/S12, S8/S11 AND S9/S10 POSITIONS	1048474-04-A	8	For vehicles with exterior option code: PPSW
2	PARK ASSIST SENSOR - RADIAL - SUNSET RED	Unrestricted	PARK ASSIST SENSOR - RADIAL - MULTI-COAT RED - AT S3/S4, S7/S12, S8/S11 AND S9/S10 POSITIONS	1048474-09-A	8	For vehicles with exterior option code: PPMR
2	PARK ASSIST SENSOR - RADIAL - STEEL GRAY	Unrestricted	PARK ASSIST SENSOR - RADIAL - STEEL GRAY - AT S3/S4, S7/S12, S8/S11 AND S9/S10 POSITIONS	1048474-10-A	8	For vehicles with exterior option code: PMNG

2	PARK ASSIST SENSOR - RADIAL - OCEAN BLUE	Unrestricted	PARK ASSIST SENSOR - RADIAL - DEEP METALLIC BLUE - S3/S4, S7/S12, S8/S11 AND S9/S10 POSITIONS	1048474-11-A	8	For vehicles with exterior option code: PPSB
2	PARK ASSIST SENSOR - RADIAL - OBSIDIAN BLACK	Unrestricted	PARK ASSIST SENSOR - RADIAL - OBSIDIAN BLACK - AT S3/S4, S7/S12, S8/S11 AND S9/S10 POSITIONS	1048474-13-A	8	For vehicles with exterior option code: PMBL
2	PARK ASSIST SENSOR - RADIAL - TITANIUM	Unrestricted	PARK ASSIST SENSOR - RADIAL - TITANIUM - AT S3/S4, S7/S12, S8/S11 AND S9/S10 POSITIONS	1048474-14-A	8	For vehicles with exterior option code: PPTI
3	RETAINER RING, DECOUPLING, CLEAR	Unrestricted	DECOUPLING RETAINER RING FOR SENSORS - CLEAR	1014395-00-A	12	For vehicles with exterior option codes: PMSS, PMTG, PPTI
3	RETAINER RING, DECOUPLING, BLACK	Unrestricted	DECOUPLING RETAINER RING FOR SENSORS - BLACK	1014395-01-A	12	For vehicles with exterior option codes: PBSB, PMAB, PMBL, PMMB, PMSG, PPSB, PMNG
3	RETAINER RING, DECOUPLING, CATALINA WHITE	Unrestricted	DECOUPLING RETAINER RING FOR SENSORS - CATALINA WHITE	1014395-02-A	12	For vehicles with exterior option codes: PBCW, PPSW
3	RETAINER RING, DECOUPLING, MUIR RED	Unrestricted	DECOUPLING RETAINER RING FOR SENSORS - MUIR RED	1014395-05-A	12	For vehicles with exterior option code: PPMR
4	PARK ASSIST RETAINERS-S1	Unrestricted	PARK ASSIST RETAINERS AT S1 POSITION	1048516-00-D	1	
4	PARK ASSIST RETAINERS-S6	Unrestricted	PARK ASSIST RETAINERS AT S6 POSITION	1048521-00-D	1	
5	PARK ASSIST RETAINERS-S2	Unrestricted	PARK ASSIST RETAINERS AT S2 POSITION	1059991-00-B	1	
5	PARK ASSIST RETAINERS-S5	Unrestricted	PARK ASSIST RETAINERS AT S5 POSITION	1059994-00-C	1	
6	PARK ASSIST RETAINERS-S3	Unrestricted	PARK ASSIST RETAINERS AT S3 POSITION	1059992-00-B	1	
6	PARK ASSIST RETAINERS-S4	Unrestricted	PARK ASSIST RETAINERS AT S4 POSITION	1059993-00-B	1	
7	PARK ASSIST RETAINERS-S7	Unrestricted	PARK ASSIST RETAINERS AT S7 POSITION	1059999-00-C	1	
7	PARK ASSIST RETAINERS-S12	Unrestricted	PARK ASSIST RETAINERS AT S12 POSITION	1060009-00-C	1	
8	PARK ASSIST RETAINERS-S8	Unrestricted	PARK ASSIST RETAINERS AT S8 POSITION	1060000-00-C	1	
8	PARK ASSIST RETAINERS-S11	Unrestricted	PARK ASSIST RETAINERS AT S11 POSITION	1060008-00-C	1	
9	PARK ASSIST RETAINERS-S9	Unrestricted	PARK ASSIST RETAINERS AT S9 POSITION	1060006-00-C	1	
9	PARK ASSIST RETAINERS-S10	Unrestricted	PARK ASSIST RETAINERS AT S10 POSITION	1060007-00-C	1	

Parking Sensors Autopilot 2.0

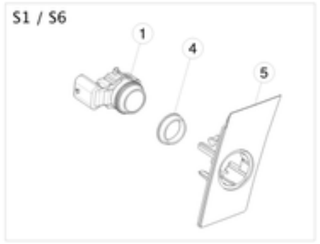

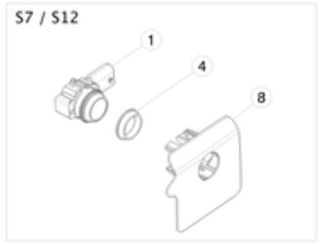

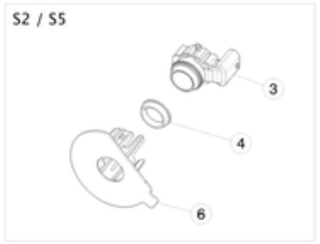

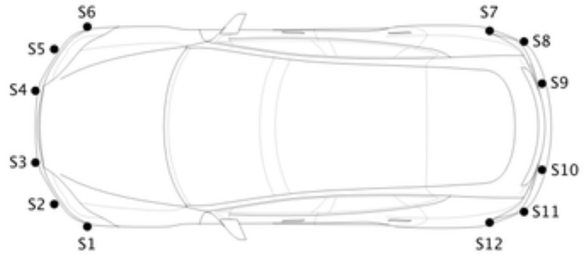

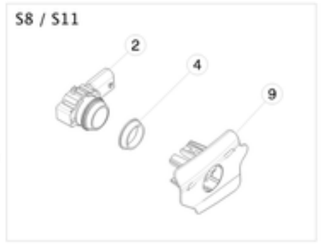

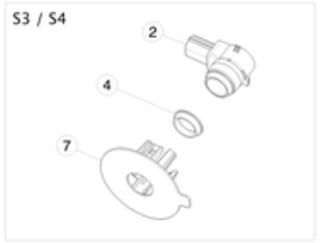

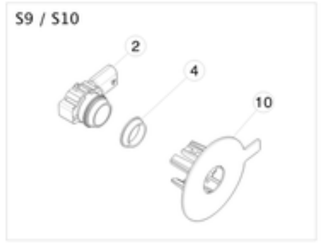

No	Part Name	Category	Part Description	Part Number	Qty	Comments
1	VALEO APP USS, RADIAL, UNPAINTED	Unrestricted	PARK ASSIST SENSOR - RADIAL - UNPAINTED - AT S1/S6 AND S7/S12 POSITIONS	1100297-00-D	4	For vehicles produced on and after October 12th, 2016. 1100297-00-D, -B and -A are fully interchangeable. Use 1100297-00-D to replace 1100297-02 (Catalina White-PBCW), 1100297-08 (Titanium-PPTI) and 1100297-12 (Signature Red-PPSR)
1	USS APP RADIAL, DCR, ASSY, BLACK SOLID	Unrestricted	PARK ASSIST SENSOR AND DECOUPLING RING ASSEMBLY - RADIAL - BLACK SOLID - AT S1/S6 AND S7/S12 POSITIONS	1127502-01-C	4	For vehicles produced on and after October 12th, 2016. Use 1127502-01-C to replace 1100297-11-B and -A (Black Solid-PBSB)
1	USS APP RADIAL, DCR, ASSY, SAN SIMEON SIIVER	Unrestricted	PARK ASSIST SENSOR AND DECOUPLING RING ASSEMBLY - RADIAL - SAN SIMEON SIIVER - AT S1/S6 AND S7/S12 POSITIONS	1127502-03-C	4	For vehicles produced on and after October 12th, 2016. Use 1127502-03-C to replace 1100297-06-B and -A (San Simeon Silver-PMSS)
1	USS APP RADIAL, DCR, ASSY, SUNSET RED	Unrestricted	PARK ASSIST SENSOR AND DECOUPLING RING ASSEMBLY - RADIAL - SUNSET RED - AT S1/S6 AND S7/S12 POSITIONS	1127502-08-C	4	For vehicles produced on and after October 12th, 2016. Use 1127502-08-C to replace 1100297-05-B and -A (Sunset Red-PPMR)
1	USS APP RADIAL, DCR, ASSY, PEARL WHITE	Unrestricted	PARK ASSIST SENSOR AND DECOUPLING RING ASSEMBLY - RADIAL - PEARL WHITE - AT S1/S6 AND S7/S12 POSITIONS	1127502-11-C	4	For vehicles produced on and after October 12th, 2016. Use 1127502-11-C to replace 1100297-03-B and -A (Pearl White-PPSW)
1	USS APP RADIAL, DCR, ASSY, MIDNIGHT SILVER	Unrestricted	PARK ASSIST SENSOR AND DECOUPLING RING ASSEMBLY - RADIAL - MIDNIGHT SILVER - AT S1/S6 AND S7/S12 POSITIONS	1127502-12-C	4	For vehicles produced on and after October 12th, 2016. Use 1127502-12-C to replace 1100297-04-B and -A (Midnight Silver-PMNG)
1	USS APP RADIAL, DCR, ASSY, DEEP BLUE	Unrestricted	PARK ASSIST SENSOR AND DECOUPLING RING ASSEMBLY - RADIAL - DEEP BLUE - AT S1/S6 AND S7/S12 POSITIONS	1127502-13-C	4	For vehicles produced on and after October 12th, 2016. Use 1127502-13-C to replace 1100297-07-B and -A (Deep Blue-PPSB)
1	USS APP RADIAL, DCR, ASSY, OBSIDIAN BLACK	Unrestricted	PARK ASSIST SENSOR AND DECOUPLING RING ASSEMBLY - RADIAL - OBSIDIAN BLACK - AT S1/S6 AND S7/S12 POSITIONS	1127502-14-C	4	For vehicles produced on and after October 12th, 2016. Use 1127502-14-C to replace 1100297-09-B and -A (Obsidian Black-PMBL)
2	VALEO HP USS, RADIAL, UNPAINTED	Unrestricted	PARK ASSIST SENSOR - RADIAL - UNPAINTED - AT S3/S4, S8/S11 AND S9/S10 POSITIONS	1099611-00-D	6	For vehicles produced on and after October 12th, 2016. 1099611-00-D, -B and -A are fully interchangeable. Use 1099611-00-D to replace 1099611-02 (Catalina White-PBCW), 1099611-08 (Titanium-PPTI) and 1099611-12 (Signature Red-PPSR)
2	USS UPA RADIAL, DCR, ASSY, BLACK SOLID	Unrestricted	PARK ASSIST SENSOR AND DECOUPLING RING ASSEMBLY - RADIAL - BLACK SOLID - AT S3/S4, S8/S11 AND S9/S10 POSITIONS	1127503-01-C	6	For vehicles produced on and after October 12th, 2016. Use 1127506-01-C to replace 1099611-11-B and -A (Black Solid-PBSB)

2	USS UPA RADIAL, DCR, ASSY, SAN SIMEON SILVER	Unrestricted	PARK ASSIST SENSOR AND DECOUPLING RING ASSEMBLY - RADIAL - SAN SIMEON SILVER - AT S3/S4, S8/S11 AND S9/S10 POSITIONS	1127503-03-C	6	For vehicles produced on and after October 12th, 2016. Use 1127506-03-C to replace 1099611-06-B and -A (San Simeon Silver-PMSS)
2	USS UPA RADIAL, DCR, ASSY, SUNSET RED	Unrestricted	PARK ASSIST SENSOR AND DECOUPLING RING ASSEMBLY - RADIAL - SUNSET RED/RED MULTICOAT - AT S3/S4, S8/S11 AND S9/S10 POSITIONS	1127503-08-C	6	For vehicles produced on and after October 12th, 2016. Use 1127503-08-C to replace 1099611-05-B and -A (Sunset Red/Red Multicoat-PPMR)
2	USS UPA RADIAL, DCR, ASSY, PEARL WHITE	Unrestricted	PARK ASSIST SENSOR AND DECOUPLING RING ASSEMBLY - RADIAL - PEARL WHITE - AT S3/S4, S8/S11 AND S9/S10 POSITIONS	1127503-11-C	6	For vehicles produced on and after October 12th, 2016. Use 1127503-11-C to replace 1099611-03-B and -A (Pearl White-PPSW)
2	USS UPA RADIAL, DCR, ASSY, MIDNIGHT SILVER	Unrestricted	PARK ASSIST SENSOR AND DECOUPLING RING ASSEMBLY - RADIAL - MIDNIGHT SILVER - AT S3/S4, S8/S11 AND S9/S10 POSITIONS	1127503-12-C	6	For vehicles produced on and after October 12th, 2016. Use 1127503-12-C to replace 1099611-04-B and -A (Midnight Silver-PMNG)
2	USS UPA RADIAL, DCR, ASSY, DEEP BLUE	Unrestricted	PARK ASSIST SENSOR AND DECOUPLING RING ASSEMBLY - RADIAL - DEEP BLUE - AT S3/S4, S8/S11 AND S9/S10 POSITIONS	1127503-13-C	6	For vehicles produced on and after October 12th, 2016. Use 1127503-13-C to replace 1099611-07-B and -A (Deep Blue-PPSB)
2	USS UPA RADIAL, DCR, ASSY, OBSIDIAN BLACK	Unrestricted	PARK ASSIST SENSOR AND DECOUPLING RING ASSEMBLY - RADIAL - OBSIDIAN BLACK - AT S3/S4, S8/S11 AND S9/S10 POSITIONS	1127503-14-C	6	For vehicles produced on and after October 12th, 2016. Use 1127503-14-C to replace 1099611-09-B and -A (Obsidian Black-PMBL)
3	VALEO HP USS, AXIAL, UNPAINTED	Unrestricted	PARK ASSIST SENSOR - AXIAL - UNPAINTED - AT S2/S5 POSITIONS	1099612-00-D	2	For vehicles produced on and after October 12th, 2016. 1099612-00-D, -B and -A are fully interchangeable. Use 1099612-00-D to replace 1099612-02 (Catalina White-PBCW), 1099612-08 (Titanium-PPTI) and 1099612-12 (Signature Red-PPSR)
3	USS UPA AXIAL, DCR, ASSY, BLACK SOLID	Unrestricted	PARK ASSIST SENSOR AND DECOUPLING RING ASSEMBLY - AXIAL - BLACK SOLID - AT S2/S5 POSITIONS	1127504-01-C	2	For vehicles produced on and after October 12th, 2016. Use 1127504-01-C to replace 1099612-11-B and -A (Black Solid-PBSB)
3	USS UPA AXIAL, DCR, ASSY, SAN SIMEON SILVER	Unrestricted	PARK ASSIST SENSOR AND DECOUPLING RING ASSEMBLY - AXIAL - SAN SIMEON SILVER - AT S2/S5 POSITIONS	1127504-03-C	2	For vehicles produced on and after October 12th, 2016. Use 1127504-03-C to replace 1099612-06-B and -A (San Simeon Silver-PMSS)
3	USS UPA AXIAL, DCR, ASSY, SUNSET RED/RED MULTICOAT	Unrestricted	PARK ASSIST SENSOR AND DECOUPLING RING ASSEMBLY - AXIAL - SUNSET RED - AT S2/S5 POSITIONS	1127504-08-C	2	For vehicles produced on and after October 12th, 2016. Use 1127504-08-C to replace 1099612-05-B and -A (Sunset Red/Red Multicoat-PPMR)
3	USS UPA AXIAL, DCR, ASSY, PEARL WHITE	Unrestricted	PARK ASSIST SENSOR AND DECOUPLING RING ASSEMBLY - AXIAL - PEARL WHITE - AT S2/S5 POSITIONS	1127504-11-C	2	For vehicles produced on and after October 12th, 2016. Use 1127504-11-C to replace 1099612-03-B and -A (Pearl White-PPSW)
3	USS UPA AXIAL, DCR, ASSY, MIDNIGHT SILVER	Unrestricted	PARK ASSIST SENSOR AND DECOUPLING RING ASSEMBLY - AXIAL - MIDNIGHT SILVER - AT S2/S5 POSITIONS	1127504-12-C	2	For vehicles produced on and after October 12th, 2016. Use 1127504-12-C to replace 1099612-04-B and -A (Midnight Silver-PMNG)
3	USS UPA AXIAL, DCR, ASSY, DEEP BLUE	Unrestricted	PARK ASSIST SENSOR AND DECOUPLING RING ASSEMBLY - AXIAL - DEEP BLUE - AT S2/S5 POSITIONS	1127504-13-C	2	For vehicles produced on and after October 12th, 2016. Use 1127504-13-C to replace 1099612-07-B and -A (Deep Blue-PPSB)
3	USS UPA AXIAL, DCR, ASSY, OBSIDIAN BLACK	Unrestricted	PARK ASSIST SENSOR AND DECOUPLING RING ASSEMBLY - AXIAL - OBSIDIAN BLACK - AT S2/S5 POSITIONS	1127504-14-C	2	For vehicles produced on and after October 12th, 2016. Use 1127504-14-C to replace 1099612-09-B and -A (Obsidian Black-PMBL)
4	RETAINER RING, DECOUPLING, CLEAR	Unrestricted	DECOUPLING RETAINER RING FOR SENSORS - CLEAR	1014395-00-A	12	For vehicles with exterior option codes: PMSS, PMTG, PPTI
4	RETAINER RING, DECOUPLING, BLACK	Unrestricted	DECOUPLING RETAINER RING FOR SENSORS - BLACK	1014395-01-A	12	For vehicles with exterior option codes: PBSB, PMAB, PMBL, PMMB, PMSG, PPSB, PMNG
4	RETAINER RING, DECOUPLING, CATALINA WHITE	Unrestricted	DECOUPLING RETAINER RING FOR SENSORS - CATALINA WHITE	1014395-02-B	12	1014395-02-B and 1014395-02-A are fully interchangeable. For vehicles with exterior option codes: PBCW, PPSW
4	RETAINER RING, DECOUPLING, STEEL GREY	Unrestricted	DECOUPLING RETAINER RING FOR SENSORS - STEEL GREY	1014395-04-A	12	1014395-04-B and 1014395-04-A are fully interchangeable. For vehicles produced on and after October 12th, 2016. With exterior option codes: PMNG AND APH0, PMNG AND APH2
4	RETAINER RING, DECOUPLING, MUIR RED	Unrestricted	DECOUPLING RETAINER RING FOR SENSORS - MUIR RED	1014395-05-B	12	1014395-05-B and 1014395-05-A are fully interchangeable. For vehicles with exterior option code: PPMR
4	RETAINER RING, DECOUPLING, SAN SIMEN SILVER	Unrestricted	DECOUPLING RETAINER RING FOR SENSORS - SAN SIMEN SILVER	1014395-06-B	12	1014395-06-B and 1014395-06-A are fully interchangeable. For vehicles produced on and after October 12th, 2016. With exterior option codes: PMSS AND APH0, PMSS AND APH2
4	RETAINER RING, DECOUPLING, OCEAN BLUE	Unrestricted	DECOUPLING RETAINER RING FOR SENSORS - OCEAN BLUE	1014395-07-B	12	1014395-07-B and 1014395-07-A are fully interchangeable. For vehicles produced on and after October 12th, 2016. With exterior option codes: PPSB AND APH0, PPSB AND APH2
4	RETAINER RING, DECOUPLING, TITANIUM	Unrestricted	DECOUPLING RETAINER RING FOR SENSORS - TITANIUM	1014395-08-B	12	1014395-08-B and 1014395-08-A are fully interchangeable. For vehicles with exterior option codes: PPTI AND APH0, PPTI AND APH2
5	PARK ASSIST RETAINER, AUTOPILOT - S1	Unrestricted	PARK ASSIST RETAINER AT S1 POSITION, AUTOPILOT	1097478-00-C	1	For vehicles produced on and after October 12th, 2016 with option codes: APH0, APH2
5	PARK ASSIST RETAINER, AUTOPILOT - S6	Unrestricted	PARK ASSIST RETAINER AT S6 POSITION, AUTOPILOT	1097483-00-C	1	For vehicles produced on and after October 12th, 2016 with option codes: APH0, APH2
6	PARK ASSIST RETAINER, AUTOPILOT - S2	Unrestricted	PARK ASSIST RETAINER AT S2 POSITION, AUTOPILOT	1097479-00-A	1	For vehicles produced on and after October 12th, 2016 with option codes: APH0, APH2
6	PARK ASSIST RETAINER, AUTOPILOT - S5	Unrestricted	PARK ASSIST RETAINER AT S5 POSITION, AUTOPILOT	1097482-00-A	1	For vehicles produced on and after October 12th, 2016 with option codes: APH0, APH2
7	PARK ASSIST RETAINER, AUTOPILOT - S3	Unrestricted	PARK ASSIST RETAINER AT S3 POSITION, AUTOPILOT	1097480-00-A	1	For vehicles produced on and after October 12th, 2016 with option codes: APH0, APH2
7	PARK ASSIST RETAINER, AUTOPILOT - S4	Unrestricted	PARK ASSIST RETAINER AT S4 POSITION, AUTOPILOT	1097481-00-A	1	For vehicles produced on and after October 12th, 2016 with option codes: APH0, APH2
8	PARK ASSIST RETAINER, AUTOPILOT - S9	Unrestricted	PARK ASSIST RETAINER AT S9 POSITION, AUTOPILOT	1097486-00-A	1	For vehicles produced on and after October 12th, 2016 with option codes: APH0, APH2
8	PARK ASSIST RETAINER, AUTOPILOT - S10	Unrestricted	PARK ASSIST RETAINER AT S10 POSITION, AUTOPILOT	1097487-00-A	1	For vehicles produced on and after October 12th, 2016 with option codes: APH0, APH2
9	PARK ASSIST RETAINER, AUTOPILOT - S8	Unrestricted	PARK ASSIST RETAINER AT S8 POSITION, AUTOPILOT	1097485-00-A	1	For vehicles produced on and after October 12th, 2016 with option codes: APH0, APH2
9	PARK ASSIST RETAINER, AUTOPILOT - S11	Unrestricted	PARK ASSIST RETAINER AT S11 POSITION, AUTOPILOT	1097488-00-A	1	For vehicles produced on and after October 12th, 2016 with option codes: APH0, APH2
10	PARK ASSIST RETAINER, AUTOPILOT - S7	Unrestricted	PARK ASSIST RETAINER AT S7 POSITION, AUTOPILOT	1097484-00-A	1	For vehicles produced on and after October 12th, 2016 with option codes: APH0, APH2

10	PARK ASSIST RETAINER, AUTOPILOT - S12	Unrestricted	PARK ASSIST RETAINER AT S12 POSITION, AUTOPILOT	1097489-00-A	1	For vehicles produced on and after October 12th, 2016 with option codes: APH0, APH2

RADAR SENSORS

Radar Sensors

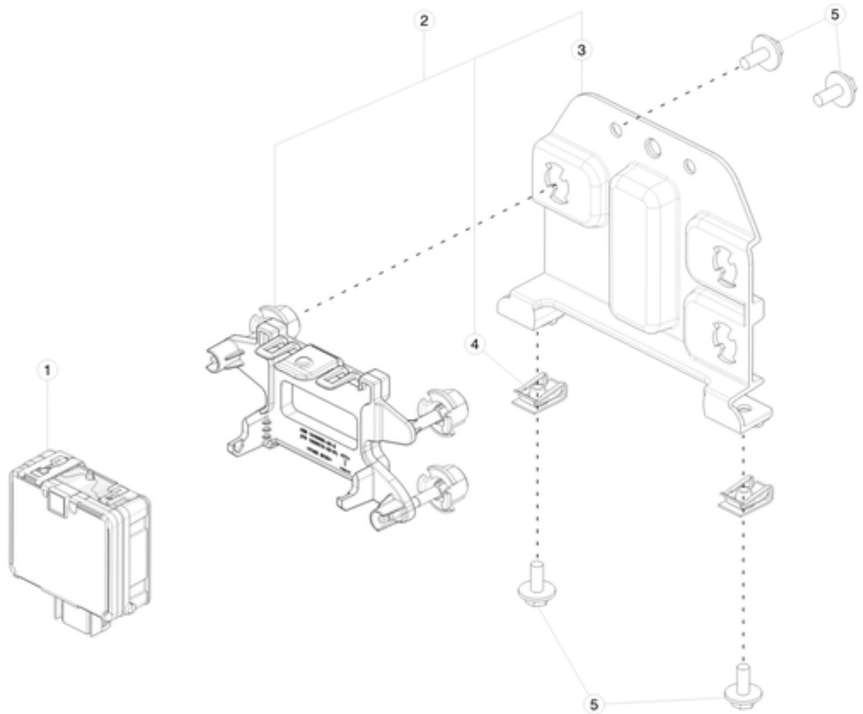

No	Part Name	Category	Part Description	Part Number	Qty	Comments
1	FRONT RADAR, NO HEATER	Unrestricted	FRONT RADAR, NO HEATER	1057551-00-B	1	For vehicles produced before August 21st, 2017
1	RADAR, SEVEN PIN PERPENDICULAR	Unrestricted	RADAR, SEVEN PIN PERPENDICULAR	1108647-00-B	1	For vehicles produced on and after August 21st, 2017
2	ASY, FR RADAR BRACKET, MS2	Unrestricted	FRONT RADAR BRACKET ASSEMBLY	1061953-00-E	1	For vehicles produced until August 21st, 2017. OK to replace 1061953-00-D and 1061953-00-C.
3	BOLT PF M5x50 PC88 GEAR	Unrestricted	BOLT PF M5x50 PC88 GEAR	1056449-00-A	3	
4	CIRCLIP,4x15x0.7,STL	Unrestricted	CIRCLIP,4x15x0.7,STL	1064470-00-A	3	
5	GROMMET.M5x0.8,PA66, 1.25-1.75 GRIP	Unrestricted	GROMMET.M5x0.8,PA66, 1.25-1.75 GRIP	1057425-00-A	3	
6	SCR,M5x0.8x14,BH,T25,ZnNi,PTCH	Unrestricted	SCR,M5x0.8x14,BH,T25,ZnNi,PTCH	1021188-00-A	2	

REAR CAMERA

Rear View Camera

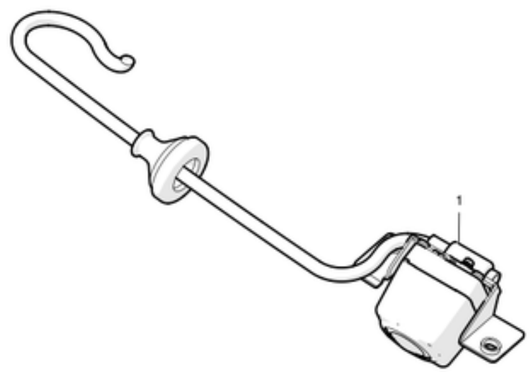

No	Part Name	Category	Part Description	Part Number	Qty	Comments
1	ASSY - CAMERA - REAR VIEW	Unrestricted	REAR VIEW CAMERA ASSEMBLY	1006773-00-F	1	Used on vehicles built before July 9, 2016. OK to use and replace 1006773-00-D and -E.
1	ASSY - CAMERA - REAR VIEW	Unrestricted	REAR VIEW CAMERA ASSEMBLY	1061269-00-B	1	Ok to use -A. Used on vehicles built on or after July 9, 2016. Not compatible with 1006773-00-D/E/F. 1061269-00-B can replace 1006773-00-F, but you also have to request 1050939-00-A Delphi Connector Clip, 6.35mm.
*	Delphi Connector Clip, 6.35mm	Unrestricted	Delphi Connector Clip, 6.35mm	1050939-00-A	1	To be requested along with PN 1061269-00-B to replace 1006773-00-F
*	FASTENER, BOLT, TORX25, M5-0.8x8MM	Unrestricted	BOLT, TORX25, M5-0.8x8MM	1006779-00-A	2	

WIPERS AND WASHERS

Windshield Washer Bottle and Pump

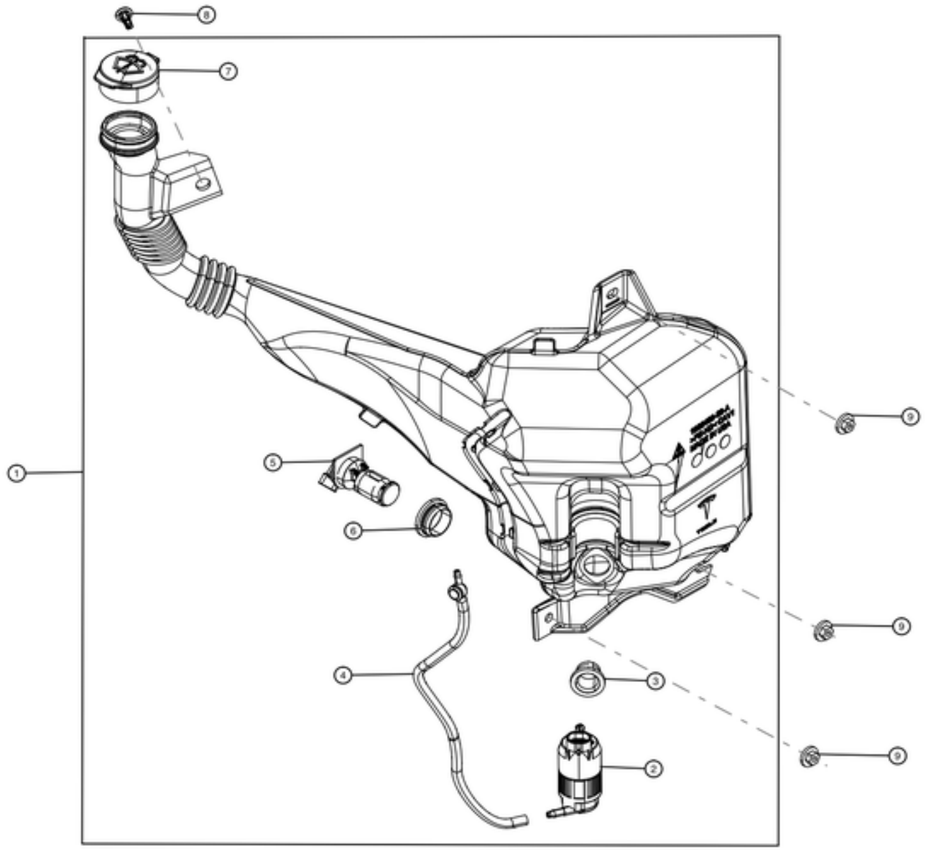

No	Part Name	Category	Part Description	Part Number	Qty	Comments
1	WASHER BOTTLE ASY	Unrestricted	WINDSHIELD WASHER RESERVOIR	1005400-00-C	1	
2	WASHER PUMP	Unrestricted	WASHER PUMP	1005453-00-A	1	
3	GROMMET - WASHER PUMP	Unrestricted	WASHER PUMP GROMMET	1005684-00-A	1	
4	JUMPER HOSE	Unrestricted	JUMPER HOSE	1005458-00-B	1	
5	LOW FLUID LEVEL SENSOR	Unrestricted	LOW FLUID LEVEL SENSOR	1005454-00-A	1	
6	GROMMET - LOW FLUID LEVEL SENSOR	Unrestricted	FLOAT SENSOR GROMMET	1005686-00-A	1	
7	CAP - WASHER BOTTLE	Unrestricted	WASHER FLUID CAP	1005685-00-A	1	
8	RVT PUSH PULL 3X18X20 CLIP	Unrestricted	RIVET PUSH-PULL 8X18X20.0	1006521-00-A	1	Order in quantities of 50; minimum order: 50.
9	M6 NUT WASHER	Unrestricted	NUT HEX M6-1.00 ZINC ALUMINUM	1005822-00-A	3	

Windshield Washer Nozzle and Tubing

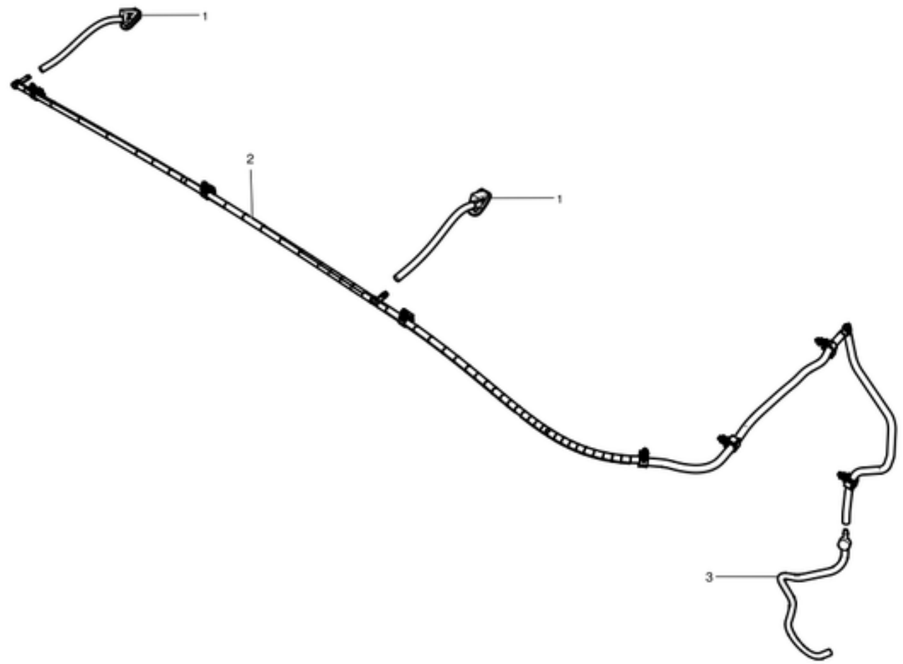

No	Part Name	Category	Part Description	Part Number	Qty	Comments
1	WASHER NOZZLE - FAN TYPE	Unrestricted	WASHER NOZZLE - FAN TYPE	1052887-00-C	2	
1	HEATED WASHER NOZZLE	Unrestricted	HEATED WASHER NOZZLE ASSEMBLY	1005404-01-E	2	
*	61 ROUND CABLE CORE ASSM - FERRITE LARGE	Unrestricted	FERRITE LARGE - 61 ROUND CABLE CORE ASSEMBLY	1038709-00-A	1	
*	STD CABLE TIE - 5.8IN	Unrestricted	STANDARD CABLE TIE - 5.8IN	1039480-00-A	2	Order in quantities of 100; minimum order: 100.
*	TESA ELECTRICAL TAPE	Unrestricted	TESA ELECTRICAL TAPE	1038765-00-A	A/N	
3	JUMPER HOSE	Unrestricted	JUMPER HOSE	1005458-00-B	1	

Windshield Wipers and Motor

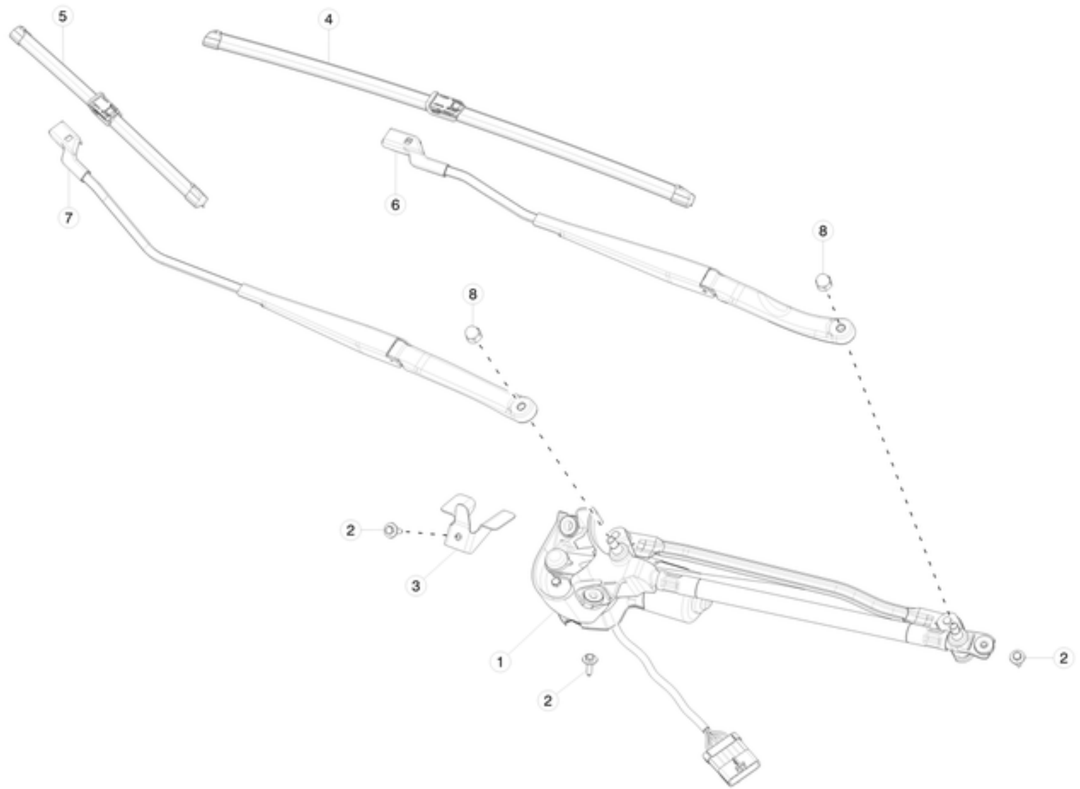

No	Part Name	Category	Part Description	Part Number	Qty	Comments
1	WIPER MODULE (Motor Assy)	Unrestricted	FRONT WIPER MODULE - LEFT HAND DRIVE	6005946-00-F	1	
2	BOLT - HEX - M6-1.0X25MM - with captive washer	Unrestricted	BOLT HEX WASHER M6-1.00x25 ZINC ALUMINUM	1006551-00-B	3	Use to install item #1.
3	WIPER MOTOR BRACKET	Unrestricted	WIPER MOUNTING BRACKET COWL PLENUM	1003249-S0-A	1	
4	BLADE ASY-WIPER LH	Unrestricted	WIPER BLADE ASSEMBLY - DRIVER SIDE - LEFT HAND DRIVE	1051495-00-A	1	
5	BLADE ASY-WIPER LHD RH	Unrestricted	WIPER BLADE, PASSENGER SIDE, LEFT HAND DRIVE	1051496-00-A	1	
6	ARM ASY - WIPER LH	Unrestricted	WIPER ARM ASSEMBLY - DRIVER SIDE - LEFT HAND DRIVE	6005951-00-C	1	
7	ARM ASY - WIPER RH	Unrestricted	WIPER ARM ASSEMBLY - PASSENGER SIDE - LEFT HAND DRIVE	6005950-00-B	1	
8	HEX NUT - WIPER ARM	Unrestricted	NUT, CAP, WASHER, BLACK M10-1.5MM, ZINC ALUMINUM	1006914-00-A	2	Order in quantities of 25; minimum order: 25.

BADGES AND FILMS

Badges

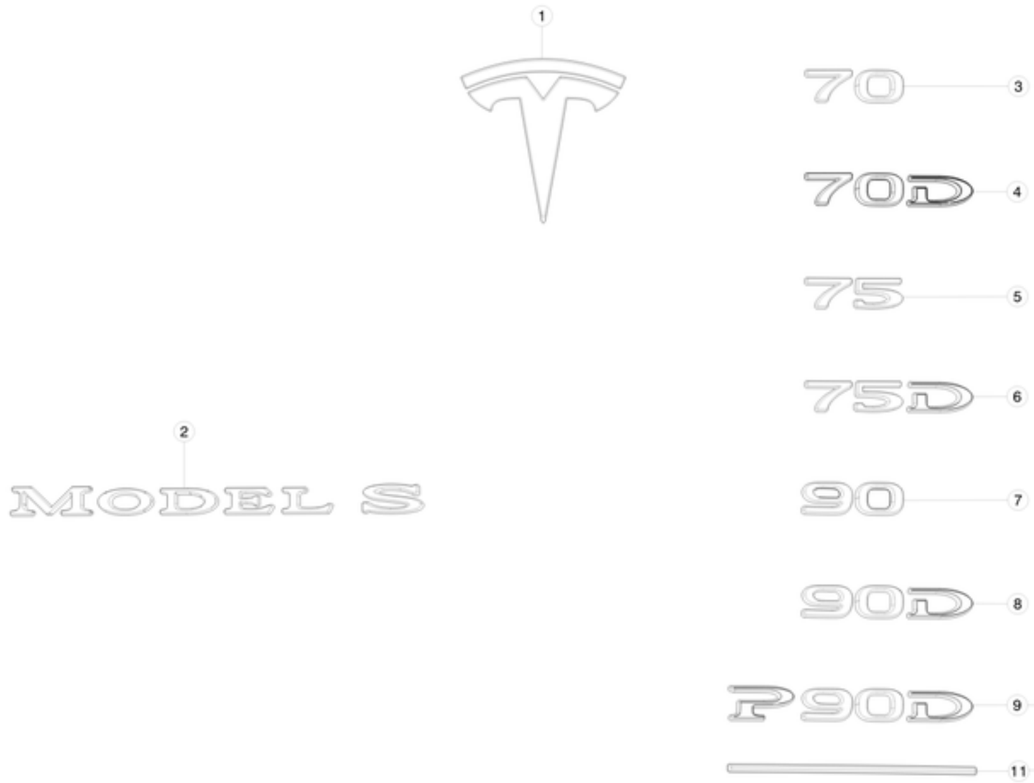

No	Part Name	Category	Part Description	Part Number	Qty	Comments
1	TESLA BADGE T - REAR	Unrestricted	TESLA BADGE T - REAR	1016365-00-B	1	
2	MODEL S BADGE	Unrestricted	MODEL S BADGE	1013738-00-C	1	
3	MODEL S 60D BADGE	Unrestricted	MODEL S 60D BADGE	1097285-00-A	1	
3	MODEL S 70 BADGE	Unrestricted	MODEL S 70 BADGE	1059217-00-A	1	For vehicles with option codes: BT70 AND DV2W; DV2W AND BTX5 AND BR02.
4	MODEL S 70D BADGE	Unrestricted	MODEL S 70D BADGE	1059208-01-A	1	For vehicles with option codes: BT70 AND DV4W; DV4W AND BTX5 AND BR02.
5	75 BADGE	Unrestricted	75 BADGE	1083137-00-B	1	For vehicles with option codes: DV2W AND BTX5 AND BR00.
6	75D BADGE	Unrestricted	75D BADGE	1083138-00-B	1	For vehicles with option codes: DV4W AND BTX5 AND BR00.
7	90 BADGE	Unrestricted	90 BADGE	1059267-00-A	1	For vehicles with option codes: BTX4 AND X025 AND DV2W.
8	90D Badge	Unrestricted	90D Badge	1059266-00-A	1	For vehicles with option codes: BTX4 AND X025 AND DV4W.
9	P90D Badge	Unrestricted	P90D Badge	1059268-00-A	1	For vehicles with option codes: BTX4 AND X024 AND DV4W AND BP00.
10	P90D LUDICROUS BADGE	Unrestricted	P90D LUDICROUS BADGE	1068008-00-A	1	For vehicles with option codes: BTX4 AND X024 AND DV4W AND BP01.
*	MODEL X/S 100D BADGE	Unrestricted	MODEL X/S 100D BADGE	1066305-00-A	1	For vehicles with option codes: DV4W AND X025 AND BTX6 AND X028.
*	MODEL X/S P100D LUDICROUS BADGE	Unrestricted	MODEL X/S P100D LUDICROUS BADGE	1083672-00-A	1	For vehicles with option codes: BTX6 AND DV4W AND X024 AND BP01 AND X028.
11	LUDICROUS CHROME BAR	Unrestricted	LUDICROUS CHROME BAR	1067217-00-B	1	For 85kWh and 90kWh vehicles with Ludicrous upgrade.

EXTERIOR MIRRORS

Exterior Mirrors

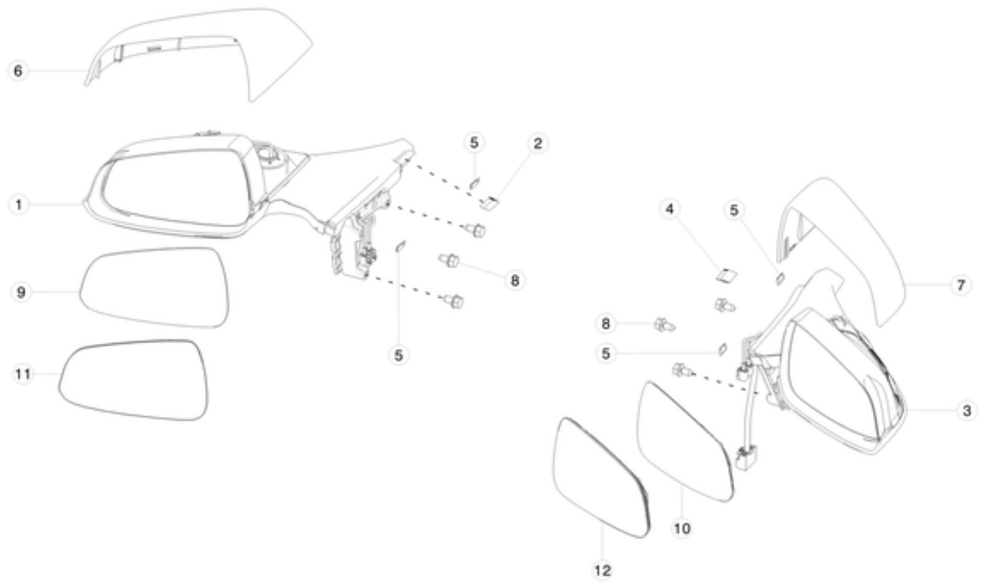

No	Part Name	Category	Part Description	Part Number	Qty	Comments
1	MS EXT MIRROR ASY, BASE, DOMESTIC, LH	Unrestricted	MODEL S EXTERIOR MIRROR ASSEMBLY, BASE, DOMESTIC, LEFT	1041315-00-B	1	
1	MS EXT MIRROR ASY, PREMIUM, DOMESTIC, LH	Unrestricted	MODEL S EXTERIOR MIRROR ASSEMBLY, PREMIUM, DOMESTIC, LEFT	1041317-00-F	1	
2	NVH FOAM, EXT MIRROR, LH	Unrestricted	NOISE VIBRATION HARSHNESS FOAM, EXTERIOR MIRROR, LEFT	1022111-00-A	1	
3	MS EXT MIRROR ASY, BASE, DOMESTIC, RH	Unrestricted	MODEL S EXTERIOR MIRROR ASSEMBLY, BASE, DOMESTIC, RIGHT	1041316-00-B	1	
3	MS EXT MIRROR ASY, PREMIUM, DOMESTIC, RH	Unrestricted	MODEL S EXTERIOR MIRROR ASSEMBLY, PREMIUM, DOMESTIC, RIGHT	1041318-00-F	1	
4	NVH FOAM, EXT MIRROR, RH	Unrestricted	NOISE VIBRATION HARSHNESS FOAM, EXTERIOR MIRROR, RIGHT	1022112-00-A	1	
5	SHIM, NYLON, ADHESIVE BACKED	Unrestricted	SHIM, NYLON, ADHESIVE BACKED	1026519-00-A	4	Order in quantities of 10; minimum order: 10.
6	EXTERIOR MIRROR SKULL CAP LH	Unrestricted	EXTERIOR MIRROR COVER LEFT	1010102-00-A	1	
7	EXTERIOR MIRROR SKULL CAP RH	Unrestricted	EXTERIOR MIRROR COVER RIGHT	1010104-00-A	1	
8	BLT HF M8-1.25x16 TLOB ZnAl	Unrestricted	BOLT M8-1.25x16 ZINC ALUMINUM	1006507-00-A	6	
9	MS EXT MIRROR GLASS ONLY,BASE,DOM,LH	Unrestricted	EXTERIOR MIRROR GLASS ONLY,BASE,DOMESTIC, LEFT	1042523-00-A	1	
10	MS EXT MIRROR GLASS ONLY,BASE,DOM,RH	Unrestricted	EXTERIOR MIRROR GLASS ONLY, BASE, DOMESTIC, RIGHT	1042524-00-A	1	
11	MS EXT MIRROR GLASS ONLY,PREM,DOM,LH	Unrestricted	EXTERIOR MIRROR GLASS ONLY, PREMIUM, DOMESTIC, LEFT	1042525-00-A	1	

12	MS EXT MIRROR GLASS ONLY,PREM,DOM,RH	Unrestricted	EXTERIOR MIRROR GLASS ONLY, PREMIUM, DOMESTIC, RIGHT	1042528-00-A	1	

EXTERIOR TRIM

Exterior Trim Fittings

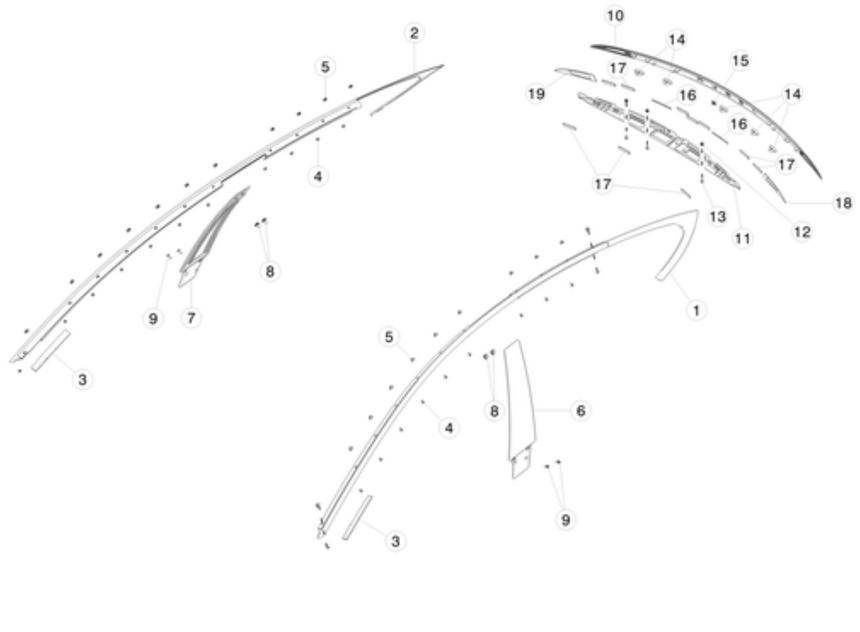

No	Part Name	Category	Part Description	Part Number	Qty	Comments
1	ASY-BRIGHT MOLDING - BODY SIDE - LH	Unrestricted	BRIGHT MOLDING, BODY SIDE, LEFT	1039307-00-A	1	For cars before 5/11/17 will fit with quarter glass 1051820-99-A or earlier.
2	ASY-BRIGHT MOLDING - BODY SIDE - RH	Unrestricted	BRIGHT MOLDING, BODY SIDE, RIGHT	1039308-00-A	1	For cars before 5/11/17 will fit with quarter glass 1051821-99-A or earlier.
1	ASY_MS PLASTIC BRIGHT MOLDING, LH COMP	Unrestricted	ASY_MS PLASTIC BRIGHT MOLDING, LH COMP	1077351-00-C	1	For cars on or after 5/11/17,will fit with the newer quarter glass 1051820-70-D or later
2	ASY_MS PLASTIC BRIGHT MOLDING, RH COMP	Unrestricted	ASY_MS PLASTIC BRIGHT MOLDING, RH COMP	1079448-00-C	1	For cars on or after 5/11/17,will fit with the newer quarter glass 1051821-80-D or later
3	FOAM TAPE, V710	Unrestricted	FOAM TAPE, V710	1026820-00-A	400mm	22860mm/roll
4	SCR DUAL LEAD 4.8-1.59x9 [8.8]	Unrestricted	SCREW DUAL LEAD 4.8-1.59x9	1022798-00-A	24	Use to install items #1 and 2.
5	GROMMET - UPPER SEAL CARRIER	Unrestricted	GROMMET - UPPER SEAL CARRIER	1005220-00-C	24	Use to install items #1 and 2. Order in quantities of 100; minimum order: 100.
6	ASY - B PILLAR APPLIQUE LH	Unrestricted	B-PILLAR APPLIQUE LEFT	1004534-00-B	1	Use only on vehicles manufactured before October 12, 2016
6	ASY - B PILLAR APPLIQUE, AP-HW2, LH	Unrestricted	B-PILLAR APPLIQUE LEFT, AUTOPILOT	1092306-00-C	1	For vehicles manufactured between 10/12/16 and 8/24/17, Option code: APH2
6	ASY - B PILLAR APPLIQUE, AP-HW2, LH	Unrestricted	B-PILLAR APPLIQUE LEFT, AUTOPILOT	1092306-00-E	1	For vehicles manufactured on or after August 24th, 2017, Option code: APH3
7	ASY - B PILLAR APPLIQUE RH	Unrestricted	B-PILLAR APPLIQUE RIGHT	1004535-00-B	1	Use only on vehicles manufactured before October 12, 2016
7	ASY - B PILLAR APPLIQUE, AP-HW2, RH	Unrestricted	B-PILLAR APPLIQUE RIGHT, AUTOPILOT	1092307-00-C	1	For vehicles manufactured between 10/12/16 and 8/24/17, Option code: APH2
7	ASY - B PILLAR APPLIQUE, AP-HW2, RH	Unrestricted	B-PILLAR APPLIQUE RIGHT, AUTOPILOT	1092307-00-E	1	For vehicles manufactured on or after August 24th, 2017, Option code: APH3
8	CLIP, TRIM, W/SEAL, 0.7-1.6, OD 8.5	Unrestricted	CLIP, TRIM, WITH SEAL	1009769-00-A	4	Use to install items #3 and 4.

9	BLT,PFLG,TRX,M5x25[08.8]-05	Unrestricted	BOLT, TORX, M5x25	1008884-00-C	4	Use to install items #3 and 4.
10	LIFTGATE APPLIQUE ASSEMBLY	Unrestricted	LIFTGATE APPLIQUE ASSEMBLY	1026649-00-D	1	
11	BRACKET, LIFTGATE APPLIQUE	Unrestricted	LIFTGATE APPLIQUE BRACKET	1011685-01-B	1	
12	GROM, SCR, M5 SELF TAP, 0.8-2.5	Unrestricted	GROMMET, SCREW, M5 SELF-TAPPING	1003209-00-A	3	Use to install liftgate applique. Order in quantities of 100; minimum order: 100.
13	SCR,M5x10,PT,TORX,ST,ZnAl with washer head	Unrestricted	SCREW, M5x10, TORX, ZINC ALUMINUM	1008630-00-A	3	Use to install liftgate applique.
14	CLIP, LIFTGATE APPLIQUE	Unrestricted	CLIP, LIFTGATE APPLIQUE	1011686-00-A	5	Use to install liftgate applique.
15	CLIP, BRKT, LIFTGATE APPLIQUE	Unrestricted	CLIP, BRACKET, LIFTGATE APPLIQUE	1011695-00-A	1	Use to install liftgate applique. Order in quantities of 50; minimum order: 50.
16	APPLIQUE TAPE, 5X90MM	Unrestricted	APPLIQUE TAPE, 5X90MM	1020987-00-A	2	Use to install liftgate applique bracket as needed.
17	APPLIQUE TAPE, 12X55MM	Unrestricted	APPLIQUE TAPE, 12X55MM	1020988-00-A	10	Use to install liftgate applique bracket as needed.
18	APPLIQUE TAPE, LH	Unrestricted	APPLIQUE TAPE, LH	1021607-00-B	1	Use to install liftgate applique bracket as needed.
19	APPLIQUE TAPE, RH	Unrestricted	APPLIQUE TAPE, RH	1021608-00-B	1	Use to install liftgate applique bracket as replacement.
*	LOCTITE 5510, CLEAR - SERVICE 300ML BOTTLE	Unrestricted	LOCTITE 5510, CLEAR - SERVICE - 300ML BOTTLE	1031124-00-A	**	

LICENSE PLATE MOUNTING

License Plate Mounting - Australia

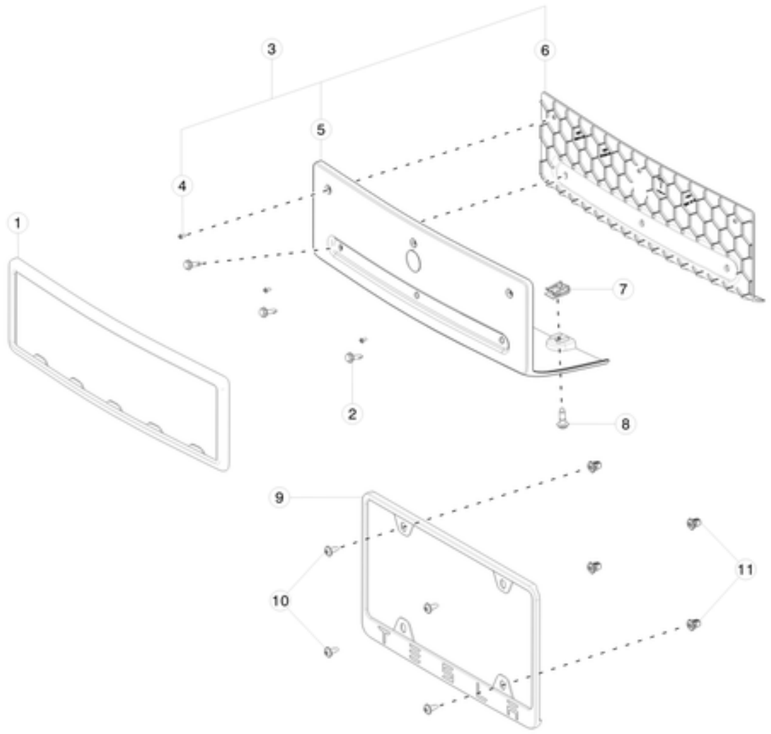

No	Part Name	Category	Part Description	Part Number	Qty	Comments
1	LICENSE PLATE BRACKET FRAME, AU, MS2	Unrestricted	LICENSE PLATE BRACKET FRAME, AU, MS2	1063937-00-B	1	
2	SCR,4.8x16,HH,K,SELF-DRILL,STL,ZNNI,BLCK	Unrestricted	SCR,4.8x16,HH,K,SELF-DRILL,STL,ZNNI,BLCK	1073408-00-B	3	
3	MS2 FR LICENSE PLT BRACKET AUS SUB-ASSY	Unrestricted	MS2 FR LICENSE PLT BRACKET AUS SUB-ASSY	1081883-00-A	1	
4	SCR,25x6,PAN,TORX, DELTA PT	Unrestricted	SCR,25x6,PAN,TORX, DELTA PT	1057876-00-B	3	
5	LICENSE PLATE BRACKET SHELL, AU, MS2	Unrestricted	LICENSE PLATE BRACKET SHELL, AU, MS2	1063936-00-C	1	
6	LICENSE PLATE BACK PLATE, AU, MS2	Unrestricted	LICENSE PLATE BACK PLATE, AU, MS2	1071268-00-B	1	
7	CLIP, M6,BUR100015	Unrestricted	CLIP, M6,BUR100015	1013802-00-B	2	
8	BOLT M6x15 PC109 MAT TAMPERPROOF	Unrestricted	BOLT M6x15 PC109 MAT TAMPERPROOF	1055832-00-B	2	
*	ASSEMBLY, BAG, FRONT LICENSE PLATE FASTENERS - EU AND AUSTRALIA	Unrestricted	ASSEMBLY, BAG, FRONT LICENSE PLATE FASTENERS - EU AND AUSTRALIA	1083669-00-A	1	
9	TESLA LICENSE PLATE FRAME, REAR	Unrestricted	TESLA LICENSE PLATE FRAME, REAR	1028519-00-A	1	
9	AWD LICENSE PLATE FRAME, REAR	Unrestricted	AWD LICENSE PLATE FRAME, REAR	1028519-01-A	1	
10	SCR,TPG,5xPT-12[St],ZnNi BLK-R	Unrestricted	SCR,TPG,5xPT-12[St],ZnNi BLK-R	1019047-00-C	4	
11	GROM, SCR, M5 SELF TAP, 0.8-2.5, 7MM SQ	Unrestricted	GROM, SCR, M5 SELF TAP, 0.8-2.5, 7MM SQ	1003209-00-A	1	

*	LICENSE PLATE FRAME HARDWARE CAP	Unrestricted	LICENSE PLATE FRAME HARDWARE CAP	1025729-00-A	2	
*	LICENSE PLATE FLASHER CARD - ZERO EMISSIONS	Unrestricted	LICENSE PLATE FLASHER CARD - ZERO EMISSIONS	1066222-00-A	2	

License Plate Mounting - China

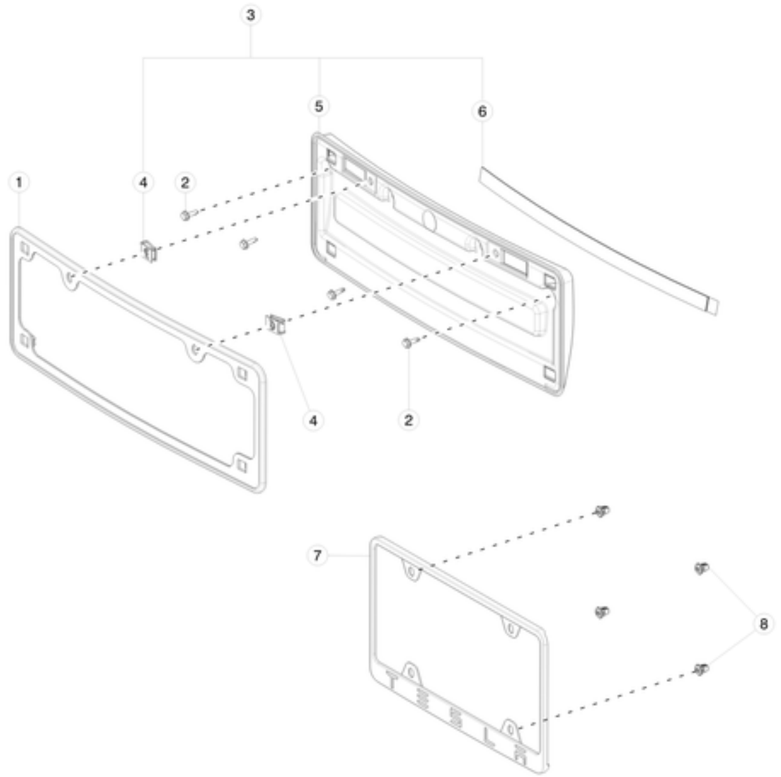

No	Part Name	Category	Part Description	Part Number	Qty	Comments
1	LICENSE PLATE BRACKET FRAME, CN, MS2	Unrestricted	LICENSE PLATE BRACKET FRAME, CN, MS2	1062795-00-B	1	
2	SCR,4.8x16,HH,K,SELF-DRILL,STL,ZNNI,BLCK	Unrestricted	SCR,4.8x16,HH,K,SELF-DRILL,STL,ZNNI,BLCK	1073408-00-B	4	
3	MS2 FR LICENSE PLATE BRACKET CN SUB-ASSy	Unrestricted	MS2 FR LICENSE PLATE BRACKET CN SUB-ASSy	1081877-00-A	1	
4	CLIP, M6,BUR100015	Unrestricted	CLIP, M6,BUR100015	1013802-00-B	2	
5	LICENSE PLATE BRACKET SHELL, CN, MS2	Unrestricted	LICENSE PLATE BRACKET SHELL, CN, MS2	1062794-00-C	1	
6	CH LICENSE PLATE BRACKET TAPE MS2	Unrestricted	CH LICENSE PLATE BRACKET TAPE MS2	1071556-00-B	1	
7	TESLA LICENSE PLATE FRAME, REAR	Unrestricted	TESLA LICENSE PLATE FRAME, REAR	1028519-00-A	1	
7	AWD LICENSE PLATE FRAME, REAR	Unrestricted	AWD LICENSE PLATE FRAME, REAR	1028519-01-A	1	
8	GROM, SCR, M5 SELF TAP, 0.8-2.5, 7MM SQ	Unrestricted	GROM, SCR, M5 SELF TAP, 0.8-2.5, 7MM SQ	1003209-00-A	4	
*	LICENSE PLATE FRAME HARDWARE CAP	Unrestricted	LICENSE PLATE FRAME HARDWARE CAP	1025729-00-A	2	
*	LICENSE PLATE FLASHER CARD - ZERO EMISSIONS	Unrestricted	LICENSE PLATE FLASHER CARD - ZERO EMISSIONS	1066222-00-A	2	

License Plate Mounting - Europe

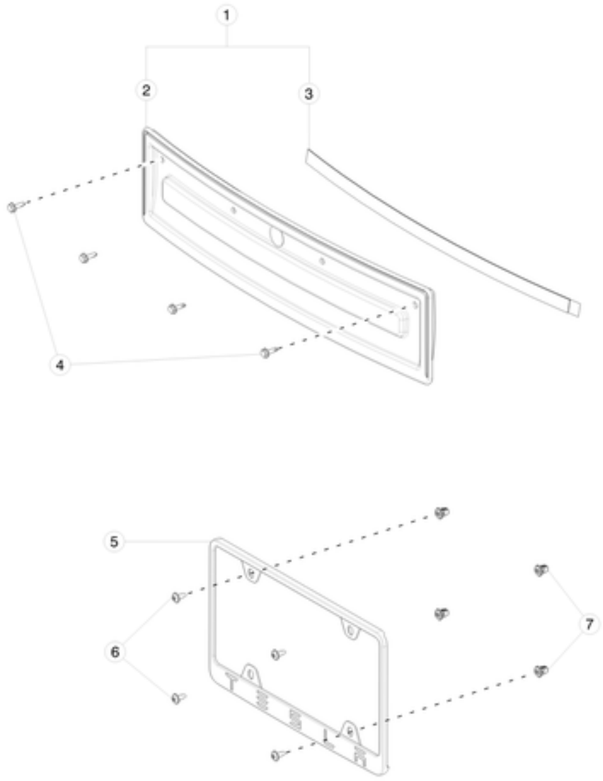

No	Part Name	Category	Part Description	Part Number	Qty	Comments
1	MS2 EU LICENSE PLATE BRACKET SUB-ASSY	Unrestricted	MS2 EU LICENSE PLATE BRACKET SUB-ASSY	1081876-00-A	1	
2	FR License Plate Bracket, EU MS2	Unrestricted	FR License Plate Bracket, EU MS2	1060108-00-B	1	
3	EU License Plate Bracket Tape, MS2	Unrestricted	EU License Plate Bracket Tape, MS2	1071555-00-B	1	
4	SCR,4.8x16,HH,K,SELF-DRILL,STL,ZNNI,BLCK	Unrestricted	SCR,4.8x16,HH,K,SELF-DRILL,STL,ZNNI,BLCK	1073408-00-B	4	
*	ASSEMBLY, BAG, FRONT LICENSE PLATE FASTENERS - EU AND AUSTRALIA	Unrestricted	ASSEMBLY, BAG, FRONT LICENSE PLATE FASTENERS - EU AND AUSTRALIA	1083669-00-A	1	
5	TESLA LICENSE PLATE FRAME, REAR	Unrestricted	TESLA LICENSE PLATE FRAME, REAR	1028519-00-A	1	
5	AWD LICENSE PLATE FRAME, REAR	Unrestricted	AWD LICENSE PLATE FRAME, REAR	1028519-01-A	1	
6	SCR,TPG,5xPT-12[St],ZnNi BLK-R	Unrestricted	SCR,TPG,5xPT-12[St],ZnNi BLK-R	1019047-00-C	4	
7	GROM, SCR, M5 SELF TAP, 0.8-2.5, 7MM SQ	Unrestricted	GROM, SCR, M5 SELF TAP, 0.8-2.5, 7MM SQ	1003209-00-A	4	
*	LICENSE PLATE FRAME HARDWARE CAP	Unrestricted	LICENSE PLATE FRAME HARDWARE CAP	1025729-00-A	2	
*	LICENSE PLATE FLASHER CARD - ZERO EMISSIONS	Unrestricted	LICENSE PLATE FLASHER CARD - ZERO EMISSIONS	1066222-00-A	2	

License Plate Mounting - Japan

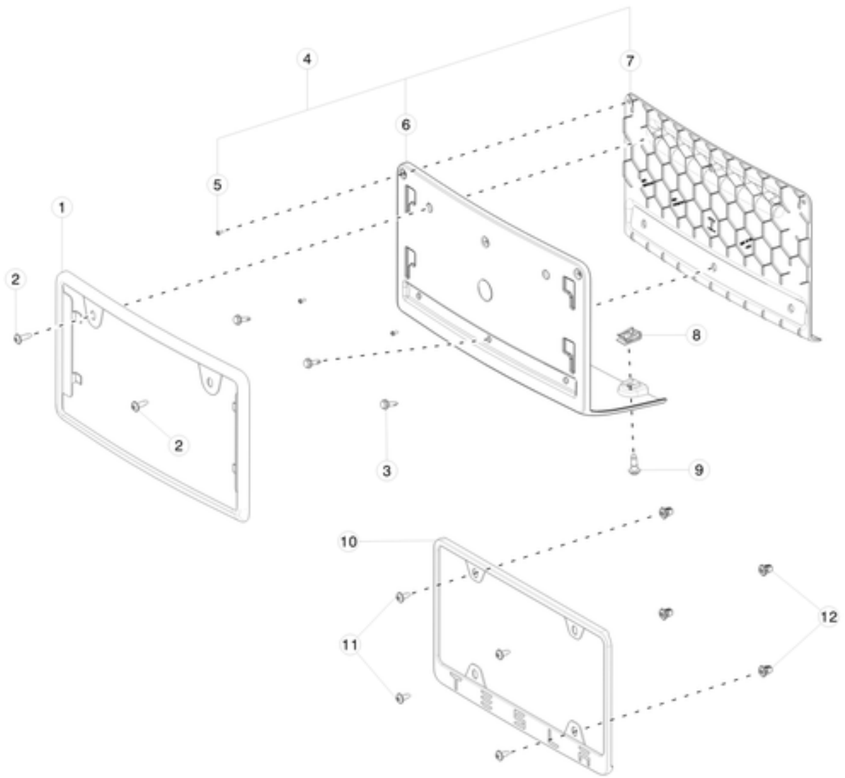

No	Part Name	Category	Part Description	Part Number	Qty	Comments
1	LICENSE PLATE BRACKET FRAME, JP, MS2	Unrestricted	LICENSE PLATE BRACKET FRAME, JP, MS2	1063935-00-C	1	
2	ASY BAG FR LICENSE PLATE FASTENERS NA-JP	Unrestricted	ASY BAG FR LICENSE PLATE FASTENERS NA-JP	1019229-00-E	1	contains quantity 4 1024678-00-A screws
3	SCR,4.8x16,HH,K,SELF-DRILL,STL,ZNNI,BLCK	Unrestricted	SCR,4.8x16,HH,K,SELF-DRILL,STL,ZNNI,BLCK	1073408-00-B	3	
4	MS2 FR LICENSE PLATE BRACKET JP SUB-ASSY	Unrestricted	MS2 FR LICENSE PLATE BRACKET JP SUB-ASSY	1081880-00-A	1	
5	SCR,25x6,PAN,TORX, DELTA PT	Unrestricted	SCR,25x6,PAN,TORX, DELTA PT	1057876-00-B	3	
6	LICENSE PLATE BRACKET SHELL, JP, MS2	Unrestricted	LICENSE PLATE BRACKET SHELL, JP, MS2	1063934-00-C	1	
7	FR LICENSE PLATE BACKPLATE MS2	Unrestricted	FR LICENSE PLATE BACKPLATE MS2	1071286-00-C	1	
8	CLIP, M6,BUR100015	Unrestricted	CLIP, M6,BUR100015	1013802-00-B	2	
9	BOLT M6x15 PC109 MAT TAMPERPROOF	Unrestricted	BOLT M6x15 PC109 MAT TAMPERPROOF	1055832-00-B	2	
*	ASY, BAG, LICENSE PLATE FASTENERS	Unrestricted	BAG, LICENSE PLATE FASTENERS	1019229-00-E	1	
10	TESLA LICENSE PLATE FRAME, REAR	Unrestricted	TESLA LICENSE PLATE FRAME, REAR	1028519-00-A	1	
10	AWD LICENSE PLATE FRAME, REAR	Unrestricted	AWD LICENSE PLATE FRAME, REAR	1028519-01-A	1	
11	SCR,TPG,5xPT-12[St],ZnNi BLK-R	Unrestricted	SCR,TPG,5xPT-12[St],ZnNi BLK-R	1019047-00-C	4	
12	GROM, SCR, M5 SELF TAP, 0.8-2.5, 7MM SQ	Unrestricted	GROM, SCR, M5 SELF TAP, 0.8-2.5, 7MM SQ	1003209-00-A	1	
*	LICENSE PLATE FRAME HARDWARE CAP	Unrestricted	LICENSE PLATE FRAME HARDWARE CAP	1025729-00-A	2	

*	LICENSE PLATE FLASHER CARD - ZERO EMISSIONS	Unrestricted	LICENSE PLATE FLASHER CARD - ZERO EMISSIONS	1066222-00-A	2	

License Plate Mounting - North America

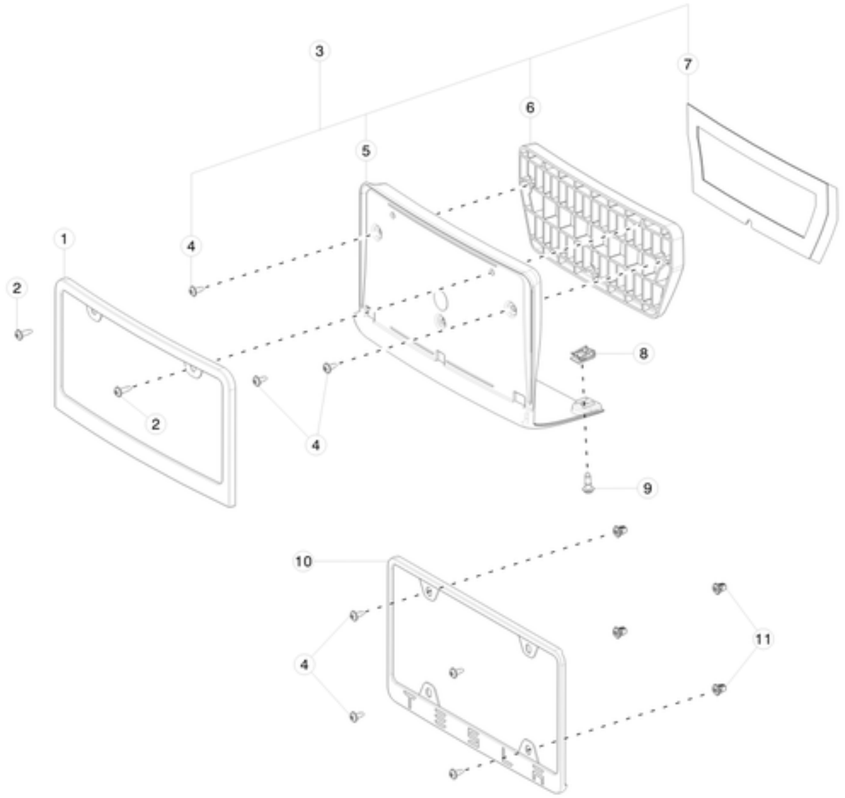

No	Part Name	Category	Part Description	Part Number	Qty	Comments
1	LICENSE PLATE BRACKET FRAME, NA, MS2	Unrestricted	LICENSE PLATE BRACKET FRAME, NA, MS2	1061913-00-C	1	
2	ASY BAG FR LICENSE PLATE FASTENERS NA-JP	Unrestricted	ASY BAG FR LICENSE PLATE FASTENERS NA-JP	1019229-00-E	1	contains quantity 4 1024678-00-A screws
3	MS2 NA LICENSE PLATE BRACKET SUB-ASSY	Unrestricted	MS2 NA LICENSE PLATE BRACKET SUB-ASSY	1081875-00-A	1	
4	SCR,TPG,5xPT-12[St],ZnNi BLK-R	Unrestricted	SCR,TPG,5xPT-12[St],ZnNi BLK-R	1019047-00-C	7	
5	LICENSE PLATE BRACKET SHELL, NA, MS2	Unrestricted	LICENSE PLATE BRACKET SHELL, NA, MS2 - Unpainted	1061911-00-B	1	
6	LICENSE PLATE BRKT STRUCTUAL BASE NA MS2	Unrestricted	LICENSE PLATE BRKT STRUCTUAL BASE NA MS2	1061912-00-C	1	
7	NA LIC PLATE BRKT STRUCT BASE TAPE MS2	Unrestricted	NA LIC PLATE BRKT STRUCT BASE TAPE MS2	1071549-00-B	1	
8	CLIP, M6,BUR100015	Unrestricted	CLIP, M6,BUR100015	1013802-00-B	2	
9	BOLT M6x15 PC109 MAT TAMPERPROOF	Unrestricted	BOLT M6x15 PC109 MAT TAMPERPROOF	1055832-00-B	2	
*	ASY, BAG, LICENSE PLATE FASTENERS	Unrestricted	BAG, LICENSE PLATE FASTENERS	1019229-00-E	1	
10	TESLA LICENSE PLATE FRAME, REAR	Unrestricted	TESLA LICENSE PLATE FRAME, REAR	1028519-00-A	1	
10	AWD LICENSE PLATE FRAME, REAR	Unrestricted	AWD LICENSE PLATE FRAME, REAR	1028519-01-A	1	
11	GROM, SCR, M5 SELF TAP, 0.8-2.5, 7MM SQ	Unrestricted	GROM, SCR, M5 SELF TAP, 0.8-2.5, 7MM SQ	1003209-00-A	4	
*	LICENSE PLATE FRAME HARDWARE CAP	Unrestricted	LICENSE PLATE FRAME HARDWARE CAP	1025729-00-A	2	

*	LICENSE PLATE FLASHER CARD - ZERO EMISSIONS	Unrestricted	LICENSE PLATE FLASHER CARD - ZERO EMISSIONS	1066222-00-A	2	

UNDERHOOD TRIM

Underhood Trim

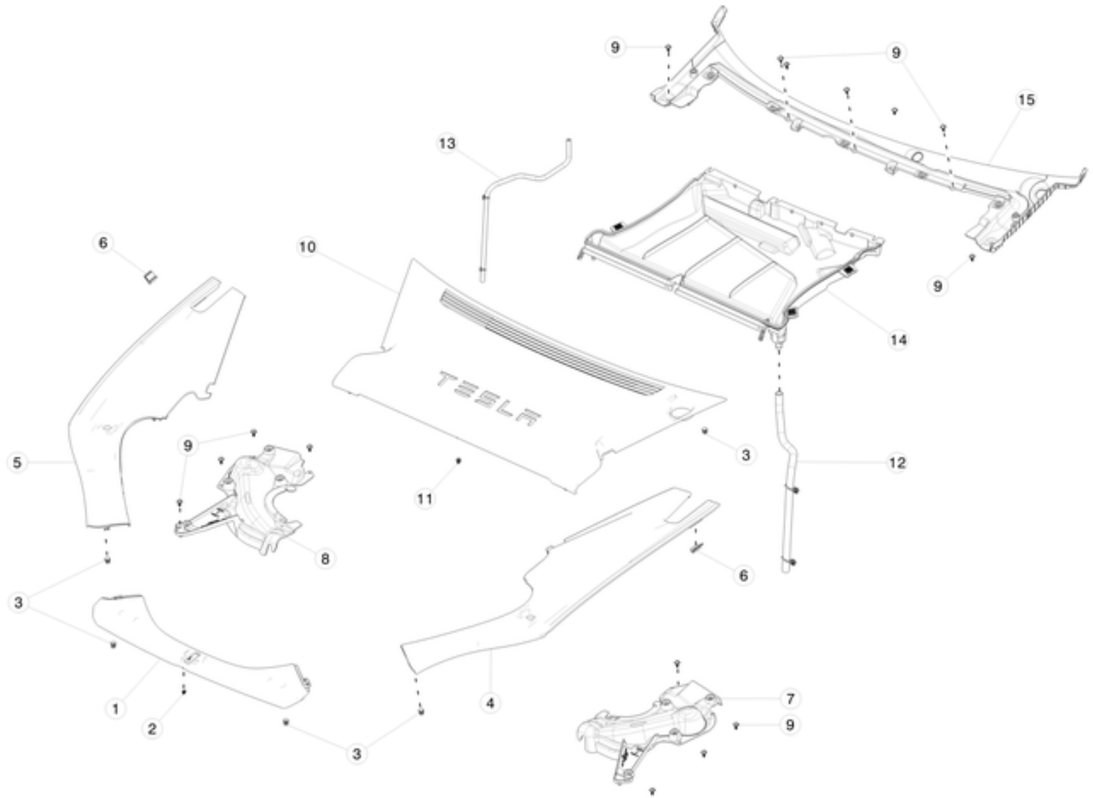

No	Part Name	Category	Part Description	Part Number	Qty	Comments
1	FRONT APRON ASSEMBLY MS2	Unrestricted	FRONT APRON ASSEMBLY	1060474-00-D	1	
2	CLIP, U-BELL, 5.8 X 1.5-3.5	Unrestricted	CLIP, U-BELL, 5.8 X 1.5-3.5	1008245-00-A	1	
3	TRIM CLIP 8X2.5	Unrestricted	TRIM CLIP 8X2.5	1038222-00-A	31	
4	APRON ASSEMBLY LEFT MS2	Unrestricted	APRON ASSEMBLY LEFT	1060477-00-B	1	
5	APRON ASSEMBLY RIGHT MS2	Unrestricted	APRON ASSEMBLY RIGHT	1060479-00-B	1	
6	CLIP, UNDERHOOD APRON TO FENDER	Unrestricted	CLIP, UNDERHOOD APRON TO FENDER	1012944-00-D	2	
7	SHOCK TOWER COVER LH MS2	Unrestricted	SHOCK TOWER COVER LEFT	1060511-00-B	1	
8	SHOCK TOWER COVER RH MS2	Unrestricted	SHOCK TOWER COVER RIGHT	1060510-00-B	1	
9	RVT PUSH-PULL 8X18X20.0	Unrestricted	RVT PUSH-PULL 8X18X20.0	1006521-00-A	15	
10	REAR APRON ASSEMBLY - LHD	Unrestricted	REAR APRON ASSEMBLY - LHD	1060481-00-C	1	
11	ERGO CLIP, 2.5-3 PNL,12W,16L,169 coating	Unrestricted	ERGO CLIP, 2.5-3 PNL,12W,16L,169 coating	1007818-00-B	1	
12	PRIMARY DRAIN TUBE MS2 LHD	Unrestricted	PRIMARY DRAIN TUBE MS2 LHD	1060472-00-B	1	
13	SECONDARY DRAIN TUBE MS2 LHD	Unrestricted	SECONDARY DRAIN TUBE MS2 LHD	1068141-00-B	1	
14	CABIN INTAKE DUCT ASSEMBLY MS2 LHD	Unrestricted	CABIN INTAKE DUCT ASSEMBLY MS2 LHD	1060466-00-B	1	

15	COWL SCREEN MS2 LHD	Unrestricted	COWL SCREEN LHD	1060509-00-B	1	

UNDERTRAY AND DIFFUSER

Front Undertray

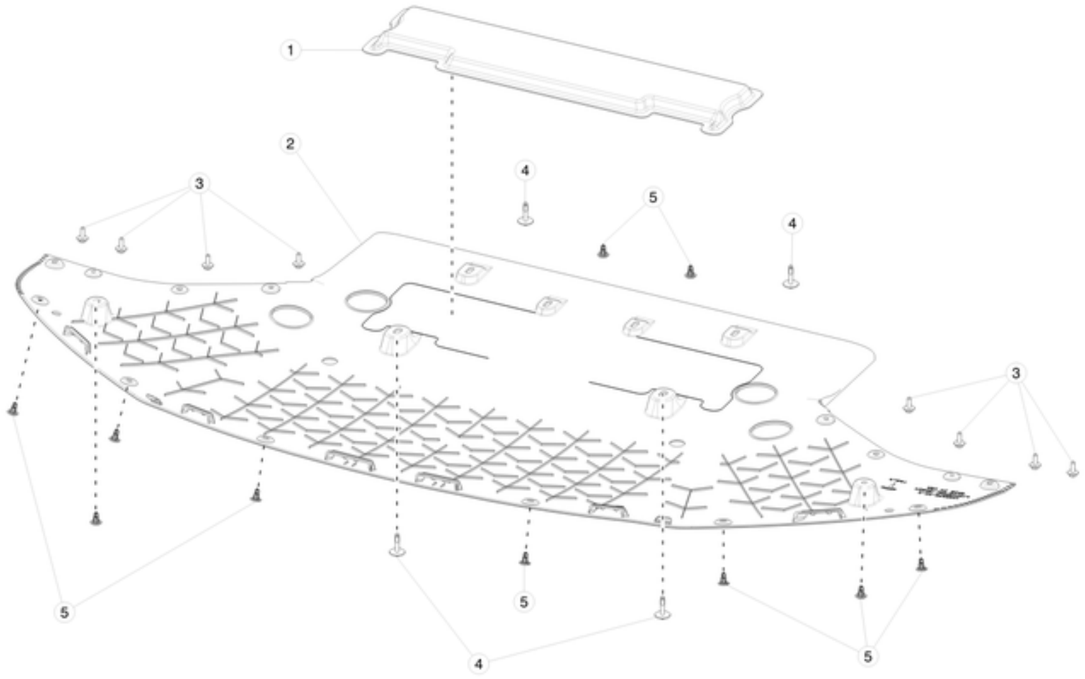

No	Part Name	Category	Part Description	Part Number	Qty	Comments
1	ABSORBER AERO SHIELD FRONT, DM	Unrestricted	ABSORBER AERO SHIELD FRONT, DM	1050484-00-B	1	
2	LWR valance, FR FASCIA MS2	Unrestricted	LWR valance, FR FASCIA MS2	1056376-00-C	1	
3	SCR HEX HEAD M6X20 ZnAl	Unrestricted	SCR HEX HEAD M6X20 ZnAl	1010261-00-A	2	
4	BLT,HEX,M6-1.00x30[8.8]-S-M-09	Unrestricted	BLT,HEX,M6-1.00x30[8.8]-S-M-09	1022543-00-B	4	
5	RVT PUSH PULL 10X22X29	Unrestricted	RIVET PUSH PULL 10X22X29	1015755-00-A	2	Order in quantities of 50; minimum order: 50.

Rear Undertray and Diffuser

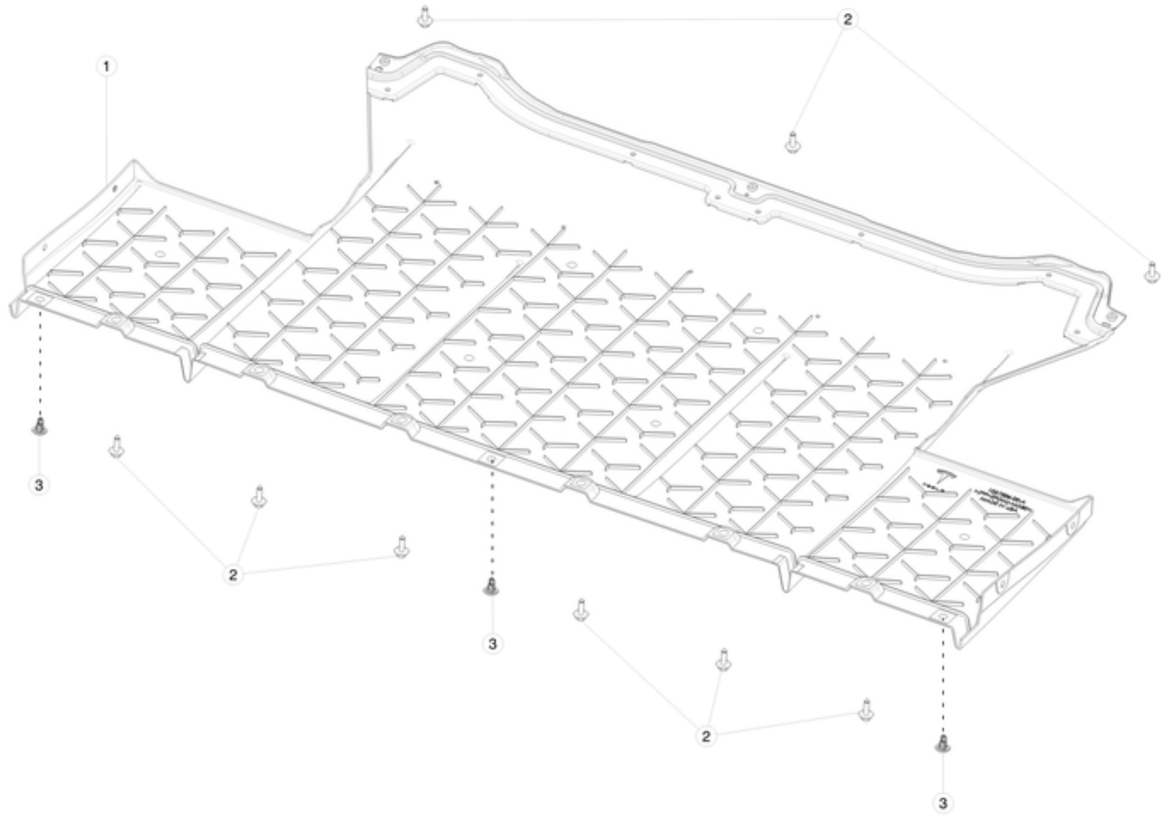

No	Part Name	Category	Part Description	Part Number	Qty	Comments
1	AERO SHIELD, MID, MS2	Unrestricted	MID AERO SHIELD	1057326-00-B	1	
1	AERO SHIELD, MID, MS2	Unrestricted	MID AERO SHIELD	1057326-00-C	1	For use on vehicles manufactured on or after November 23, 2016.
2	BLT HF M6x1.00x18 [8.8]-D-ZnAl-W	Unrestricted	BLT HF M6x1.00x18 [8.8]-D-ZnAl-W	1006529-00-A	1	
3	RVT PUSH-PULL 8X18X20.0	Unrestricted	RVT PUSH-PULL 8X18X20.0	1006521-00-A	1	

WHEEL ARCH LINERS

Motor Bay Absorber

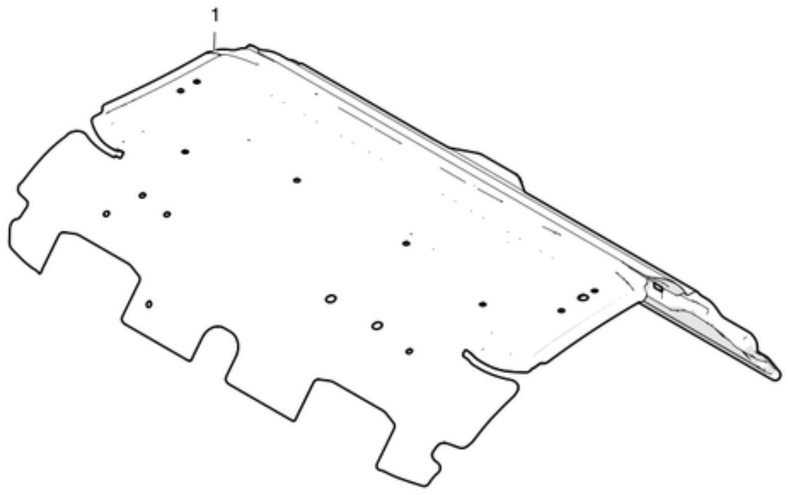

No	Part Name	Category	Part Description	Part Number	Qty	Comments
1	MOTOR COVER ABSORBER	Unrestricted	MOTOR COVER ABSORBER, OUTER	1042781-00-C	1	
*	FRONT MOTOR BAY OUTER ABSORBER, DM	Unrestricted	FRONT MOTOR BAY OUTER ABSORBER, WITH DUAL MOTOR	1032644-00-D	1	
2	NUT,t5,HF,PLASTIC,THREADED	Unrestricted	NUT, PLASTIC,THREADED	1013805-00-A	6	
3	ABSORBER FRUNK, DM	Unrestricted	FRONT TRUNK ABSORBER - DUAL MOTOR	1050480-00-B	1	

Wheel Arch Liners

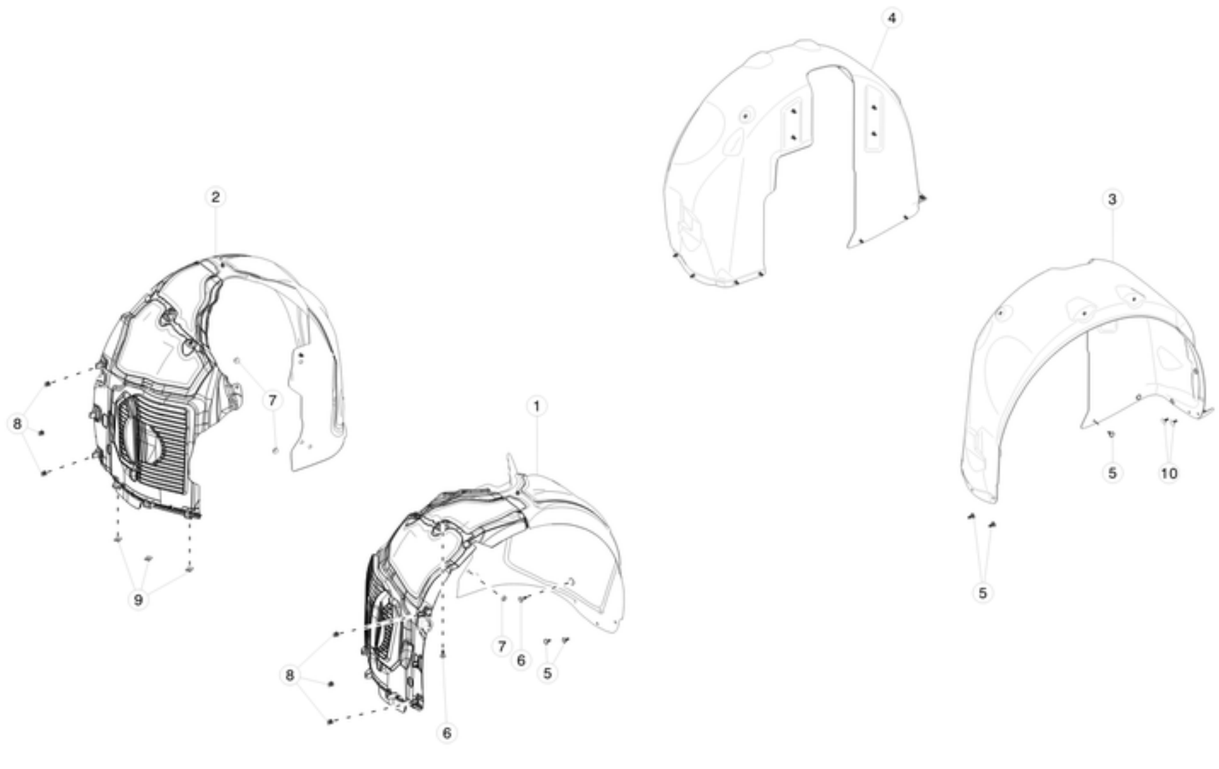

No	Part Name	Category	Part Description	Part Number	Qty	Comments
1	LOUVRE ASSY, LH, WHEEL LINER	Unrestricted	LOUVRE ASSEMBLY, LEFT, WHEEL LINER	1063693-00-C	1	OK to use and replace 1063693-00-A or -B.
2	LOUVRE ASSY, RH, WHEEL LINER	Unrestricted	LOUVRE ASSEMBLY, RIGHT, WHEEL LINER	1063694-00-C	1	OK to use and replace 1063694-00-A or -B
3	ASY, LINER WHEELHOUSE RR LH, MS2	Unrestricted	LINER-WHEELHOUSE ASSEMBLY - REAR LEFT	1067006-00-A	1	
3	ASY, LINER WHEELHOUSE RR LH, MS2	Unrestricted	LINER-WHEELHOUSE ASSEMBLY - REAR LEFT	1067006-00-B	1	
4	ASY, LINER WHEELHOUSE RR RH	Unrestricted	LINER-WHEELHOUSE ASSEMBLY - REAR RIGHT	1067007-00-B	1	
5	RVT PUSH-PULL 8X18X20.0	Unrestricted	RIVET PUSH-PULL 8X18X20.0	1006521-00-A	38	Order in quantities of 50; minimum order: 50.
6	RVT PUSH-PULL 8X18X28.5	Unrestricted	RIVET PUSH-PULL 8X18X28.5	1006535-00-A	4	Order in quantities of 50; minimum order: 50.
7	NUT HEX M6-1.00 8 ZnAl 18 KEPS	Unrestricted	NUT HEX M6-1.00 ZINC ALUMINUM	1005822-00-A	4	
8	ERGO CLIP, 2.5-3 PNL,12W,16L,169 coating	Unrestricted	ERGO CLIP, 2.5-3 PNL,12W,16L,169 coating	1007818-00-B	4	
9	U-NUT M6x0.6-3.5	Unrestricted	U-NUT M6x0.6-3.5	1006518-00-A	4	Order in quantities of 50; minimum order: 50.
10	CLIP, BRUSH, 7MM, 3.75-12.5, D20	Unrestricted	CLIP, BRUSH, 7MM DIAMETER HOLES, 20MM DIAMTER HEAD	1010026-00-A	4	

EXTERNAL CHARGING SYSTEMS

External Charging Systems

No	Part Name	Category	Part Description	Part Number	Qty	Comments
1	HIGH POWER WALL CONNECTOR MANUAL - ENGLISH - NORTH AMERICA AND JAPAN	Unrestricted	HIGH POWER WALL CONNECTOR MANUAL - ENGLISH - NORTH AMERICA AND JAPAN	1042840-00-A	1	Manual for 1008488-00-E
*	WALL CONNECTOR TOP HOUSING COVER ASSEMBLY	Unrestricted	WALL CONNECTOR TOP HOUSING COVER ASSEMBLY	1038142-00-A	1	Use on 1038866-01-B and on 1008488-00-E.
*	VEHICLE CONNECTOR AND CABLE ASSEMBLY	Unrestricted	VEHICLE CONNECTOR AND CABLE ASSEMBLY	1011906-00-D	1	For Gen1 Wall Connectors only
*	WC,NA,1P,208-277V,80A,HW,SHRT	Unrestricted	WC,NA,1Phase,208-277V,80A,HW,SHORT 8.5ft	1050067-00-E	1	Gen 2 WC, 80A, 1-phase (Tesla connector), short cable
*	WC,NA,1P,208-277V,80A,HW,LNG	Unrestricted	WC,NA,1Phase,208-277V,80A,HW,LONG 24ft	1050067-01-E	1	Gen 2 WC, 80A, 1-phase (Tesla connector), long cable
*	WC,NA,1P,208-277V,40A,14-50,LNG	Unrestricted	WC,NA,1PHASE,208-277V,40A,14-50,LONG	1050068-01-E	1	Gen 2 WC, 40A, 1-phase (Tesla connector, 14-50 plug), long cable
*	CABLE CLAMP - 23MM X 7.1MM ZINC	Unrestricted	CABLE CLAMP - 23MM X 7.1MM ZINC	1020396-00-A	1	Metal pinch clamp. Use to install 1011906-00-D
*	PLASTIC CABLE CLAMP 21.6MM	Unrestricted	PLASTIC CABLE CLAMP 21.6MM	1011861-00-B	1	Plastic clamp. Use to install 1011906-00-D
*	SCREW, M5-0.8X20, PANHEAD, TORX, STEEL, ZINC COATED	Unrestricted	SCREW, M5-0.8X20, PANHEAD, TORX, STEEL, ZINC COATED	1018870-00-A	1	Screw for plastic clamp. Use to install 1011906-00-D
*	RUBBER GROMMET - 21.6MM INNER DIAMETER X 28.6MM OUTER DIAMETER X 7.08MM THICK	Unrestricted	RUBBER GROMMET - 21.6MM INNER DIAMETER X 28.6MM OUTER DIAMETER X 7.08MM THICK	1011908-00-B	1	Rubber grommet for cable. Use to install 1011906-00-D
*	VEHICLE CONNECTOR DOCK ASSEMBLY	Unrestricted	VEHICLE CONNECTOR DOCK ASSEMBLY	1022771-00-A	1	
*	HIGH POWER CONNECTOR FUSE L2 ASSEMBLY - 200AMP	Unrestricted	HIGH POWER CONNECTOR FUSE L2 ASSEMBLY - 200AMP	1011912-00-B	1	
*	HIGH POWER CONNECTOR FUSE L1 ASSEMBLY - 200AMP	Unrestricted	HIGH POWER CONNECTOR FUSE L1 ASSEMBLY - 200AMP	1011914-00-B	1	

*	HIGH POWER CONNECTOR INSULATOR - 80AMP	Unrestricted	HIGH POWER CONNECTOR INSULATOR - 80AMP	1026161-00-A	1	
*	SCREW, M4-0.7x10, PANHEAD,TORX, STAINLESS STEEL	Unrestricted	SCREW, M4-0.7x10, PANHEAD,TORX, STAINLESS STEEL	1016481-00-A	2	for top cover
*	WASHER, OTHR, M4, 9.5, STAINLESS STEEL 18-8 WITH SEAL	Unrestricted	WASHER, OTHER, M4, 9.5, STAINLESS STEEL 18-8 WITH SEAL	1018877-00-A	2	for top cover
*	USE INDICATOR LOGO LABEL	Unrestricted	USE INDICATOR LOGO LABEL	1038136-00-A	1	
2	MOBILE CONNECTOR - SILVER	Unrestricted	MOBILE CONNECTOR - SILVER	1015786-99-B	1	USA and Japan warranty replacements only
2	MOBILE CONNECTOR - SILVER	Unrestricted	MOBILE CONNECTOR - SILVER	1058221-01-G	1	
2	MODEL S MOBILE CONNECTOR BUNDLE WITH 14-50 AND 5-15 ADAPTER	Unrestricted	MODEL S MOBILE CONNECTOR BUNDLE WITH 14-50 AND 5-15 ADAPTER	1025821-00-H	1	USA only
2	MODEL S MOBILE CONNECTOR BUNDLE WITH 14-50 AND 5-15 ADAPTER	Unrestricted	MODEL S MOBILE CONNECTOR BUNDLE WITH 14-50 AND 5-15 ADAPTER - CANADA	1071957-00-A	1	Canada only
*	ASY,ADPTR,J1772-TESLA,v2	Unrestricted	ASY,ADPTR,J1772-TESLA,v2	1067348-00-A	1	
*	CONNECTOR BADGE - 40AMP TO 80AMP	Unrestricted	CONNECTOR BADGE - 40AMP TO 80AMP	1007898-99-B	1	
3	ROADSTER TO MODEL S ADAPTER - 70AMP	Unrestricted	ROADSTER TO MODEL S ADAPTER - 70AMP	1016129-00-A	1	
4	NEMA 5-15 ADAPTER	Unrestricted	NEMA 5-15 ADAPTER	1014355-10-B	1	
5	NEMA 14-50 ADAPTER	Unrestricted	NEMA 14-50 ADAPTER	1014324-10-E	1	
10	NEMA 5-20 ADAPTER	Unrestricted	NEMA 5-20 ADAPTER	1016258-00-B	1	
*	NEMA 6-50 ADAPTER	Unrestricted	NEMA 6-50 ADAPTER	1016021-10-C	1	
20	CHAdEMO ADAPTER - NA	Unrestricted	CHAdeMO ADAPTER - NORTH AMERICA	1036392-10-D	1	
*	CMC w/ 14-50 Plug	Unrestricted	CMC w/ 14-50 Plug	1046716-00-E	1	
*	STORAGE BAG - MOBILE CONNECTOR	Unrestricted	MOBILE CONNECTOR STORAGE BAG	1020270-00-B	1	

Front Drive Unit Assembly

Motor

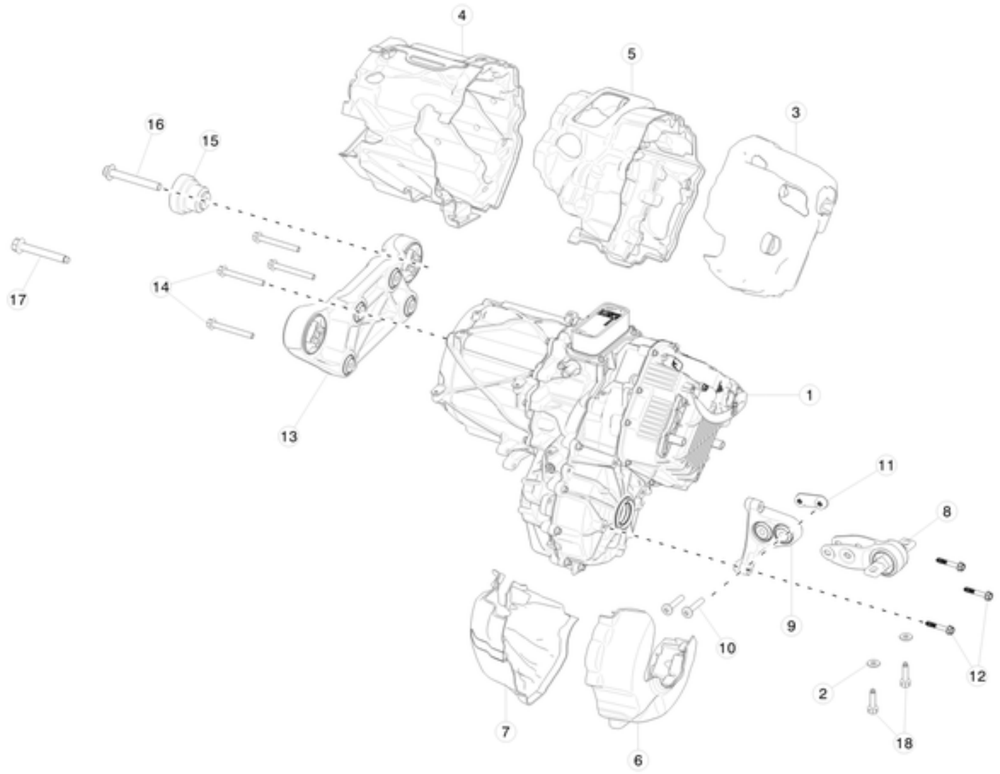

No	Part Name	Category	Part Description	Part Number	Qty	Comments
1	ASY,DRIVE,UNIT,3.0-150, FRONT	Unrestricted	FRONT DRIVE UNIT W/ MOUNTS - DUAL MOTOR	1035000-00-F	1	Installed on vehicles built before June 8, 2016. Front small drive unit with motor mounts: 1055368-00-F and 1055366-00-F, and fasteners: 1004350-00-A and 1055663-00-A. 1035000-00-F and older use 1.75L MOBIL SHC 629, 1055544-00-A Fluid is GOLD in color.
1	ASY,DRIVE,UNIT,3.0-150, FRONT	Unrestricted	FRONT DRIVE UNIT W/ MOUNTS - DUAL MOTOR	1035000-00-J	1	Installed on vehicles built on or after June 8, 2016. Front small drive unit with motor mounts: 1055368-00-F and 1055366-00-F, and fasteners: 1004350-00-A and 1055663-00-A. Uses SK LUBRICANT 212-B. Fluid is RED in color
*	SK LUBRICANT 212-B - ATF, QUART	Unrestricted	SK LUBRICANT 212-B - ATF, QUART	1031106-00-A	1.75L	5 gallon container. For front drive unit 1035000-00-J or newer.
*	SK LUBRICANT 212-B - ATF, DRUM	Unrestricted	SK LUBRICANT 212-B - ATF, DRUM	1061469-00-A	1.75L	For front drive unit 1035000-00-J or newer.
*	LUBE, MOBIL SHC 629	Unrestricted	LUBE, MOBIL SHC 629	1055544-00-A	1.75L	5 gallon container. for front drive unit 1035000-00-F or earlier.
2	WSHR FL M10x24x3 [10]-G720	Unrestricted	WASHER FLANGE M10 X 24 X3	1055365-00-B	2	For installing front drive unit. Use with 2007069.
3	CVR,ACOUSTIC,INVRTR,SDU-F	Unrestricted	ACOUSTIC COVER - INVERTER - SMALL DRIVE UNIT - FRONT	1048945-01-A	1	For vehicles with option code: DV4W
4	CVR,ACOUSTIC,BCKT,SDU-F	Unrestricted	ACOUSTIC COVER - BRACKET - SMALL DRIVE UNIT - FRONT	1048946-01-A	1	For vehicles with option code: DV4W.
5	CVR,ACOUSTIC,CTR SPINE,SDU-F	Unrestricted	ACOUSTIC COVER - CENTER SPINE - SMALL DRIVE UNIT - FRONT	1048947-01-A	1	For vehicles with option code: DV4W.
6	CVR,ACOUSTIC,LHS DIFF,SDU-F	Unrestricted	ACOUSTIC COVER - LEFT HAND SIDE DIFFERENTIAL - SMALL DRIVE UNIT - FRONT	1048948-01-A	1	For vehicles with option code: DV4W.
7	CVR,ACOUSTIC,RHS DIFF,SDU-F	Unrestricted	ACOUSTIC COVER - RIGHT HAND SIDE DIFFERENTIAL - SMALL DRIVE UNIT - FRONT	1048949-01-A	1	For vehicles with option code: DV4W.
8	CLVS ASSY,DBL ISO,LHS MTR MNT,SDU-F	Unrestricted	DOUBLE ISOLATION LEFT HAND SIDE MOTOR MOUNT - CLEVIS ASSEMBLY - SMALL DRIVE UNIT - FRONT	1055366-00-G	1	For Dual Motor - front drive unit side motor mount - use to make 1033908-00-G

9	MNT ASSY,DBL ISO,LHS MTR MNT,SDU-F	Unrestricted	DOUBLE ISOLATION - LEFT HAND SIDE MOTOR MOUNT - MOUNT ASSEMBLY - SMALL DRIVE UNIT - FRONT	1055368-00-G	1	For Dual Motor - front drive unit side motor mount - use to make 1033908-00-G
10	BLT BTNHD M10x1.50x57 [10.9] ZnAl-W	Unrestricted	BOLT, BUTTONHEAD, M10x1.50x57MM, ZINC ALUMINUM	1004350-00-A	2	For Dual Motor - front drive unit side motor mount - use to make 1033908-00-G
11	NUT PLATE ASSY,LHS MTR MNT,SDU-F	Unrestricted	NUT PLATE ASSY - LEFT HAND SIDE MOTOR MOUNT - SMALL DRIVE UNIT FRONT	1055663-00-A	1	For Dual Motor - front drive unit side motor mount - use to make 1033908-00-G
12	BOLT,M8-1.25x50,DIN6921,10.9,MTPT,ZF,PAT	Unrestricted	BOLT, M8-1.25x50MM, MATPOINT	1008724-00-B	3	Use with 1033908-00-F
13	TRQ RCTN ARM ASSY,FRGD,SDU-F	Unrestricted	TORQUE REACTION ARM ASSEMBLY	1052783-00-C	1	For Dual Motor - front drive unit.
14	BOLT HF M10x90 PC109	Unrestricted	BOLT M10x90	1050057-00-B	4	Use with 1052783-00-C.
15	MASS DAMPER RR MOTOR MOUNT	Unrestricted	MOTOR MOUNT MASS DAMPER - FRONT DRIVE UNIT REAR	1050643-00-A	1	Use to mount front drive unit to vehicle.
16	BOLT HF M14x2.00x120 [10.9]-U-G720	Unrestricted	BOLT, M14x2.00x120MM	2007060	1	Use to mount front drive unit to vehicle.
17	BOLT HF M14x102 PC109	Unrestricted	BOLT, M14x102	2007074	1	Use to mount front drive unit to vehicle.
18	BOLT HF M10x1.50x30 [10.9]-U-MP-G720	Unrestricted	BOLT M10x1.50x30	2007069	2	Use to mount front drive unit to vehicle.
*	Oil Seal	Unrestricted	OUTPUT SEAL	1065932-00-A	2	Order in quantities of 10; minimum order: 10.
*	1028644-00-B	Unrestricted	PIP SEAL, COOLER SDU	1028644-00-B	3	

GEARBOX AND HALFSHAFTS

Halfshafts

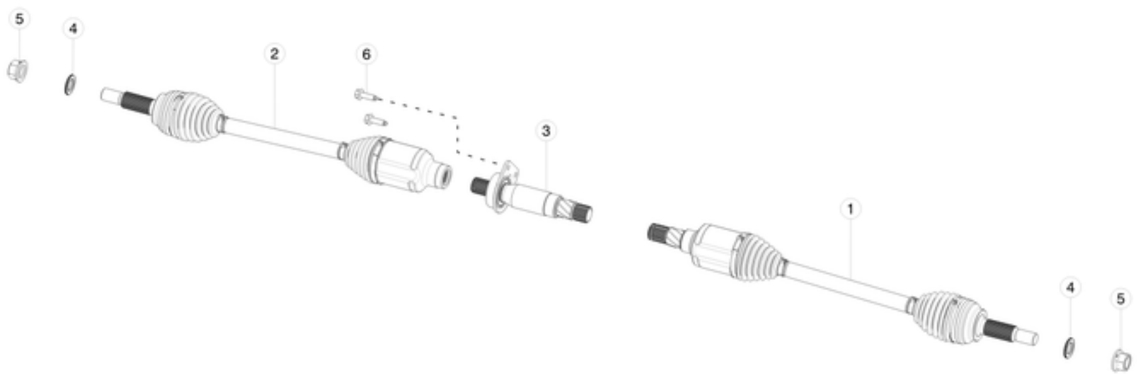

No	Part Name	Category	Part Description	Part Number	Qty	Comments
1	HALFSHAFT, FR, LH, MODEL S HPDM	Unrestricted	FRONT LEFT HALFSHAFT - DUAL MOTOR	1030615-00-B	1	For Dual Motor.
2	HALFSHAFT, FR, RH, MODEL S HPDM	Unrestricted	FRONT RIGHT HALFSHAFT - DUAL MOTOR	1030616-00-B	1	For Dual Motor.
3	JACKSHAFT ASSY, FR, MODEL S HPDM	Unrestricted	FRONT JACKSHAFT ASSEMBLY - DUAL MOTOR	1030632-00-A	1	For Dual Motor.
4	WASHER ASSY LCK M24x39 ZnFl-W	Unrestricted	LOCK WASHER ASSEMBLY M24x39	1020296-00-B	2	For Dual Motor.
5	NUT HF M24x1.5 [8.8] ZnFl-W	Unrestricted	NUT, HEX FLANGE M24x1.5	1020297-00-A	2	For Dual Motor.
6	BOLT HF M10x1.50x25 [10.9]-G720	Unrestricted	BOLT HF M10x1.50x25 [10.9]-G720	2007116	2	For Dual Motor.

CHARGE SYSTEM INLET

Charge Port

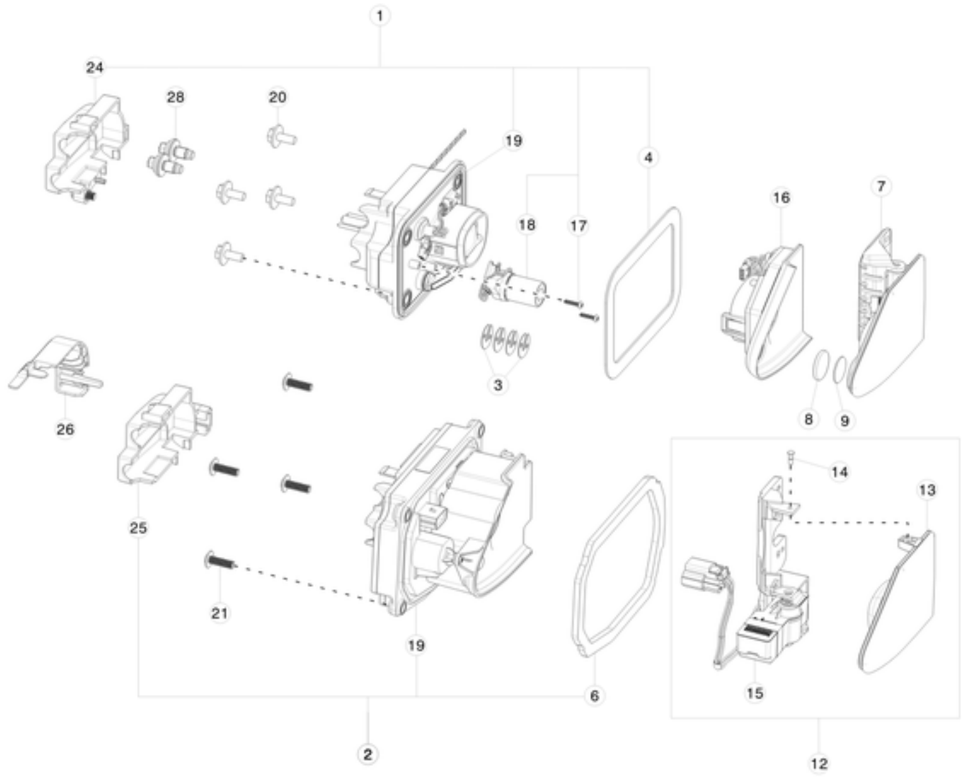

No	Part Name	Category	Part Description	Part Number	Qty	Comments
2	ASY, CHARGEPORT, MDLS, GEN2, US	Unrestricted	ELECTRIC VEHICLE INLET ASSEMBLY - GEN2 US	1026041-00-M	1	
2	ASY, CHARGEPORT, MDLS, GEN2, US	Unrestricted	ELECTRIC VEHICLE INLET ASSEMBLY - GEN2 US	1026041-00-M	1	
2	ASY, CHARGEPORT, MDLS, GEN2, US	Unrestricted	ELECTRIC VEHICLE INLET ASSEMBLY - GEN2 US	1026041-00-M	1	
2	ASY, CHARGEPORT, MDLS, GEN2, US	Unrestricted	ELECTRIC VEHICLE INLET ASSEMBLY - GEN2 US	1026041-00-M	1	
2	ASY, CHARGEPORT, MDLS, GEN2, US	Unrestricted	ELECTRIC VEHICLE INLET ASSEMBLY - GEN2 US	1026041-00-M	1	
3	SHIM,0.5MM THICK,POLYCARB,EMAG,INLET,EV	Unrestricted	ELECTRIC VEHICLE INLET POLYCARBONATE SHIM - 0.5MM THICK	1017281-00-A	**	Use to adjust magnet on charge port
3	SHIM,0.5MM THICK,POLYCARB,EMAG,INLET,EV	Unrestricted	ELECTRIC VEHICLE INLET POLYCARBONATE SHIM - 0.5MM THICK	1017281-00-A	**	Use to adjust magnet on charge port
3	SHIM,0.5MM THICK,POLYCARB,EMAG,INLET,EV	Unrestricted	ELECTRIC VEHICLE INLET POLYCARBONATE SHIM - 0.5MM THICK	1017281-00-A	**	Use to adjust magnet on charge port
3	SHIM,0.5MM THICK,POLYCARB,EMAG,INLET,EV	Unrestricted	ELECTRIC VEHICLE INLET POLYCARBONATE SHIM - 0.5MM THICK	1017281-00-A	**	Use to adjust magnet on charge port
3	SHIM,0.5MM THICK,POLYCARB,EMAG,INLET,EV	Unrestricted	ELECTRIC VEHICLE INLET POLYCARBONATE SHIM - 0.5MM THICK	1017281-00-A	**	Use to adjust magnet on charge port
4	GASKET,SI FOAM,1.15MM Tx109.5MMx73MM	Unrestricted	SILICONE FOAM GASKET - 109.5MM X 73MM X 1.15MM THICK	1017900-00-A	1	orange gasket
4	GASKET,SI FOAM,1.15MM Tx109.5MMx73MM	Unrestricted	SILICONE FOAM GASKET - 109.5MM X 73MM X 1.15MM THICK	1017900-00-A	1	orange gasket
4	GASKET,SI FOAM,1.15MM Tx109.5MMx73MM	Unrestricted	SILICONE FOAM GASKET - 109.5MM X 73MM X 1.15MM THICK	1017900-00-A	1	orange gasket
4	GASKET,SI FOAM,1.15MM Tx109.5MMx73MM	Unrestricted	SILICONE FOAM GASKET - 109.5MM X 73MM X 1.15MM THICK	1017900-00-A	1	orange gasket

4	GASKET,SI FOAM,1.15MM Tx109.5MMx73MM	Unrestricted	SILICONE FOAM GASKET - 109.5MM X 73MM X 1.15MM THICK	1017900-00-A	1	orange gasket
6	SEAL,BODY,IEC62196 INLET,MDLS	Unrestricted	INLET BODY SEAL	1022531-00-B	1	
6	SEAL,BODY,IEC62196 INLET,MDLS	Unrestricted	INLET BODY SEAL	1022531-00-B	1	
6	SEAL,BODY,IEC62196 INLET,MDLS	Unrestricted	INLET BODY SEAL	1022531-00-B	1	
6	SEAL,BODY,IEC62196 INLET,MDLS	Unrestricted	INLET BODY SEAL	1022531-00-B	1	
6	SEAL,BODY,IEC62196 INLET,MDLS	Unrestricted	INLET BODY SEAL	1022531-00-B	1	
*	61 ROUND CABLE CORE ASSM - FERRITE LARGE	Unrestricted	FERRITE LARGE - 61 ROUND CABLE CORE ASSEMBLY	1038709-00-A	1	
*	61 ROUND CABLE CORE ASSM - FERRITE LARGE	Unrestricted	FERRITE LARGE - 61 ROUND CABLE CORE ASSEMBLY	1038709-00-A	1	
*	61 ROUND CABLE CORE ASSM - FERRITE LARGE	Unrestricted	FERRITE LARGE - 61 ROUND CABLE CORE ASSEMBLY	1038709-00-A	1	
*	61 ROUND CABLE CORE ASSM - FERRITE LARGE	Unrestricted	FERRITE LARGE - 61 ROUND CABLE CORE ASSEMBLY	1038709-00-A	1	
*	61 ROUND CABLE CORE ASSM - FERRITE LARGE	Unrestricted	FERRITE LARGE - 61 ROUND CABLE CORE ASSEMBLY	1038709-00-A	1	
*	61 ROUND CABLE CORE ASSM - FERRITE	Unrestricted	FERRITE - 61 ROUND CABLE CORE ASSEMBLY	1038706-00-A	3	
*	61 ROUND CABLE CORE ASSM - FERRITE	Unrestricted	FERRITE - 61 ROUND CABLE CORE ASSEMBLY	1038706-00-A	3	
*	61 ROUND CABLE CORE ASSM - FERRITE	Unrestricted	FERRITE - 61 ROUND CABLE CORE ASSEMBLY	1038706-00-A	3	
*	61 ROUND CABLE CORE ASSM - FERRITE	Unrestricted	FERRITE - 61 ROUND CABLE CORE ASSEMBLY	1038706-00-A	3	
*	61 ROUND CABLE CORE ASSM - FERRITE	Unrestricted	FERRITE - 61 ROUND CABLE CORE ASSEMBLY	1038706-00-A	3	
*	CLIP,TIE,SWIVEL,4.5, 5.2MM HOSE	Unrestricted	SWIVEL TIE CLIP - 4.5MM, 5.2MM HOSE	1015203-00-A	1	Order in quantities of 50; minimum order: 50.
*	CLIP,TIE,SWIVEL,4.5, 5.2MM HOSE	Unrestricted	SWIVEL TIE CLIP - 4.5MM, 5.2MM HOSE	1015203-00-A	1	Order in quantities of 50; minimum order: 50.
*	CLIP,TIE,SWIVEL,4.5, 5.2MM HOSE	Unrestricted	SWIVEL TIE CLIP - 4.5MM, 5.2MM HOSE	1015203-00-A	1	Order in quantities of 50; minimum order: 50.
*	CLIP,TIE,SWIVEL,4.5, 5.2MM HOSE	Unrestricted	SWIVEL TIE CLIP - 4.5MM, 5.2MM HOSE	1015203-00-A	1	Order in quantities of 50; minimum order: 50.
*	CLIP,TIE,SWIVEL,4.5, 5.2MM HOSE	Unrestricted	SWIVEL TIE CLIP - 4.5MM, 5.2MM HOSE	1015203-00-A	1	Order in quantities of 50; minimum order: 50.
*	STD CABLE TIE - 5.8IN	Unrestricted	STANDARD CABLE TIE - 5.8IN	1039480-00-A	2	Order in quantities of 100; minimum order: 100.
*	STD CABLE TIE - 5.8IN	Unrestricted	STANDARD CABLE TIE - 5.8IN	1039480-00-A	2	Order in quantities of 100; minimum order: 100.
*	STD CABLE TIE - 5.8IN	Unrestricted	STANDARD CABLE TIE - 5.8IN	1039480-00-A	2	Order in quantities of 100; minimum order: 100.
*	STD CABLE TIE - 5.8IN	Unrestricted	STANDARD CABLE TIE - 5.8IN	1039480-00-A	2	Order in quantities of 100; minimum order: 100.
*	STD CABLE TIE - 5.8IN	Unrestricted	STANDARD CABLE TIE - 5.8IN	1039480-00-A	2	Order in quantities of 100; minimum order: 100.
*	TESA ELECTRICAL TAPE	Unrestricted	TESA ELECTRICAL TAPE	1038765-00-A	A/N	
*	TESA ELECTRICAL TAPE	Unrestricted	TESA ELECTRICAL TAPE	1038765-00-A	A/N	
*	TESA ELECTRICAL TAPE	Unrestricted	TESA ELECTRICAL TAPE	1038765-00-A	A/N	
*	TESA ELECTRICAL TAPE	Unrestricted	TESA ELECTRICAL TAPE	1038765-00-A	A/N	
*	TESA ELECTRICAL TAPE	Unrestricted	TESA ELECTRICAL TAPE	1038765-00-A	A/N	
7	ASY - CHARGE PORT DOOR	Unrestricted	CHARGE PORT DOOR ASSEMBLY	1007189-00-G	1	
7	ASY - CHARGE PORT DOOR	Unrestricted	CHARGE PORT DOOR ASSEMBLY	1007189-00-G	1	
7	ASY - CHARGE PORT DOOR	Unrestricted	CHARGE PORT DOOR ASSEMBLY	1007189-00-G	1	
7	ASY - CHARGE PORT DOOR	Unrestricted	CHARGE PORT DOOR ASSEMBLY	1007189-00-G	1	
7	ASY - CHARGE PORT DOOR	Unrestricted	CHARGE PORT DOOR ASSEMBLY	1007189-00-G	1	
8	ARMATURE SS - CHARGEPORT DOOR - SAE	Unrestricted	CHARGE PORT DOOR ARMATURE - SAE	1007211-00-C	1	
8	ARMATURE SS - CHARGEPORT DOOR - SAE	Unrestricted	CHARGE PORT DOOR ARMATURE - SAE	1007211-00-C	1	
8	ARMATURE SS - CHARGEPORT DOOR - SAE	Unrestricted	CHARGE PORT DOOR ARMATURE - SAE	1007211-00-C	1	
8	ARMATURE SS - CHARGEPORT DOOR - SAE	Unrestricted	CHARGE PORT DOOR ARMATURE - SAE	1007211-00-C	1	
8	ARMATURE SS - CHARGEPORT DOOR - SAE	Unrestricted	CHARGE PORT DOOR ARMATURE - SAE	1007211-00-C	1	
9	Tape, Armature Chargeport Door C	Unrestricted	CHARGE PORT DOOR ARMATURE TAPE	1021931-00-C	1	use with 1007211-00-C
9	Tape, Armature Chargeport Door C	Unrestricted	CHARGE PORT DOOR ARMATURE TAPE	1021931-00-C	1	use with 1007211-00-C
9	Tape, Armature Chargeport Door C	Unrestricted	CHARGE PORT DOOR ARMATURE TAPE	1021931-00-C	1	use with 1007211-00-C

9	Tape, Armature Chargeport Door C	Unrestricted	CHARGE PORT DOOR ARMATURE TAPE	1021931-00-C	1	use with 1007211-00-C
9	Tape, Armature Chargeport Door C	Unrestricted	CHARGE PORT DOOR ARMATURE TAPE	1021931-00-C	1	use with 1007211-00-C
*	ELBOW-DRAIN TUBE ASM	Unrestricted	DRAIN TUBE ELBOW ASSEMBLY	1023052-00-A	1	
*	ELBOW-DRAIN TUBE ASM	Unrestricted	DRAIN TUBE ELBOW ASSEMBLY	1023052-00-A	1	
*	ELBOW-DRAIN TUBE ASM	Unrestricted	DRAIN TUBE ELBOW ASSEMBLY	1023052-00-A	1	
*	ELBOW-DRAIN TUBE ASM	Unrestricted	DRAIN TUBE ELBOW ASSEMBLY	1023052-00-A	1	
*	ELBOW-DRAIN TUBE ASM	Unrestricted	DRAIN TUBE ELBOW ASSEMBLY	1023052-00-A	1	
*	DRAIN TUBE ASM-LAMP HSNG	Unrestricted	LAMP HOUSING DRAIN TUBE ASSEMBLY	1023057-00-A	1	
*	DRAIN TUBE ASM-LAMP HSNG	Unrestricted	LAMP HOUSING DRAIN TUBE ASSEMBLY	1023057-00-A	1	
*	DRAIN TUBE ASM-LAMP HSNG	Unrestricted	LAMP HOUSING DRAIN TUBE ASSEMBLY	1023057-00-A	1	
*	DRAIN TUBE ASM-LAMP HSNG	Unrestricted	LAMP HOUSING DRAIN TUBE ASSEMBLY	1023057-00-A	1	
*	DRAIN TUBE ASM-LAMP HSNG	Unrestricted	LAMP HOUSING DRAIN TUBE ASSEMBLY	1023057-00-A	1	
*	PLUG - DRAIN TUBE ACCESS	Unrestricted	DRAIN TUBE ACCESS PLUG	1023383-00-A	1	
*	PLUG - DRAIN TUBE ACCESS	Unrestricted	DRAIN TUBE ACCESS PLUG	1023383-00-A	1	
*	PLUG - DRAIN TUBE ACCESS	Unrestricted	DRAIN TUBE ACCESS PLUG	1023383-00-A	1	
*	PLUG - DRAIN TUBE ACCESS	Unrestricted	DRAIN TUBE ACCESS PLUG	1023383-00-A	1	
*	PLUG - DRAIN TUBE ACCESS	Unrestricted	DRAIN TUBE ACCESS PLUG	1023383-00-A	1	
12	ASSY, MOTORIZED CHARGEPORT DOOR, SAE	Unrestricted	CHARGE PORT DOOR ASSEMBLY - MOTORIZED	1038548-00-F	1	
12	ASSY, MOTORIZED CHARGEPORT DOOR, SAE	Unrestricted	CHARGE PORT DOOR ASSEMBLY - MOTORIZED	1038548-00-F	1	
12	ASSY, MOTORIZED CHARGEPORT DOOR, SAE	Unrestricted	CHARGE PORT DOOR ASSEMBLY - MOTORIZED	1038548-00-F	1	
12	ASSY, MOTORIZED CHARGEPORT DOOR, SAE	Unrestricted	CHARGE PORT DOOR ASSEMBLY - MOTORIZED	1038548-00-F	1	
12	ASSY, MOTORIZED CHARGEPORT DOOR, SAE	Unrestricted	CHARGE PORT DOOR ASSEMBLY - MOTORIZED	1038548-00-F	1	
*	SCR, TORX WSHR HD W/POINT R, 40x16mm	Unrestricted	SCREW, M6-1x16, TRUSSHEAD, STEEL, ZINC NICKEL WITH PATCH	1012740-00-A	1	To attach charge port door assy
*	SCR, TORX WSHR HD W/POINT R, 40x16mm	Unrestricted	SCREW, M6-1x16, TRUSSHEAD, STEEL, ZINC NICKEL WITH PATCH	1012740-00-A	1	To attach charge port door assy
*	SCR, TORX WSHR HD W/POINT R, 40x16mm	Unrestricted	SCREW, M6-1x16, TRUSSHEAD, STEEL, ZINC NICKEL WITH PATCH	1012740-00-A	1	To attach charge port door assy
*	SCR, TORX WSHR HD W/POINT R, 40x16mm	Unrestricted	SCREW, M6-1x16, TRUSSHEAD, STEEL, ZINC NICKEL WITH PATCH	1012740-00-A	1	To attach charge port door assy
*	SCR, TORX WSHR HD W/POINT R, 40x16mm	Unrestricted	SCREW, M6-1x16, TRUSSHEAD, STEEL, ZINC NICKEL WITH PATCH	1012740-00-A	1	To attach charge port door assy
13	ASSY, DOOR, MCD, SAE	Unrestricted	DOOR ASSEMBLY FOR MOTORIZED CHARGEPORT DOOR - SAE	1038549-00-B	1	
13	ASSY, DOOR, MCD, SAE	Unrestricted	DOOR ASSEMBLY FOR MOTORIZED CHARGEPORT DOOR - SAE	1038549-00-B	1	
13	ASSY, DOOR, MCD, SAE	Unrestricted	DOOR ASSEMBLY FOR MOTORIZED CHARGEPORT DOOR - SAE	1038549-00-B	1	
13	ASSY, DOOR, MCD, SAE	Unrestricted	DOOR ASSEMBLY FOR MOTORIZED CHARGEPORT DOOR - SAE	1038549-00-B	1	
13	ASSY, DOOR, MCD, SAE	Unrestricted	DOOR ASSEMBLY FOR MOTORIZED CHARGEPORT DOOR - SAE	1038549-00-B	1	
14	PIN, MCD	Unrestricted	CHARGEPORT DOOR PIN	1038552-00-A	1	
14	PIN, MCD	Unrestricted	CHARGEPORT DOOR PIN	1038552-00-A	1	
14	PIN, MCD	Unrestricted	CHARGEPORT DOOR PIN	1038552-00-A	1	
14	PIN, MCD	Unrestricted	CHARGEPORT DOOR PIN	1038552-00-A	1	
14	PIN, MCD	Unrestricted	CHARGEPORT DOOR PIN	1038552-00-A	1	
16	TRIM - ASY - INLET - EV	Unrestricted	ELECTRIC VEHICLE INLET TRIM ASSEMBLY	1005613-00-E	1	
16	TRIM - ASY - INLET - EV	Unrestricted	ELECTRIC VEHICLE INLET TRIM ASSEMBLY	1005613-00-E	1	
16	TRIM - ASY - INLET - EV	Unrestricted	ELECTRIC VEHICLE INLET TRIM ASSEMBLY	1005613-00-E	1	
16	TRIM - ASY - INLET - EV	Unrestricted	ELECTRIC VEHICLE INLET TRIM ASSEMBLY	1005613-00-E	1	
16	TRIM - ASY - INLET - EV	Unrestricted	ELECTRIC VEHICLE INLET TRIM ASSEMBLY	1005613-00-E	1	
17	SCR,4-20X.5,PH,TRX-T10,SST18-8,PLASTITE	Unrestricted	SCREW, 4-20X.5, PANHEAD, TORX-T10 , STAINLESS STEEL 18-8, PLASTITE	1020445-00-A	2	
17	SCR,4-20X.5,PH,TRX-T10,SST18-8,PLASTITE	Unrestricted	SCREW, 4-20X.5, PANHEAD, TORX-T10 , STAINLESS STEEL 18-8, PLASTITE	1020445-00-A	2	

17	SCR,4-20X.5,PH,TRX-T10,SST18-8,PLASTITE	Unrestricted	SCREW, 4-20X.5, PANHEAD, TORX-T10 , STAINLESS STEEL 18-8, PLASTITE	1020445-00-A	2	
17	SCR,4-20X.5,PH,TRX-T10,SST18-8,PLASTITE	Unrestricted	SCREW, 4-20X.5, PANHEAD, TORX-T10 , STAINLESS STEEL 18-8, PLASTITE	1020445-00-A	2	
17	SCR,4-20X.5,PH,TRX-T10,SST18-8,PLASTITE	Unrestricted	SCREW, 4-20X.5, PANHEAD, TORX-T10 , STAINLESS STEEL 18-8, PLASTITE	1020445-00-A	2	
19	CHARGE PORT	Unrestricted	CHARGE PORT	NA	1	Only available with item #1
19	CHARGE PORT	Unrestricted	CHARGE PORT	NA	1	Only available with item #1
19	CHARGE PORT	Unrestricted	CHARGE PORT	NA	1	Only available with item #1
19	CHARGE PORT	Unrestricted	CHARGE PORT	NA	1	Only available with item #1
19	CHARGE PORT	Unrestricted	CHARGE PORT	NA	1	Only available with item #1
21	BLT,M6X1X20,BTN FLG,T30,ZnNi,PTCH	Unrestricted	BOLT, M6x1x20, BUTTON FLANGE, T30 ZINCNICKEL WITH PATCH	1030788-00-A	4	use to install North America Gen 2 charge port
21	BLT,M6X1X20,BTN FLG,T30,ZnNi,PTCH	Unrestricted	BOLT, M6x1x20, BUTTON FLANGE, T30 ZINCNICKEL WITH PATCH	1030788-00-A	4	use to install North America Gen 2 charge port
21	BLT,M6X1X20,BTN FLG,T30,ZnNi,PTCH	Unrestricted	BOLT, M6x1x20, BUTTON FLANGE, T30 ZINCNICKEL WITH PATCH	1030788-00-A	4	use to install North America Gen 2 charge port
21	BLT,M6X1X20,BTN FLG,T30,ZnNi,PTCH	Unrestricted	BOLT, M6x1x20, BUTTON FLANGE, T30 ZINCNICKEL WITH PATCH	1030788-00-A	4	use to install North America Gen 2 charge port
21	BLT,M6X1X20,BTN FLG,T30,ZnNi,PTCH	Unrestricted	BOLT, M6x1x20, BUTTON FLANGE, T30 ZINCNICKEL WITH PATCH	1030788-00-A	4	use to install North America Gen 2 charge port
24	SUBASY - COVER - PWR LUG - INLET - EV	Unrestricted	ELECTRIC VEHICLE INLET POWER LUG COVER SUB-ASSEMBLY	1006923-00-B	1	
24	SUBASY - COVER - PWR LUG - INLET - EV	Unrestricted	ELECTRIC VEHICLE INLET POWER LUG COVER SUB-ASSEMBLY	1006923-00-B	1	
24	SUBASY - COVER - PWR LUG - INLET - EV	Unrestricted	ELECTRIC VEHICLE INLET POWER LUG COVER SUB-ASSEMBLY	1006923-00-B	1	
24	SUBASY - COVER - PWR LUG - INLET - EV	Unrestricted	ELECTRIC VEHICLE INLET POWER LUG COVER SUB-ASSEMBLY	1006923-00-B	1	
24	SUBASY - COVER - PWR LUG - INLET - EV	Unrestricted	ELECTRIC VEHICLE INLET POWER LUG COVER SUB-ASSEMBLY	1006923-00-B	1	
25	COVER,HV LUG,INLET,GEN II	Unrestricted	HIGH VOLTAGE INLET LUG COVER - GEN II	1041702-00-C	1	
25	COVER,HV LUG,INLET,GEN II	Unrestricted	HIGH VOLTAGE INLET LUG COVER - GEN II	1041702-00-C	1	
25	COVER,HV LUG,INLET,GEN II	Unrestricted	HIGH VOLTAGE INLET LUG COVER - GEN II	1041702-00-C	1	
25	COVER,HV LUG,INLET,GEN II	Unrestricted	HIGH VOLTAGE INLET LUG COVER - GEN II	1041702-00-C	1	
25	COVER,HV LUG,INLET,GEN II	Unrestricted	HIGH VOLTAGE INLET LUG COVER - GEN II	1041702-00-C	1	
25	COVER,HV LUG,INLET,GEN II	Unrestricted	HIGH VOLTAGE INLET LUG COVER - GEN II	1041702-00-C	1	
26	DUAL LOCK,COVER,HV LUG,INLET,GEN II	Unrestricted	HIGH VOLTAGE LUG DUAL LOCK INLET COVER - GEN 2	1054444-00-A	1	
26	DUAL LOCK,COVER,HV LUG,INLET,GEN II	Unrestricted	HIGH VOLTAGE LUG DUAL LOCK INLET COVER - GEN 2	1054444-00-A	1	
26	DUAL LOCK,COVER,HV LUG,INLET,GEN II	Unrestricted	HIGH VOLTAGE LUG DUAL LOCK INLET COVER - GEN 2	1054444-00-A	1	
26	DUAL LOCK,COVER,HV LUG,INLET,GEN II	Unrestricted	HIGH VOLTAGE LUG DUAL LOCK INLET COVER - GEN 2	1054444-00-A	1	
26	DUAL LOCK,COVER,HV LUG,INLET,GEN II	Unrestricted	HIGH VOLTAGE LUG DUAL LOCK INLET COVER - GEN 2	1054444-00-A	1	
28	SCR,M8-1.25x16,ETORX,9.8 ZNC,SEMS,PATCH	Unrestricted	SCREW, M8-1.25x16, EXTERNAL TORX, ZINC WITH PATCH	1013350-00-A	2	use for charge port cable to EV inlet
28	SCR,M8-1.25x16,ETORX,9.8 ZNC,SEMS,PATCH	Unrestricted	SCREW, M8-1.25x16, EXTERNAL TORX, ZINC WITH PATCH	1013350-00-A	2	use for charge port cable to EV inlet
28	SCR,M8-1.25x16,ETORX,9.8 ZNC,SEMS,PATCH	Unrestricted	SCREW, M8-1.25x16, EXTERNAL TORX, ZINC WITH PATCH	1013350-00-A	2	use for charge port cable to EV inlet
28	SCR,M8-1.25x16,ETORX,9.8 ZNC,SEMS,PATCH	Unrestricted	SCREW, M8-1.25x16, EXTERNAL TORX, ZINC WITH PATCH	1013350-00-A	2	use for charge port cable to EV inlet
28	SCR,M8-1.25x16,ETORX,9.8 ZNC,SEMS,PATCH	Unrestricted	SCREW, M8-1.25x16, EXTERNAL TORX, ZINC WITH PATCH	1013350-00-A	2	use for charge port cable to EV inlet

HV Harnesses

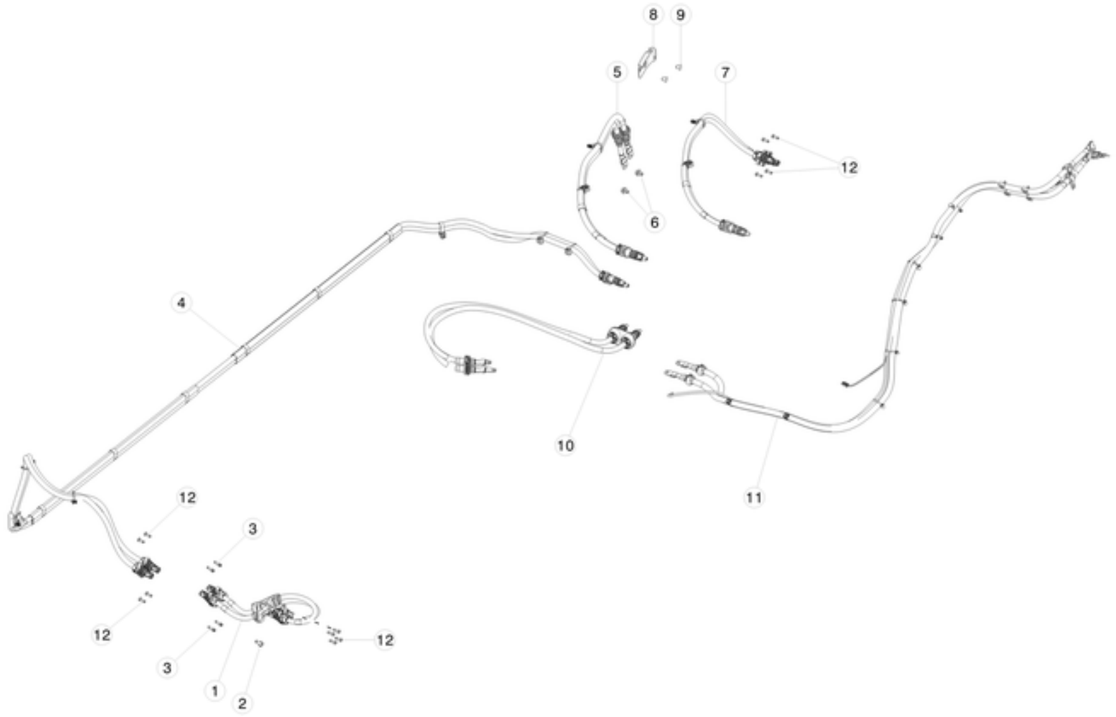

No	Part Name	Category	Part Description	Part Number	Qty	Comments
1	HV HARN,FJB-FDU,MS2	Unrestricted	HV HARN,FJB-FDU,MS2	1055875-10-E	1	
2	BOLT H M8x1.25x35 [10.9]-G720	Unrestricted	BOLT H M8x1.25x35 [10.9]-G720	2007098	1	
3	SCR,M6-1.0X18,BH,STL 8.8,ZNC,W/PATCH	Unrestricted	SCR,M6-1.0X18,BH,STL 8.8,ZNC,W/PATCH	1004373-00-A	4	
4	HV HARN,RPD SPLTR-FJB,MS2	Unrestricted	HV HARN,RPD SPLTR-FJB,MS2	1055874-10-C	1	OK to use 1055874-77-C.
5	HV HARN,RPD SPLTR-LDU,MX,MS2	Unrestricted	HV HARN,RPD SPLTR-LDU,MX,MS2	1038775-10-F	1	large rear drive unit
6	SCR,M8-1.25X18,HEX,STL,ZN,PTCH,W/WSHRS	Unrestricted	SCR,M8-1.25X18,HEX,STL,ZN,PTCH,W/WSHRS	1004405-00-A	2	large rear drive unit
7	HV HARN, RPD SPLTR-REAR SDU, MX/MS2	Unrestricted	HV HARN, RPD SPLTR-REAR SDU, MX/MS2	1038772-10-H	1	small rear drive unit
8	HV CABLE GUIDE,RR SUBFRAME	Unrestricted	HV CABLE GUIDE,RR SUBFRAME	1073543-00-A	1	
9	CLIP,BRUSH,10MM	Unrestricted	CLIP,BRUSH,10MM	1083636-00-A	2	
10	HV HARN,GEN3 CHGR-RPD SPLTR,MS RFRSH	Unrestricted	HV HARN,GEN3 CHGR-RPD SPLTR,MS RFRSH	1055868-10-C	1	
11	HV HARN,CHRG-INLET,1P,MS2	Unrestricted	HV HARN,CHRG-INLET,1P,MS2	1055873-10-D	1	CH00 AND COJP, CH00 AND RENA, CH05 AND COJP, CH05 AND RENA
12	SCR,M6x1.0x20,PH,T30,ZnNi,PTCH	Unrestricted	SCR,M6x1.0x20,PH,T30,ZnNi,PTCH	1021165-00-A	12	

DC-DC CONVERTER

DC-DC Converter

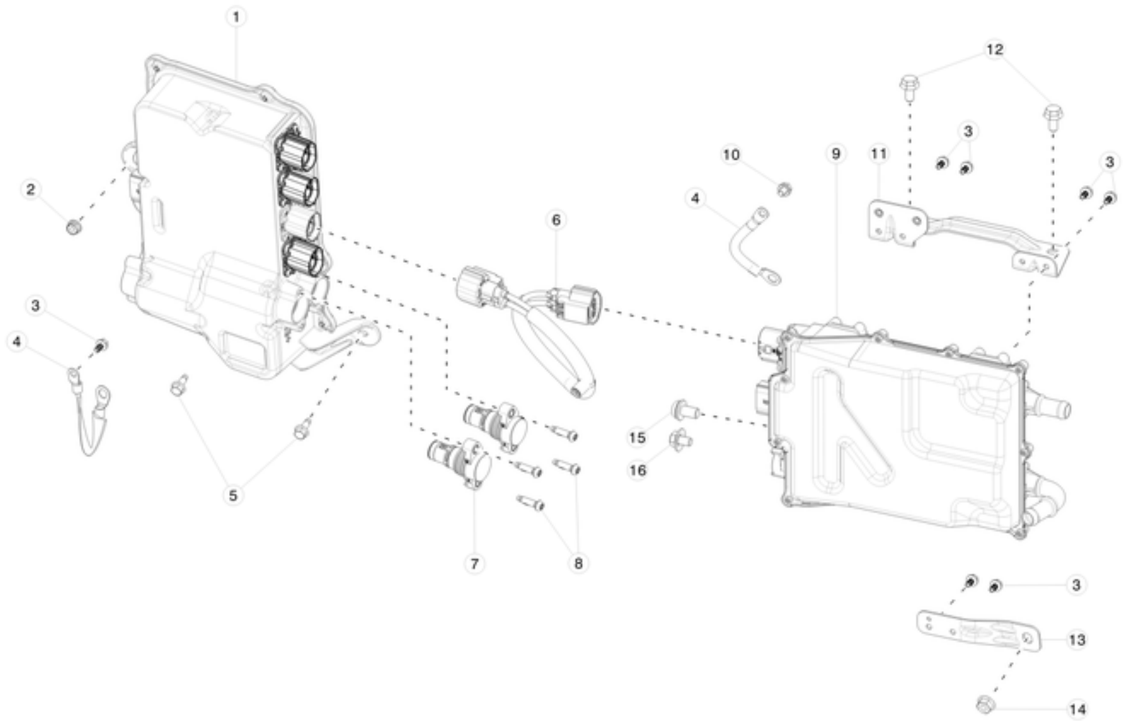

No	Part Name	Category	Part Description	Part Number	Qty	Comments
1	FRONT JUNCTION BOX_HV DSTRBTN_MS2	Unrestricted	FRONT JUNCTION BOX_HV DSTRBTN_MS2	1059891-00-C	1	
*	FUSE,FAST,40A,700VAC/DC,14MM x 51MM	Unrestricted	FAST FUSE - 40AMP, 700VOLT AC/DC, 14MM DIAMETER X 51MM LONG	1019010-00-A	2	Use in 1059891-00-C. Order in quantities of 10; minimum order: 10.
2	NUT HF M6-1.00[8]ZnAl	Unrestricted	NUT HF M6-1.00[8]ZnAl	2007207	1	
3	SCR,M5X10,HEX FLNG,STL8.8,ZN-NI,PATCH	Unrestricted	SCR,M5X10,HEX FLNG,STL8.8,ZN-NI,PATCH	1015872-00-A	7	
4	STRAP,GROUND,DCDC	Unrestricted	STRAP,GROUND,DCDC	1031159-00-A	2	
5	BOLT HF M6x14 PC88 MAT	Unrestricted	BOLT HF M6x14 PC88 MAT	1061503-00-A	1	
6	HV HARN, FBJ-DCDC, MX	Unrestricted	HV HARN, FBJ-DCDC, MX	1045091-00-D	1	
7	HVIL PLUG, HPK, RWD FJB	Unrestricted	HVIL PLUG, HPK, RWD FJB	1072229-00-B	2	
8	SCR,M6-1.0X18,BH,STL 8.8,ZNC,W/PATCH	Unrestricted	SCR,M6-1.0X18,BH,STL 8.8,ZNC,W/PATCH	1004373-00-A	4	
9	DCDC MDL S	Unrestricted	DCDC MDL S	1028665-00-E	1	
10	SCR,M6-1.0x10,HEX,SM,CREST,SST,NC	Unrestricted	SCR,M6-1.0x10,HEX,SM,CREST,SST,NC	1037759-00-A	1	
11	ASY,BRKT,DCDC,TOP	Unrestricted	ASY,BRKT,DCDC,TOP	1028676-00-D	1	
12	BLT HF M8-1.25x16[8.8]ZnAl	Unrestricted	BLT HF M8-1.25x16[8.8]ZnAl	1005582-00-A	2	
13	BRKT,DCDC,BTM	Unrestricted	BRKT,DCDC,BTM	1033107-00-A	1	
14	NUT,M8-1.25,HF,Steel[10],ZnAl,BLACK	Unrestricted	NUT,M8-1.25,HF,Steel[10],ZnAl,BLACK	1006628-01-A	1	

15	M10-1.5,20 Screw,Conical,Flat SEMS	Unrestricted	M10-1.5,20 Screw,Conical,Flat SEMS	1023927-00-A	1	
16	SCR,M8-1.25x14,HEX,SM,CREST,SST,NC	Unrestricted	SCR,M8-1.25x14,HEX,SM,CREST,SST,NC	1037760-00-A	1	
*	ASY,CBL,MDLS,ALL,EFUSE,BATT+	Unrestricted	12VOLT POSITIVE CABLE ASSEMBLY - DUAL MOTOR	2092860-00-A	1	For vehicles produced on and after August 21st, 2017
*	ASY,CBL,MDLS,ALL,EFUSE,DCDC+	Unrestricted	ASY,CBL,MDLS,ALL,EFUSE,DCDC+	2092540-00-A	1	For vehicles produced on and after August 21st, 2017

HIGH VOLTAGE RAPID SPLITTER

Rapid Splitter

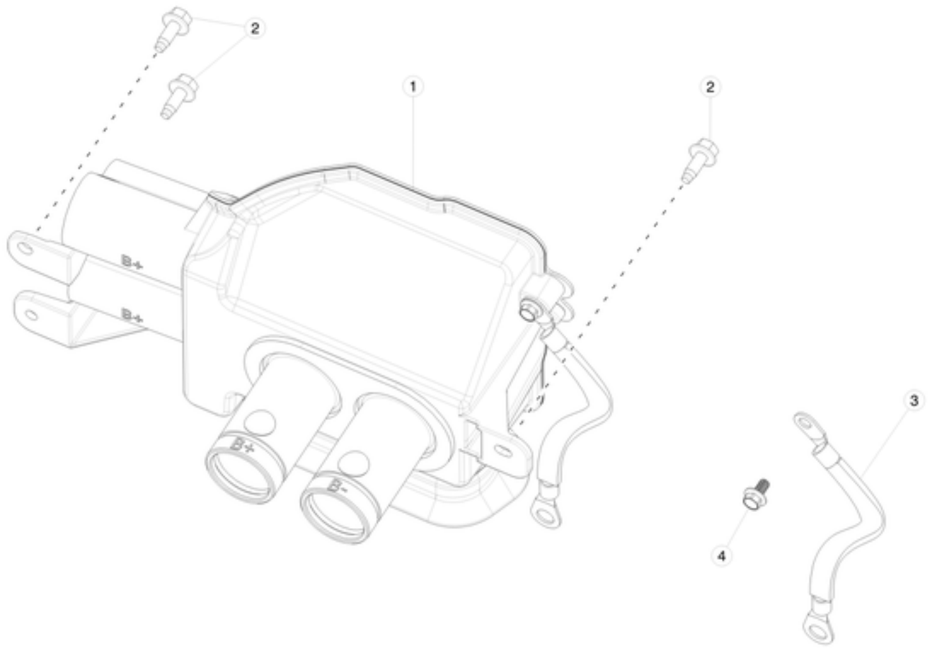

No	Part Name	Category	Part Description	Part Number	Qty	Comments
1	ASSY,RAPIDSPLITER MDLS	Unrestricted	ASSY,RAPIDSPLITER MDLS	1062600-10-B	1	
2	BOLT HF M6x14 PC88 MAT	Unrestricted	BOLT HF M6x14 PC88 MAT	1061503-00-A	3	
3	STRAP,GROUND,DCDC	Unrestricted	STRAP,GROUND,DCDC	1031159-00-A	1	
4	SCR,M5X10,HEX FLNG,STL8.8,ZN-NI,PATCH	Unrestricted	SCR,M5X10,HEX FLNG,STL8.8,ZN-NI,PATCH	1015872-00-A	1	
*	BACK SEAL,DCS,50MM,CBL SIDE	Unrestricted	BACK SEAL,DCS,50MM,CBL SIDE	1059316-00-C	1	For Gen-3 rapid splitter configuration. Needed to replace rapid splitter
*	KEY,PRS IN SLVE,50MM,RED,B+	Unrestricted	KEY,PRS IN SLVE,50MM,RED,B+	1057705-00-B	1	
*	SHLD CONT,PRS IN SLVE,DCS,50MM	Unrestricted	SHLD CONT,PRS IN SLVE,DCS,50MM	1057706-00-B	1	Includes retaining spring. Female press-in sleeve can be discarded
*	KEY,PRS IN SLVE,50MM,BLK,B-	Unrestricted	KEY,PRS IN SLVE,50MM,BLK,B-	1057707-00-B	1	

ONBOARD CHARGER

Onboard Charger

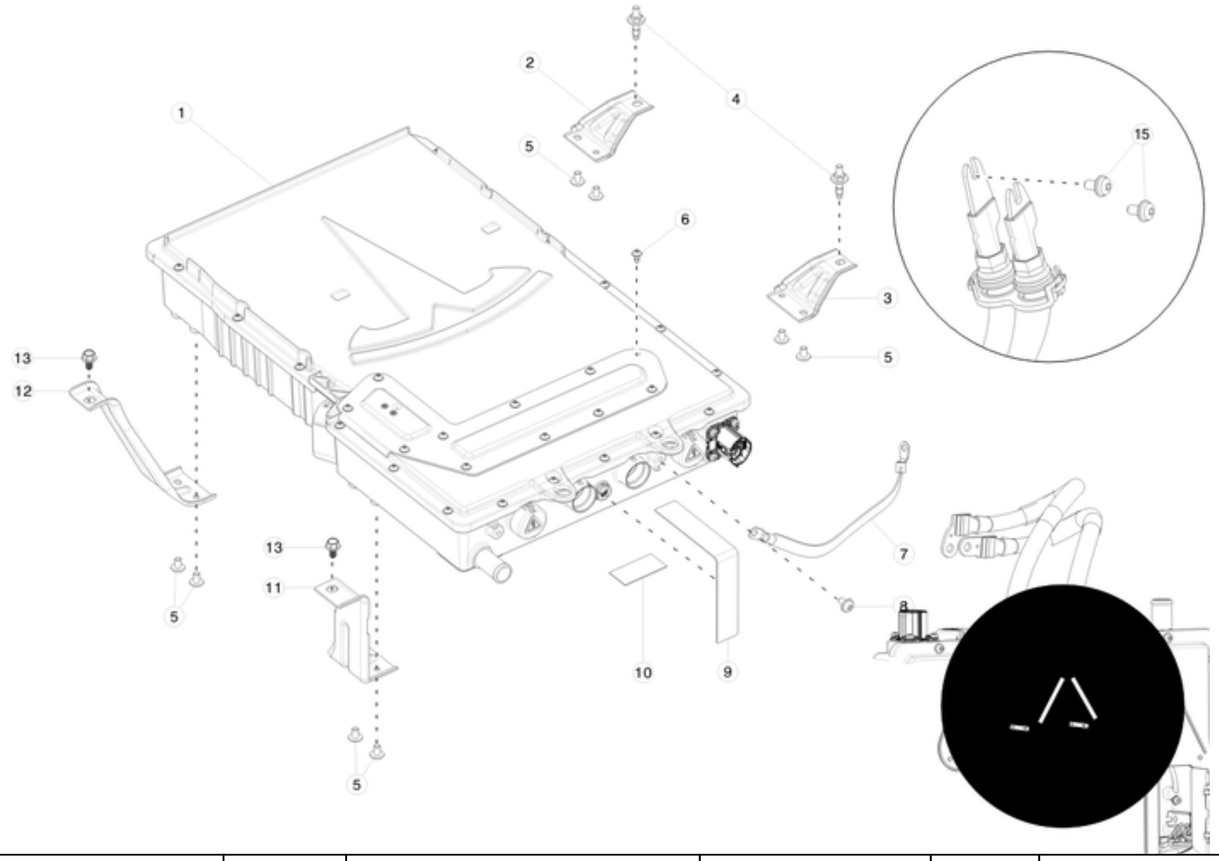

No	Part Name	Category	Part Description	Part Number	Qty	Comments
1	ASY,GEN3 CHRG SYS,72A,1PH	Unrestricted	ASY,GEN3 CHRG SYS,72A,1PH	1035647-00-E	1	COJP AND CH04, RENA AND CH04
1	ASY,GEN3 CHRG SYS,48A,1PH	Unrestricted	ASY,GEN3 CHRG SYS,48A,1PH	1035647-02-A	1	
2	BRKT,PH1IN,REAR,GEN3 CHGR TO MS2	Unrestricted	BRKT,PH1IN,REAR,GEN3 CHGR TO MS2	1071236-00-A	1	
3	BRKT,PH1IN,GEN3 CHGR TO MS2	Unrestricted	BRKT,PH1IN,GEN3 CHGR TO MS2	1065439-00-B	1	
4	BLT,DBL,HEX,M6x20&M6x10 M-S-09 ADH	Unrestricted	BLT,DBL,HEX,M6x20&M6x10 M-S-09 ADH	1075499-00-B	2	
5	BOLT,PF,M6x10,STL[10.9],ZNNI	Unrestricted	BOLT,PF,M6x10,STL[10.9],ZNNI	1061123-00-A	8	
6	BOLT PF 4x9 PC88 ECOFIX SEAL	Unrestricted	BOLT PF 4x9 PC88 ECOFIX SEAL	1039097-00-A	11	
7	W242,HV BATTERY,GND STRP,HV BATT_BIW	Unrestricted	W242,HV BATTERY,GND STRP,HV BATT_BIW	1017532-00-C	1	
8	SCR,M6-1.0X10,SCKT PAN WSHR HD,TORX,SST	Unrestricted	SCR,M6-1.0X10,SCKT PAN WSHR HD,TORX,SST	1011910-00-A	1	
9	LABEL, TAMPER EVIDENT	Unrestricted	LABEL, TAMPER EVIDENT	6001487	1	
10	LABEL,2x1,ID,PRINTED,SERIAL TRACKING,MES	Unrestricted	LABEL,2x1,ID,PRINTED,SERIAL TRACKING,MES	1081292-00-A	1	
11	BRKT,PH3OUT,GEN3 CHGR TO MS2	Unrestricted	BRKT,PH3OUT,GEN3 CHGR TO MS2	1065442-00-B	1	
12	BRKT,PH3IN,GEN3 CHGR TO MS2	Unrestricted	BRKT,PH3IN,GEN3 CHGR TO MS2	1065441-00-B	1	
13	BOLT,M6-1.0X12,FHCS,DIN6921,G10.9,ZF720	Unrestricted	BOLT,M6-1.0X12,FHCS,DIN6921,G10.9,ZF720	1008770-00-A	2	

14	NUT,HEX,KEPS,BELL,FLAT,M6,SST	Unrestricted	NUT,HEX,KEPS,BELL,FLAT,M6,SST	1054470-00-A	2	
15	SCR,M6-1,10,PH,TRX,CONWSHR,PATCH,SST	Unrestricted	SCR,M6-1,10,PH,TRX,CONWSHR,PATCH,SST	1057021-00-A	2	4 screws are needed for use in Europe, China, Australia, Hong Kong (Triple Phase Chargers)

ANTENNA - AM FM HD RADIO

AM FM Antennas and Amplifiers

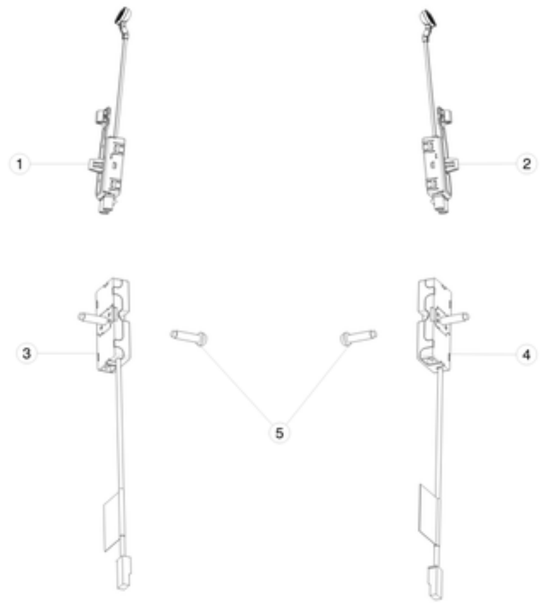

No	Part Name	Category	Part Description	Part Number	Qty	Comments
1	ANTENNA AMPLIFIER AM/FM1 RKE-NA EU APAC	Unrestricted	ANTENNA AMPLIFIER AM/FM1 RKE-NA EU APAC	1004793-00-F	1	1004793-00-F is fully interchangeable with 1004793-00-E and 1004793-00-D
2	ANTENNA AMPLIFIER, FM2 - NA EU APAC	Unrestricted	ANTENNA AMPLIFIER, FM2 - NA EU APAC	1004808-00-F	1	
3	ANTENNA, RF FILTER, LHS 2D label	Unrestricted	ANTENNA, RF FILTER, LHS 2D label	1012002-01-B	1	
4	ANTENNA, RF FILTER, RHS 2D label	Unrestricted	ANTENNA, RF FILTER, RHS 2D label	1012002-00-B	1	
5	SCR,M6-1.0X18,BH,STL 8.8,ZNC,W/PATCH	Unrestricted	SCR,M6-1.0X18,BH,STL 8.8,ZNC,W/PATCH	1004373-00-A	2	

ANTENNA - GPS

GPS Antenna

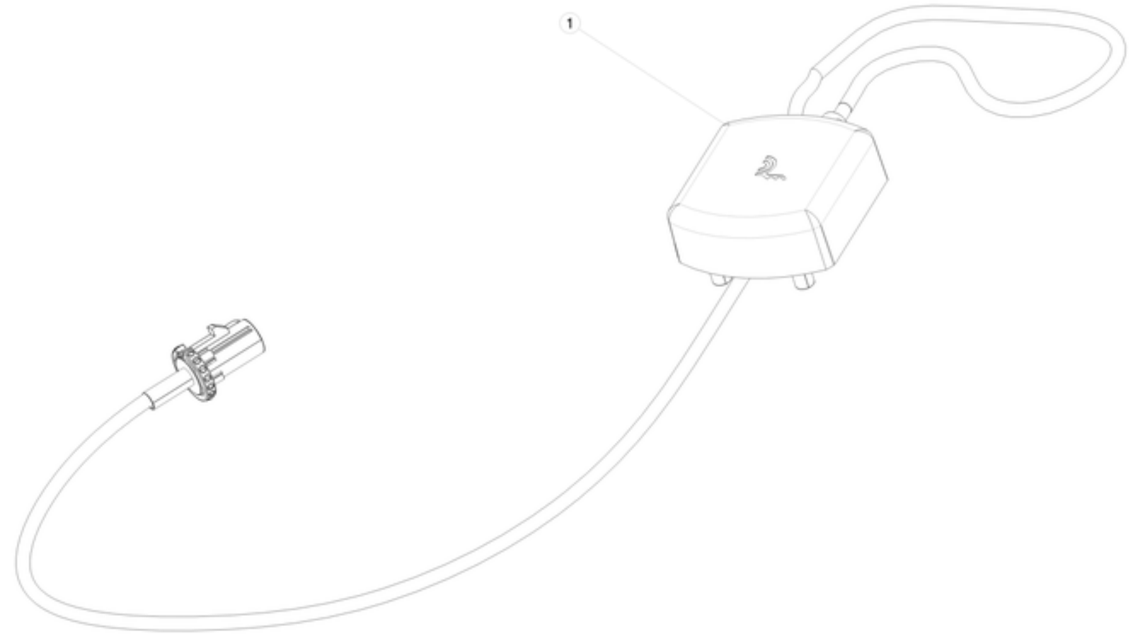

No	Part Name	Category	Part Description	Part Number	Qty	Comments
1	ANTENNA, GPS	Unrestricted	ANTENNA, GPS	1004794-00-B	1	For vehicles produced until October 12th, 2016. With option codes: DA01, DA02
1	Antenna, GNSS, WW, MS	Unrestricted	Antenna, GNSS, WW, MS	1097297-00-A	1	For vehicles produced on and after October 12th, 2016. With option codes: APH0, APH2

ANTENNA - GSM

GSM Antenna

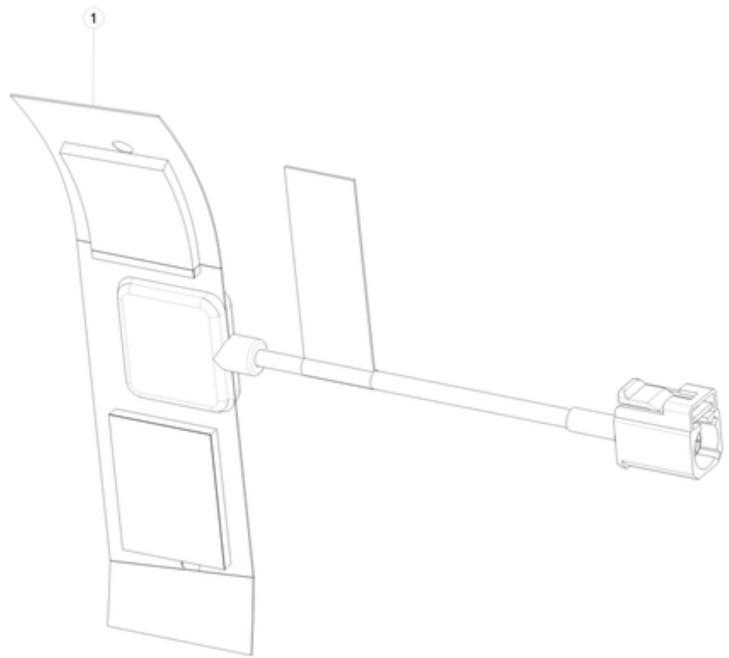

No	Part Name	Category	Part Description	Part Number	Qty	Comments
1	ANTENNA, GSM (3G)	Unrestricted	ANTENNA, GSM (3G)	NA	1	Only available w/ Exterior Mirror Assembly

ANTENNA - SATELLITE RADIO

Satellite Radio - Antenna

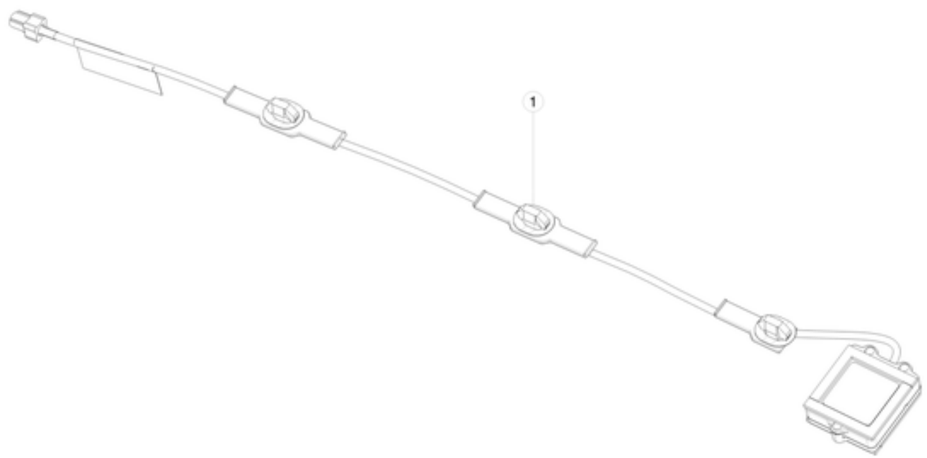

No	Part Name	Category	Part Description	Part Number	Qty	Comments
1	XM ANTENNA	Unrestricted	XM ANTENNA	1018362-00-A	1	For vehicles with option codes: X013 AND RFBC AND RENA, X013 AND RFBK AND RENA.
1	ANTENNA, SDARS-IOP, XM, MS	Unrestricted	ANTENNA, SDARS-IOP, XM, MS	1050256-00-B	1	For vehicles with option codes: RENA AND X013 AND RFP2

ANTENNA - WI-FI

WI-FI Antenna

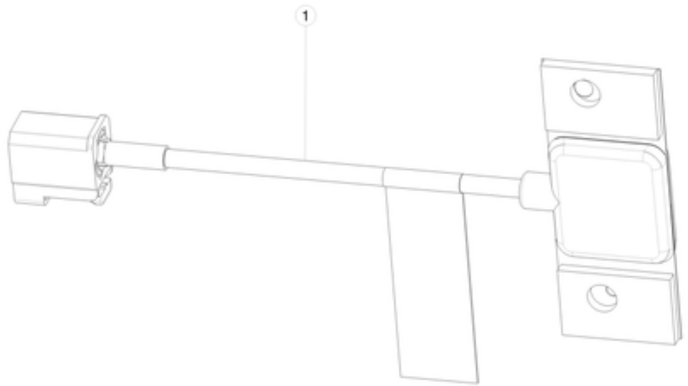

No	Part Name	Category	Part Description	Part Number	Qty	Comments
1	ANTENNA, WIFI	Unrestricted	ANTENNA, WIFI	NA	1	Only available w/ Exterior Mirror Assembly

AUDIO SYSTEM - AM FM HD RADIO

Radio

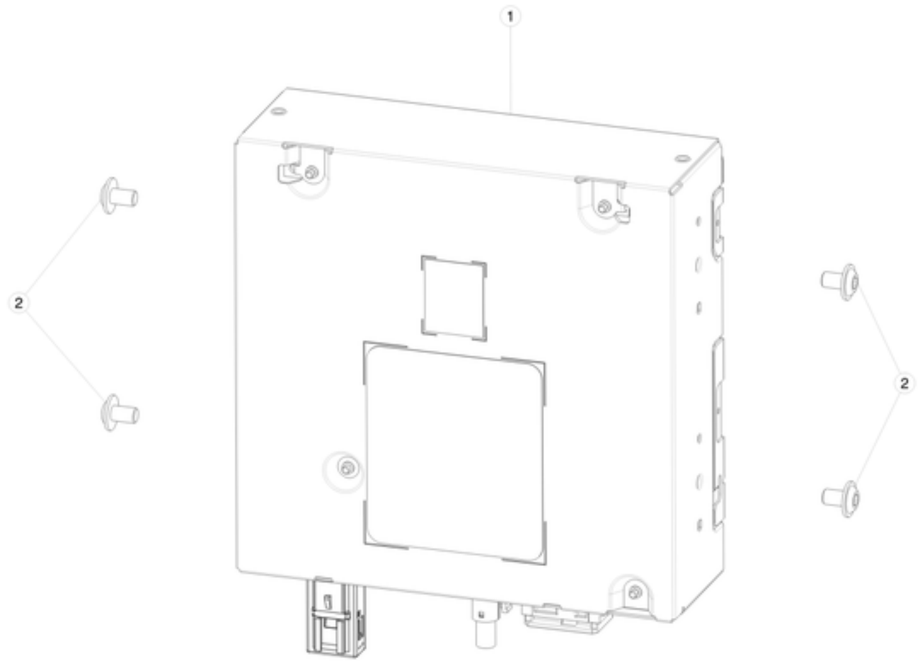

No	Part Name	Category	Part Description	Part Number	Qty	Comments
1	RADIO, NORTH AMERICA, PREMIUM, 500KB CAN	Unrestricted	RADIO, NORTH AMERICA, PREMIUM, 500KB CAN	1052322-00-B	1	1052322-00-B can replace 1004787-00-E
1	RADIO, NORTH AMERICA, BASE , 500KB CAN	Unrestricted	RADIO, NORTH AMERICA, BASE , 500KB CAN	1052323-00-B	1	1052323-00-Bcan replace 1004787-01-E
2	FASTENER, BOLT, TORX25, M5-0.8X8MM	Unrestricted	BOLT, TORX 25, M5-0.8X8MM	1009129-00-A	4	Use to install item #1. Order in quantities of 50; minimum order: 50.

AUDIO SYSTEM - BLUETOOTH

Bluetooth and Microphones

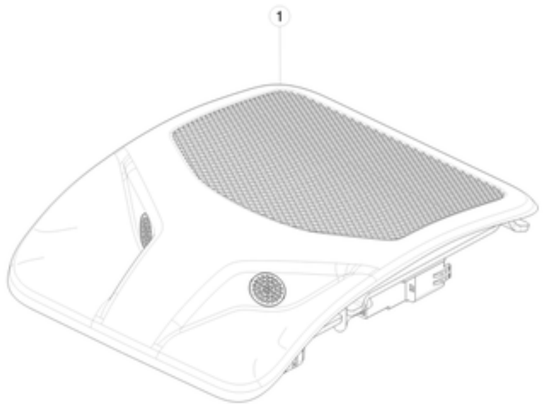

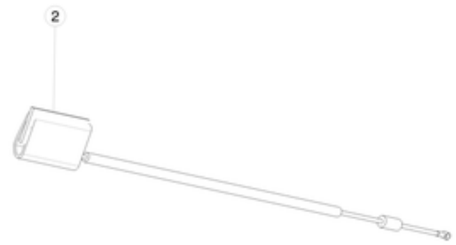

No	Part Name	Category	Part Description	Part Number	Qty	Comments
1	ASSY COMPLETE - OVERHEAD CONSOLE - FOG	Unrestricted	OVERHEAD CONSOLE ASSEMBLY - WHITE	1002404-00-B	1	includes microphone
1	ASSY COMPLETE - OVERHEAD CONSOLE - BLACK	Unrestricted	OVERHEAD CONSOLE ASSEMBLY - BLACK	1002404-02-B	1	includes microphone
1	ASSY COMPLETE - OVERHEAD CONSOLE - INTRSN SNSR FOG	Unrestricted	OVERHEAD CONSOLE ASSEMBLY WITH INTRUSION SENSOR - WHITE	1021099-00-B	1	includes microphone and intrusion sensor
1	ASSY COMPLETE - OVERHEAD CONSOLE - INTRSN SNSR BLACK	Unrestricted	OVERHEAD CONSOLE ASSEMBLY WITH INTRUSION SENSOR - BLACK	1021099-02-B	1	includes microphone and intrusion sensor
2	EXTERNAL BLUETOOTH ANTENNA ASSY	Unrestricted	EXTERNAL BLUETOOTH ANTENNA ASSY	1022386-00-A	1	
*	STRAIN RELIEF, CABLE	Unrestricted	STRAIN RELIEF, CABLE	1023743-00-A	1	
*	CLIP,EDGE HT PN 156-00865	Unrestricted	CLIP,EDGE HT PN 156-00865	1024295-00-A	1	

AUDIO SYSTEM - SPEAKERS, SUBWOOFER AND AMPLIFIER

Audio Speakers - Base

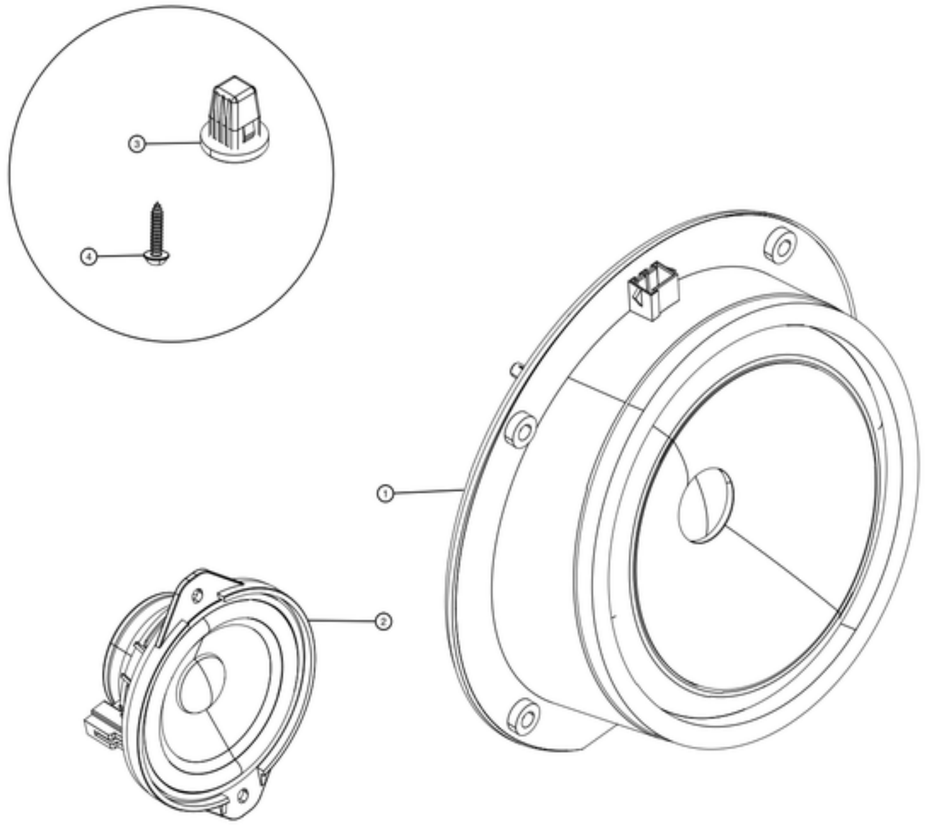

No	Part Name	Category	Part Description	Part Number	Qty	Comments
1	AUDIO - SPEAKER - MID WOOFER 160MM	Unrestricted	160MM SPEAKER	1004833-02-A	4	
2	AUDIO - SPEAKER - MID RANGE - 80MM	Unrestricted	80MM SPEAKER	1004833-01-A	1	
3	GROM, SCR, M5 SELF TAP, 0.8-2.5, 7MM SQ	Unrestricted	GROMMET, SCREW, M5 SELF-TAPPING	1003209-00-A	16	Use to install item #1. Order in quantities of 100; minimum order: 100.
4	SCR ,M5X16,TRX,10.9,ZnNi,PT,R point	Unrestricted	SCREW, TORX, M5X16, ZINC NICKEL	1012629-00-B	16	use to install item #1
*	BLT,TPG,TRX,BTN,ST4.2x1.4-20[SS]-S-01	Unrestricted	BOLT, TORX, BUTTON HEAD, M4.2x1.4	1014049-00-B	4	use to install item #2

Audio Speakers - Premium

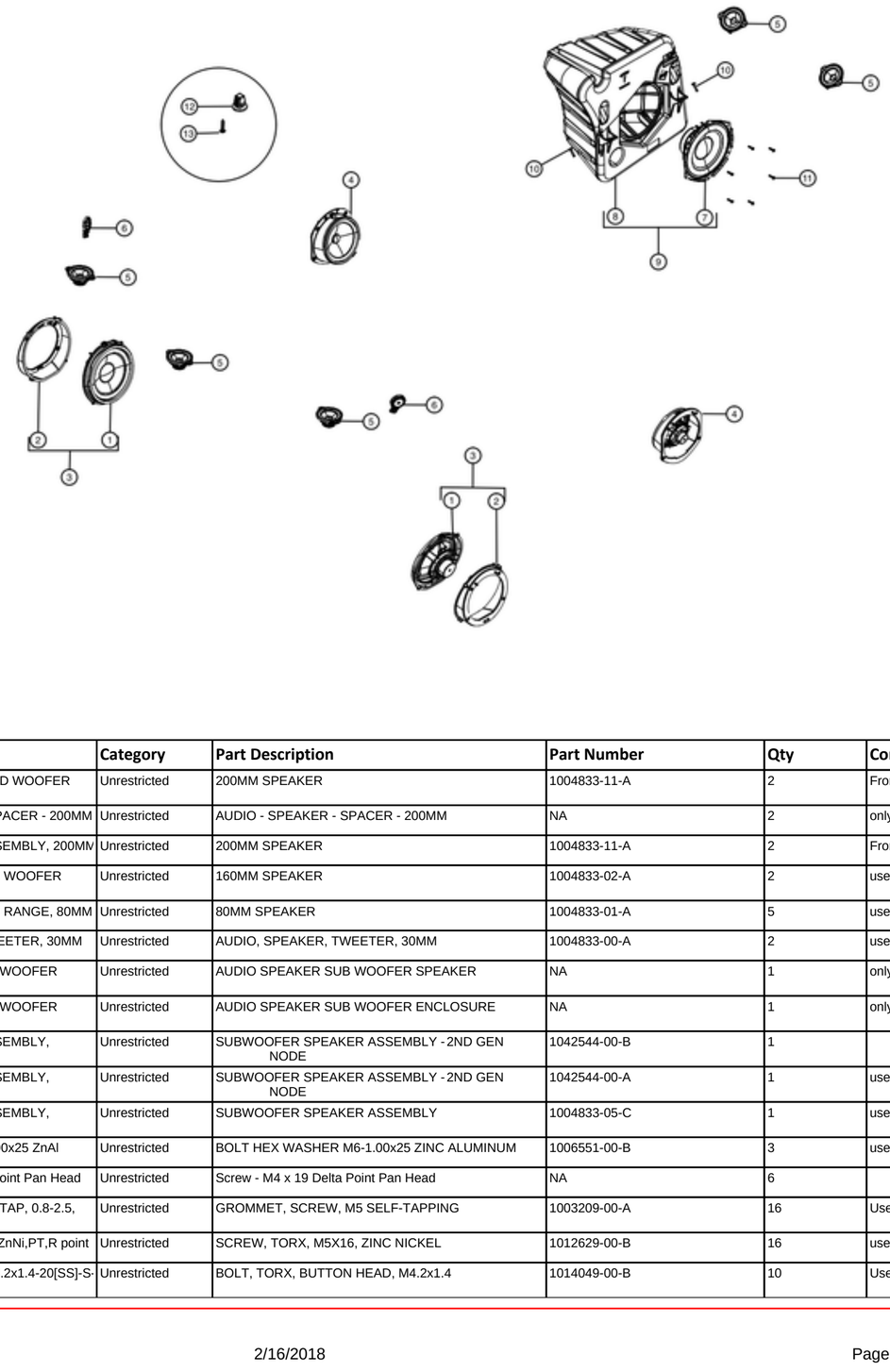

No	Part Name	Category	Part Description	Part Number	Qty	Comments
1	AUDIO - SPEAKER - MID WOOFER 200MM	Unrestricted	200MM SPEAKER	1004833-11-A	2	Front door speaker, contains 1004833-03-A speaker and 1004833-04-A spacer.
2	AUDIO - SPEAKER - SPACER - 200MM	Unrestricted	AUDIO - SPEAKER - SPACER - 200MM	NA	2	only available with item #1
3	AUDIO, SPEAKER, ASSEMBLY, 200MM	Unrestricted	200MM SPEAKER	1004833-11-A	2	Front door speaker, contains 1004833-03-A speaker and 1004833-04-A spacer.
4	AUDIO, SPEAKER, MID WOOFER SPEAKER 160MM	Unrestricted	160MM SPEAKER	1004833-02-A	2	use on Rear Door
5	AUDIO, SPEAKER, MID RANGE, 80MM	Unrestricted	80MM SPEAKER	1004833-01-A	5	use on dash and Tailgate
6	AUDIO, SPEAKER, TWEETER, 30MM	Unrestricted	AUDIO, SPEAKER, TWEETER, 30MM	1004833-00-A	2	use on A-Pillar
7	AUDIO SPEAKER SUB WOOFER SPEAKER	Unrestricted	AUDIO SPEAKER SUB WOOFER SPEAKER	NA	1	only available as part of item #9
8	AUDIO SPEAKER SUB WOOFER ENCLOSURE	Unrestricted	AUDIO SPEAKER SUB WOOFER ENCLOSURE	NA	1	only available as part of item #9
9	AUDIO, SPEAKER, ASSEMBLY, SUBWOOFER	Unrestricted	SUBWOOFER SPEAKER ASSEMBLY - 2ND GEN NODE	1042544-00-B	1	
9	AUDIO, SPEAKER, ASSEMBLY, SUBWOOFER	Unrestricted	SUBWOOFER SPEAKER ASSEMBLY - 2ND GEN NODE	1042544-00-A	1	use on vehicles manufactured on or after November 2nd, 2014
9	AUDIO, SPEAKER, ASSEMBLY, SUBWOOFER	Unrestricted	SUBWOOFER SPEAKER ASSEMBLY	1004833-05-C	1	use on vehicles manufactured before November 2nd, 2014
10	BLT HEX WSHR M6-1.00x25 ZnAl	Unrestricted	BOLT HEX WASHER M6-1.00x25 ZINC ALUMINUM	1006551-00-B	3	use to mount Subwoofer to trunk. ok to use A.
11	Screw - M4 x 19 Delta Point Pan Head	Unrestricted	Screw - M4 x 19 Delta Point Pan Head	NA	6	
12	GROM, SCR, M5 SELF TAP, 0.8-2.5, 7MM SQ	Unrestricted	GROMMET, SCREW, M5 SELF-TAPPING	1003209-00-A	16	Use on doors. Order in quantities of 100; minimum order: 100.
13	SCR ,M5X16,TRX,10.9,ZnNi,PT,R point	Unrestricted	SCREW, TORX, M5X16, ZINC NICKEL	1012629-00-B	16	use on item #3 and 4
*	BLT,TPG,TRX,BTN,ST4.2x1.4-20[SS]-S-01	Unrestricted	BOLT, TORX, BUTTON HEAD, M4.2x1.4	1014049-00-B	10	Use on item #5

*	SCR,M4.8-2.82x16mm,WH,HEX,POLYFAST.A	Unrestricted	SCREW, M4.82.82x16mm, POLYFAST WITH TYPE A TIP, WASHER HEAD, EXTERNAL HEX (7mm)	1016812-00-A	8	Use on item #1 and 2
*	AUDIO, AMPLIFIER, EXTERNAL, PREMIUM	Unrestricted	AUDIO, AMPLIFIER, EXTERNAL, PREMIUM	1004833-10-A	1	

AUDIO SYSTEM - USB MEDIA PORT

USB Hubs and Brackets

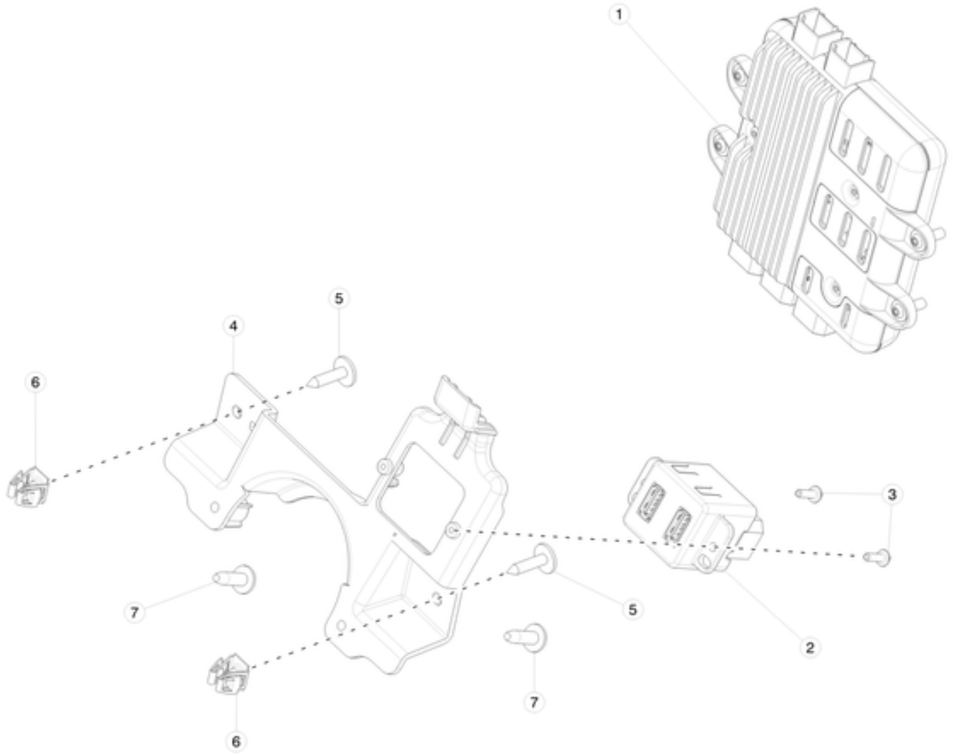

No	Part Name	Category	Part Description	Part Number	Qty	Comments
1	ASY, USB Hub with Wi-Fi	Unrestricted	ASY, USB Hub with Wi-Fi	1042829-00-C	1	
2	USB CONNECTOR	Unrestricted	USB CONNECTOR	1004815-01-B	1	
3	SCR,M3.0-1.12x10,Delta PT,TRX,ZnNi 1000	Unrestricted	SCR,M3.0-1.12x10,Delta PT,TRX,ZnNi 1000	1008307-00-A	2	
4	ADAPTER, PASSIVE, ENTRY SYSTEM	Unrestricted	ADAPTER, PASSIVE, ENTRY SYSTEM	1009245-00-D	1	
5	BLT,TPG,TRX,PFLG,M4.2x19x11.5[St]-01	Unrestricted	BLT,TPG,TRX,PFLG,M4.2x19x11.5[St]-01	1014049-00-B	2	
6	NUT PSH M4.2	Unrestricted	NUT PSH M4.2	1007116-00-A	2	
7	SCR ,M5X16,TRX,10.9,ZnNi,PT,R point	Unrestricted	SCR ,M5X16,TRX,10.9,ZnNi,PT,R point	1012629-00-B	2	

DISPLAYS

Instrument Cluster

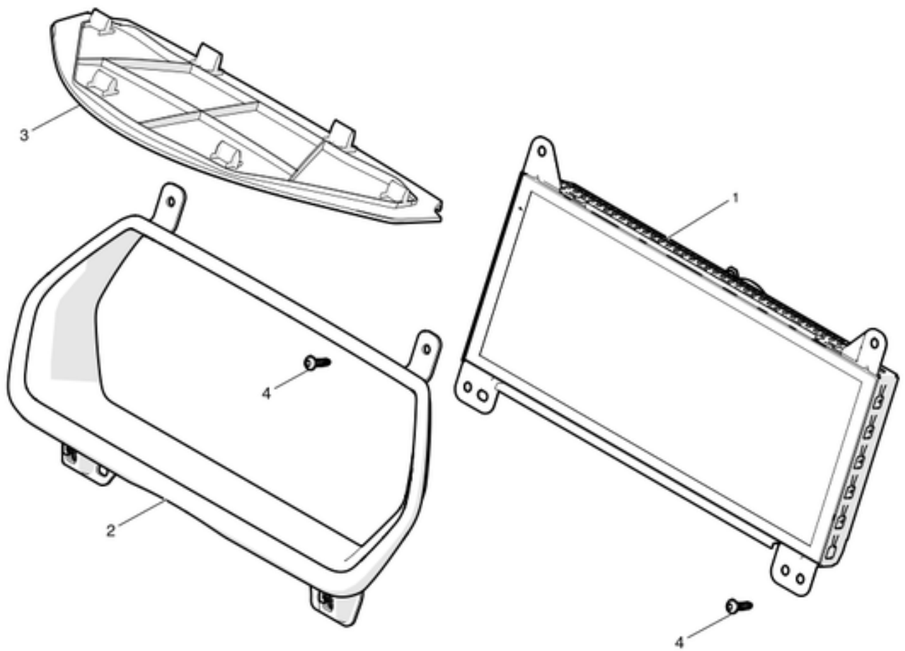

No	Part Name	Category	Part Description	Part Number	Qty	Comments
1	PREMIUM INSTRUMENT CLUSTER	Unrestricted	PREMIUM INSTRUMENT CLUSTER	1004788-00-F	1	
*	ASY,WIRE,IP TRIM GND,150MM	Unrestricted	INSTRUMENT PANEL TRIM GROUND WIRE ASSEMBLY - 150MM	1038450-00-A	1	
2	ASY CLUSTER BEZEL	Unrestricted	CLUSTER BEZEL ASSEMBLY	1033041-00-C	1	
3	ASY COVER BINNACLE LOWER	Unrestricted	BINNACLE COVER	1008500-00-D	1	Includes clips.
*	CLIP, TRIM, A-PNL 1.3, B-PNL 12.51	Unrestricted	TRIM CLIP 10.3MM X 10MM	1007722-00-A	4	Replacement clips for item #3.
4	BLT,TPG,TRX,BTN,ST4.2x1.4-20[SS]-S-01	Unrestricted	BOLT, TORX, BUTTON HEAD, M4.2x1.4	1014049-00-B	8	

MEDIA CONTROL UNIT (TOUCH SCREEN)

Touchscreen

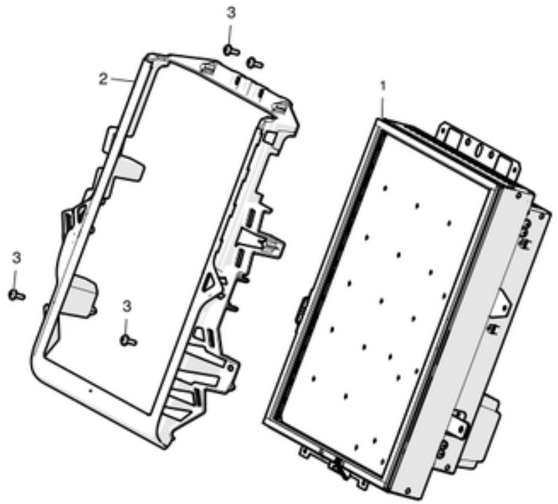

No	Part Name	Category	Part Description	Part Number	Qty	Comments
1	MCU, NORTH AMERICA PREMIUM AND GPS	Unrestricted	TOUCH SCREEN WITH NAVIGATION AND PREMIUM AUDIO AND LTE - NORTH AMERICA	1045006-00-E	1	For vehicles with Autopilot 2.0 or 2.5, built on and after October 12th, 2016. 1045006-00-E is fully interchangeable with 1045006-00-D
1	SERVICE MCU KIT 1045006 - NORTH AMERICA	Unrestricted	SERVICE MCU KIT 1045006- NORTH AMERICA For replacements of MCUs 1045006* on cars with AP 1.0	8764561-00-B	1	For vehicles built since December 21st, 2015 until December 15th, 2017. Use to replace 1045006-00-A, B, C
2	FRAME CENTER SCREEN	Unrestricted	CENTER SCREEN FRAME	1002294-00-H	1	
3	BLT,PFLG,TRX,M5x25[08.8]-05	Unrestricted	BOLT, TORX, M5x25	1008884-00-C	4	
*	PCBA, LTE CONNECTIVITY, UBLOX GPS	Unrestricted	PCBA, LTE CONNECTIVITY, UBLOX GPS	1054968-01-B	1	
*	EDGE CLIP CABLE TIE, 1-3MM PANEL	Unrestricted	EDGE CLIP CABLE TIE	1020965-00-A	1	Order in quantities of 50; minimum order: 50.
*	CABLE ASSY, HSD 450mm D-D KEY	Unrestricted	HSD CABLE ASSEMBLY - 450mm	1032108-00-A	1	
*	SWITCH, HAZARD, IP	Unrestricted	INSTRUMENT PANEL - HAZARD SWITCH	6008905-00-C	1	
*	SWITCH, GLOVE BOX, IP	Unrestricted	INSTRUMENT PANEL - GLOVE BOX SWITCH	6008906-00-C	1	
*	SIM CARD, JASPER	Unrestricted	SIM CARD - JASPER	1035347-00-A	1	3G and LTE for US, Canada, Japan and China.
*	SIM CARD, 4G/3G 64K, Teliasonera	Unrestricted	SIM CARD - 4G/3G - 64K - TELIASONERA	1030262-00-A	1	Teliasonera to be used with Denmark, Sweden, Finland, Estonia, Lithuania
*	MICRO SD CARD 16GB	Unrestricted	MICRO SD CARD - 16GB	1014633-00-B	1	Pre-loaded with maps.

INSTRUMENT PANEL

Dash Panel

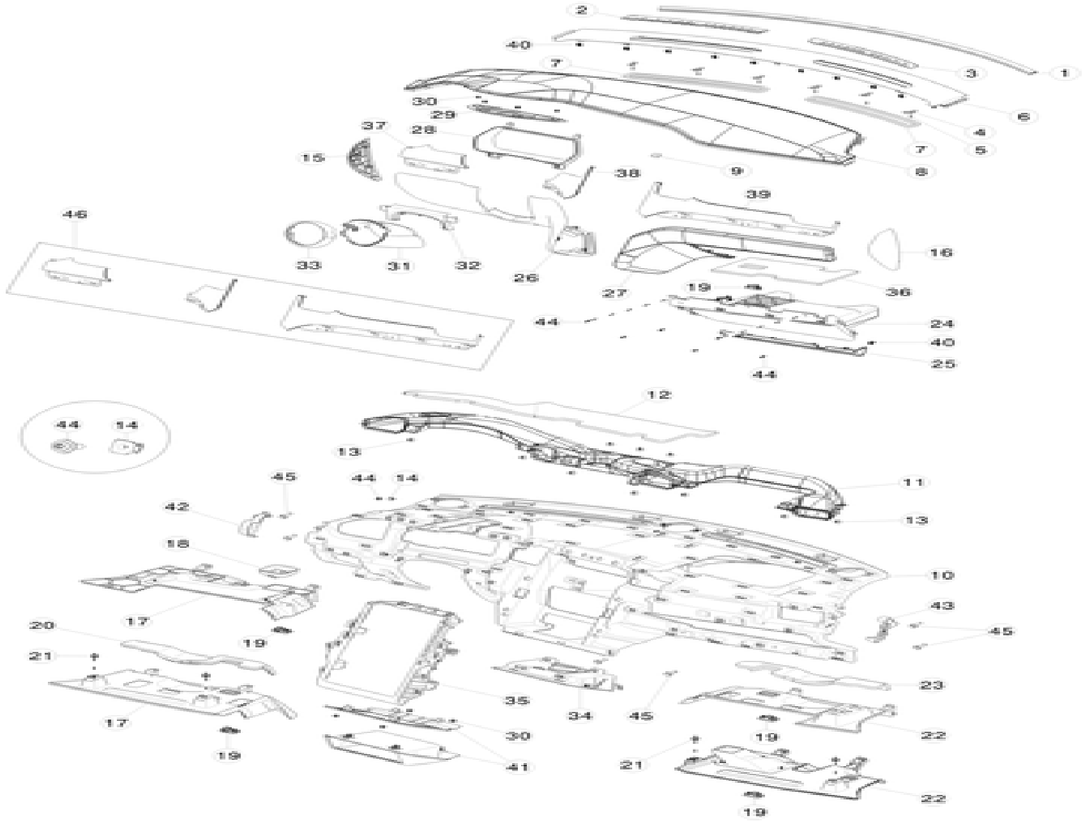

No	Part Name	Category	Part Description	Part Number	Qty	Comments
1	SEAL, WINDSHIELD EDGE	Unrestricted	WINDSHIELD EDGE SEAL	1004376-00-D	1	
2	DEFROSTER BEZEL OUTLET LH	Unrestricted	DEFROSTER OUTLET BEZEL LEFT	1023272-00-B	1	
3	DEFROSTER BEZEL OUTLET RH	Unrestricted	DEFROSTER OUTLET BEZEL RIGHT	1023273-00-B	1	
4	DEFROSTER BEZEL BRIDGE	Unrestricted	DEFROSTER BEZEL BRIDGE	1023274-00-B	6	
5	SCR PT TRX WSHR M4x1.46-12 ZnBlue	Unrestricted	SCREW TORX WASHER M4x1.46	1009344-00-A	6	
6	ASY MESH GRILLE DEFROST	Unrestricted	ASY MESH GRILL DEFROSTER	6007510-00-G	1	Updated grille defroster, does not have cut-outs for defroster bezels 1023272 and 1023273. Replaces 1023745-00-C.
7	SEAL MESH DEFROST	Unrestricted	SEAL MESH DEFROSTER	1007167-00-B	2	
8	ASY, TOP PAD IP COMPLETE, PUR/ALC BLK	Unrestricted	INSTRUMENT PANEL TOP PAD ASSEMBLY - PUR/ALCANTARA, BLACK	1060695-11-D	1	Option codes DSH7 and DRLH. Remove excess clip towers if they interfere with assembly. Replaces 1004397-07-O.
8	ASY, TOP PAD IP COMPLETE, PUR-B/ALC BLK	Unrestricted	INSTRUMENT PANEL TOP PAD ASSEMBLY - PUR-B/ALCANTARA, BLACK	1004397-11-P	1	OK to use 1004397-91-O
8	ASY,TOP PAD, LHD PUR/PUR BLACK	Unrestricted	INSTRUMENT PANEL TOP PAD ASSEMBLY - PUR AND PUR COWL IN BLACK - LEFT HAND DRIVE	1060695-10-D	1	For vehicles with option code: DSH5 and DRLH.
8	ASY, TOP PAD IP COMPLETE, PUR/PUR BLK	Unrestricted	INSTRUMENT PANEL TOP PAD ASSEMBLY - PUR-B/PUR-B, BLACK	1004397-10-P	1	OK to use 1004397-90-O
9	Top Pad Foam Standoff	Unrestricted	TOP PAD FOAM STANDOFF	1048228-00-A	1	
10	PLASTICS SUB ASY - IP CARRIER	Unrestricted	PLASTIC INSTRUMENT PANEL CARRIER COVER	1011184-00-I	1	

11	AIR DUCT	Unrestricted	AIR DUCT	1002275-00-D	1	
12	NVH, IP CARRIER	Unrestricted	NOISE VIBRATION HARSHNESS FOR INSTRUMENT PANEL CARRIER	1009476-00-E	1	
13	PUSH PIN 5.8x17 D17.8	Unrestricted	PUSH PIN 5.8x17 D17.8	1009115-00-A	10	Use to install 1011184-00-I
14	NUT, PUSH, M4.2	Unrestricted	NUT, PUSH, M4.2 x 1.41	1007116-00-A	21	Use to install 1011184-00-I. Order in quantities of 50; minimum order: 50.
15	ASY IP SIDE COVER LEFT	Unrestricted	LEFT INSTRUMENT PANEL SIDE COVER	1028357-00-A	1	Contains 1028359-00-A and 4 clips (1007818-00-A).
16	ASY IP SIDE COVER RIGHT	Unrestricted	RIGHT INSTRUMENT PANEL SIDE COVER	1028360-00-A	1	Contains 1028362-00-A and 4 clips (1007818-00-A).
17	PLASTICS SUB ASY - COVER FOOT WELL LEFT	Unrestricted	FOOTWELL COVER - LEFT	1016340-00-F	1	
18	ADAPTOR AIR DUCT LEFT	Unrestricted	AIR DUCT ADAPTER - LEFT	1007566-00-C	1	
19	LAMP, PUDDLE	Unrestricted	PUDDLE LAMP	1007151-00-D	2	
20	NVH, FOOTWELL PASSENGER RHD	Unrestricted	NOISE VIBRATION HARSHNESS, FOOTWELL PASSENGER - RIGHT HAND DRIVE	1039624-00-A	1	
21	NIFCO TRIM CLIP 12733	Unrestricted	NIFCO TRIM CLIP 12733	1011813-00-A	4	Order in quantities of 100; minimum order: 100.
22	PLASTICS SUB ASY - COVER FOOT WELL RIGHT	Unrestricted	FOOTWELL COVER - RIGHT	1016343-00-B	1	
23	NVH, FOOTWELL RIGHT	Unrestricted	NOISE VIBRATION HARSHNESS, FOOTWELL RIGHT	1009478-00-C	1	
24	ASY, GLOVE BOX COMP, LTHR BLK	Unrestricted	GLOVE BOX - LEATHER, BLACK	1003327-01-O	1	Installed on vehicles built between May 21, 2016 and August 18, 2017 with option codes: LT3B AND DRLH.
24	ASY GLOVE BOX COMP 13A PUR BLACK	Unrestricted	ASY GLOVE BOX COMP 13A PUR BLACK	1003327-21-O	1	For vehicles built on or after August 18, 2017 with option codes: LT5P AND DRLH
24	ASY, GLOVE BOX COMP, LTHR TAN	Unrestricted	GLOVE BOX - LEATHER TAN	1003327-02-O	1	Installed on vehicles built on or after June 2, 2016 with option codes: LT3T AND DRLH.
24	ASY GLOVE BOX COMP 13A PUR CREAM	Unrestricted	ASY GLOVE BOX COMP 13A PUR CREAM	1003327-22-O	1	For vehicles built on or after August 18, 2017 with option codes: LT5C AND DRLH
24	ASY, GLOVE BOX COMP, LTHR GREY	Unrestricted	GLOVE BOX - LEATHER, GREY	1003327-04-N	1	Installed on vehicles built on or after May 21, 2016 with option codes: LT3G AND DRLH.
24	ASY, GLOVE BOX COMP, PVC B BLACK	Unrestricted	GLOVE BOX ASSEMBLY - PVC B - BLACK	1003327-14-O	1	Installed on vehicles built on or after June 7, 2016 with option codes: LT00 AND DRLH AND CW00, LT00 AND DRLH AND CW02, LT1B AND DRLH, LT2B AND DRLH.
24	ASY, GLOVE BOX COMP, PVC B GREY	Unrestricted	GLOVE BOX ASSEMBLY - PVC B - GREY	1003327-15-N	1	Installed on vehicles built on or after June 7, 2016 with option codes: LT1G AND DRLH, LT2G AND DRLH.
24	ASY, GLOVE BOX COMP, PVC B TAN	Unrestricted	GLOVE BOX ASSEMBLY - PVC B - TAN	1003327-16-O	1	For vehicles built on or after June 16, 2016 with option codes: LT1T AND DRLH, LT2T AND DRLH.
25	ASY, IP LOWER GLOVE BOX, LTHR BLK	Unrestricted	LOWER GLOVE BOX - LEATHER BLACK	1002301-01-B	1	
25	ASY IP LOWER GLOVE BOX 13A BLACK	Unrestricted	ASY IP LOWER GLOVE BOX 13A BLACK	1002301-21-B	1	For vehicles built on or after August 18, 2017 with option codes: LT5P AND DRLH
25	ASY, IP LOWER GLOVE BOX, LTHR TAN	Unrestricted	LOWER GLOVE BOX - LEATHER TAN	1002301-02-B	1	
25	ASY IP LOWER GLOVE BOX 13A CREAM	Unrestricted	ASY IP LOWER GLOVE BOX 13A CREAM	1002301-22-B	1	For vehicles built on or after August 18, 2017 with option codes: LT5C AND DRLH
25	ASY, IP LOWER GLOVE BOX, LTHR GREY	Unrestricted	LOWER GLOVE BOX - LEATHER GREY	1002301-04-B	1	
25	ASSY IP LOWER GLOVE BOX PVC B BLACK	Unrestricted	INSTRUMENT PANEL LOWER GLOVE BOX ASSEMBLY - PVCB BLACK	1002301-14-B	1	
25	ASSY IP LOWER GLOVE BOX PVC B GREY	Unrestricted	INSTRUMENT PANEL LOWER GLOVE BOX ASSEMBLY - PVCB GREY	1002301-15-B	1	
25	ASSY IP LOWER GLOVE BOX PVC B TAN	Unrestricted	INSTRUMENT PANEL LOWER GLOVE BOX ASSEMBLY - PVCB TAN	1002301-16-B	1	
26	ASSY IP LOWER LEFT LTHR BLACK	Unrestricted	LOWER LEFT INSTRUMENT PANEL - LEATHER BLACK	1002405-01-H	1	
26	ASY IP LOWER LEFT 13A PUR BLACK	Unrestricted	ASY IP LOWER LEFT 13A PUR BLACK	1002405-21-H	1	For vehicles built on or after August 18, 2017 with option codes: LT5P AND DRLH
26	ASSY IP LOWER LEFT LTHR TAN	Unrestricted	LOWER LEFT INSTRUMENT PANEL - LEATHER TAN	1002405-02-H	1	
26	ASY IP LOWER LEFT 13A PUR CREAM	Unrestricted	ASY IP LOWER LEFT 13A PUR CREAM	1002405-22-H	1	For vehicles built on or after August 18, 2017 with option codes: LT5C AND DRLH
26	ASSY IP LOWER LEFT LTHR GREY	Unrestricted	LOWER LEFT INSTRUMENT PANEL - LEATHER GREY	1002405-04-G	1	
26	ASSY IP LOWER LEFT PVCB BLACK	Unrestricted	LOWER LEFT INSTRUMENT PANEL - PVC B BLACK	1002405-14-H	1	
26	ASSY IP LOWER LEFT PVCB GREY	Unrestricted	LOWER LEFT INSTRUMENT PANEL - PVCB GREY	1002405-15-G	1	
26	ASSY IP LOWER LEFT PVCB TAN	Unrestricted	LOWER LEFT INSTRUMENT PANEL - PVC B TAN	1002405-16-H	1	

27	ASY, IP LOWER RIGHT, LTHR BLK	Unrestricted	LOWER RIGHT INSTRUMENT PANEL - LEATHER BLACK	1002310-01-E	1	
27	ASY IP LOWER RIGHT 13A PUR BLACK	Unrestricted	ASY IP LOWER RIGHT 13A PUR BLACK	1002310-21-E	1	For vehicles built on or after August 18, 2017 with option codes: LT5P AND DRLH
27	ASY, IP LOWER RIGHT, LTHR TAN	Unrestricted	LOWER RIGHT INSTRUMENT PANEL - LEATHER TAN	1002310-02-E	1	
27	ASY IP LOWER RIGHT 13A PUR CREAM	Unrestricted	ASY IP LOWER RIGHT 13A PUR CREAM	1002310-22-E	1	For vehicles built on or after August 18, 2017 with option codes: LT5C AND DRLH
27	ASY, IP LOWER RIGHT, LTHR GREY	Unrestricted	LOWER RIGHT INSTRUMENT PANEL - LEATHER GRAY	1002310-04-D	1	
27	ASSY IP LOWER RIGHT PVC B BLACK	Unrestricted	INSTRUMENT PANEL LOWER RIGHT ASSEMBLY - PVCB BLACK	1002310-14-E	1	
27	ASSY IP LOWER RIGHT PVC B GREY	Unrestricted	INSTRUMENT PANEL LOWER RIGHT ASSEMBLY - PVCB GREY	1002310-15-D	1	
27	ASSY IP LOWER RIGHT PVC B TAN	Unrestricted	INSTRUMENT PANEL LOWER RIGHT ASSEMBLY - PVCB TAN	1002310-16-E	1	
29	ASY COVER BINNACLE LOWER	Unrestricted	BINNACLE COVER	1008500-00-D	1	Includes clips.
30	CLIP, TRIM, A-PNL 1.3, B-PNL 12.51	Unrestricted	TRIM CLIP 10.3MM X 10MM	1007722-00-A	8	
31	STEERING COLUMN Cover	Unrestricted	STEERING COLUMN COVER - FRONT	6007711-00-D	1	
32	STEERING COLUMN GAP HIDER	Unrestricted	STEERING COLUMN GAP HIDER	1008303-91-D	1	
33	STEERING COLUMN COVER REAR (Trim Ring)	Unrestricted	STEERING COLUMN COVER - REAR	1007009-00-C	1	
34	ASY BIN STORAGE CENTER COMPARTMENT	Unrestricted	CENTER COMPARTMENT BIN STORAGE ASSEMBLY	1002273-00-C	1	
35	FRAME CENTER SCREEN	Unrestricted	CENTER SCREEN FRAME	1002294-00-H	1	
36	NVH - GLOVE BOX	Unrestricted	NOISE VIBRATION HARSHNESS GLOVE BOX	1009475-00-B	1	
37	FINISHER IP LEFT CARBON FIBER	Unrestricted	INSTRUMENT PANEL, FINISHER LEFT CARBON FIBER	NA	1	only available in kit number 1004518-04-F
37	FINISHER IP LEFT OBECHE OPEN PORE (HORIZONTAL)	Unrestricted	INSTRUMENT PANEL, FINISHER LEFT OBECHE OPEN PORE (HORIZONTAL)	NA	1	only available in kit number 1004518-07-F
37	FINISHER IP LEFT OBECHE GLOSSY (HORIZONTAL)	Unrestricted	INSTRUMENT PANEL, FINISHER LEFT OBECHE GLOSSY (HORIZONTAL)	NA	1	only available in kit number 1004518-08-F
38	FINISHER IP CENTER CARBON FIBER	Unrestricted	INSTRUMENT PANEL, FINISHER CENTER CARBON FIBER	NA	1	only available in kit number 1004518-04-F
38	FINISHER IP CENTER OBECHE OPEN PORE (HORIZONTAL)	Unrestricted	INSTRUMENT PANEL, FINISHER CENTER OBECHE OPEN PORE (HORIZONTAL)	NA	1	only available in kit number 1004518-07-F
38	FINISHER IP CENTER OBECHE GLOSSY (HORIZONTAL)	Unrestricted	INSTRUMENT PANEL, FINISHER CENTER OBECHE GLOSSY (HORIZONTAL)	NA	1	only available in kit number 1004518-08-F
39	FINISHER IP RIGHT CARBON FIBER	Unrestricted	INSTRUMENT PANEL, FINISHER RIGHT CARBON FIBER	NA	1	only available in kit number 1004518-04-F
39	FINISHER IP RIGHT OBECHE OPEN PORE (HORIZONTAL)	Unrestricted	INSTRUMENT PANEL, FINISHER RIGHT OBECHE OPEN PORE (HORIZONTAL)	NA	1	only available in kit number 1004518-07-F
39	FINISHER IP RIGHT OBECHE GLOSSY (HORIZONTAL)	Unrestricted	INSTRUMENT PANEL, FINISHER RIGHT OBECHE GLOSSY (HORIZONTAL)	NA	1	only available in kit number 1004518-08-F
40	ERGO CLIP, 2.5 - 3.00 PNL, 12 W, 16 L	Unrestricted	ERGO CLIP, 2.5 - 3.00 PANEL, 12MM WIDE, 16MM LONG	1007818-00-B	26	Use to install item #3. Order in quantities of 50; minimum order: 50.
41	ASY - IP CUBBY	Unrestricted	INSTRUMENT PANEL CUBBY ASSEMBLY	1018893-00-E	1	
41	ASY, COVER, CENTER COMPARTMENT	Unrestricted	CENTER COMPARTMENT COVER ASSEMBLY	1045057-00-C	1	
42	Support Bracket, IP Side Cover Left	Unrestricted	INSTRUMENT PANEL SIDE COVER SUPPORT BRACKET - LEFT	1026910-00-B	1	
43	Support Bracket, IP Side Cover Right	Unrestricted	INSTRUMENT PANEL SIDE COVER SUPPORT BRACKET - RIGHT	1028405-00-A	1	
44	BLT,TPG,TRX,BTN,ST4.2x1.4-20[SS]-S-01	Unrestricted	BOLT, TORX, BUTTON HEAD, M4.2x1.4	1014049-00-B	53	Use to install the glove box
45	BLT HEX FL M8-1.25X25 8.8 -M-ZnAl	Unrestricted	BOLT HEX FLAT HEAD M8-1.25X25 ZINC ALUMINUM	1005805-00-A	9	
46	IP FINISHER TRIM SET CARBON FIBER	Unrestricted	INSTRUMENT PANEL FINISHER ASSEMBLY - COMPLETE SET CARBON FIBER	1004518-04-G	1	For vehicles with option codes: IDCF AND DRLH.
46	ASY IP FINISH TRIM SET OBECHE OPEN PORE (HORIZONTAL)	Unrestricted	INSTRUMENT PANEL FINISHER ASSEMBLY - COMPLETE SET WOOD OPEN PORE - HORIZONTAL	1004518-07-G	1	For vehicles with option codes: IDHM AND DRLH.

46	ASY IP FINISH TRIM SET OBECHE GLOSSY (HORIZONTAL)	Unrestricted	INSTRUMENT PANEL FINISHER ASSEMBLY - COMPLETE SET WOOD GLOSSY - HORIZONTAL	1045969-08-B	1	For vehicles with option codes: IDHG AND DRLH.
46	ASY IP FINISH TRIM SET PIANO BLACK LHD	Unrestricted	INSTRUMENT PANEL FINISHER ASSEMBLY - PIANO BLACK LEFT HAND DRIVE	1045969-03-B	1	For vehicles with option codes: IDPB AND DRLH.
46	ASY IP FINISH TRIM SET DARK ASH LHD	Unrestricted	INSTRUMENT PANEL FINISHER ASSEMBLY - DARK ASH - LEFT HAND DRIVE	1045969-10-B	1	For vehicles with option codes: IDBA AND DRLH.
46	ASY IP FINISH TRIM SET FIGURED ASH LHD	Unrestricted	INSTRUMENT PANEL FINISHER ASSEMBLY - FIGURED ASH - LEFT HAND DRIVE	1004518-99-H	1	For vehicles with option codes: IDBO AND DRLH.

Dash Support Frame

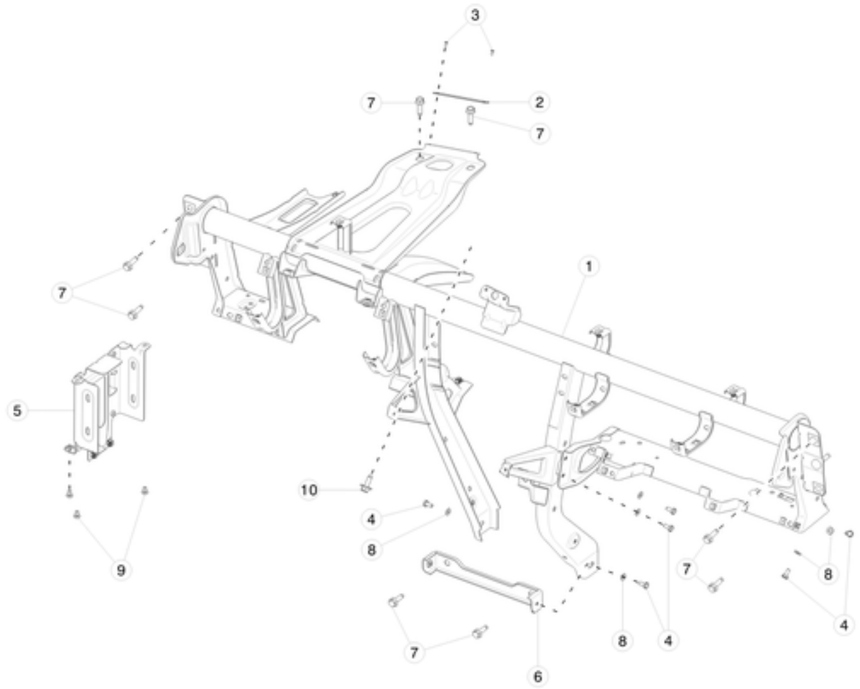

No	Part Name	Category	Part Description	Part Number	Qty	Comments
1	BEAM ASY-CROSS CAR IP REINF (COMP)	Unrestricted	REINFORCED INSTRUMENT PANEL CROSS CAR BEAM ASSEMBLY	No longer available	1	For vehicles built before October 17, 2016 with option codes DA01 or DA02. Please use 1060362-00-B and 1027811-00-F.
1	BEAM ASY-CROSS CAR IP REINF (COMP)	Unrestricted	REINFORCED INSTRUMENT PANEL CROSS CAR BEAM ASSEMBLY	1060362-00-B	1	For vehicles built on or after October 17, 2016 with option codes APH0 or APH2.
2	VIN PLATE	Unrestricted	VIN PLATE	1006865-00-B	1	Must specify full vin number when ordering.
3	DOMED HEAD ALUMINUM POP RIVET - DIAMTER 3.2MM	Unrestricted	DOMED HEAD ALUMINUM POP RIVET - DIAMTER 3.2MM	1006824-00-A	2	Use on Vin Plate
4	BLT, HEX M6 x 14 ZnAl	Unrestricted	BOLT, HEX M6 x 14 ZINC ALUMINUM	1011347-00-A	6	Use on knee airbag bracket
5	ASY - BRKT - AMP AND TUNER COMP	Unrestricted	AMPLIFIER AND TUNER BRACKET ASSEMBLY	1009126-00-E	1	
6	ASY - BRKT - DOWN CHANNEL BOTTOM	Unrestricted	DOWN CHANNEL BOTTOM BRACKET ASSEMBLY	1010342-00-C	1	
7	BLT HEX FL M8-1.25X25 8.8 -M-ZnAl	Unrestricted	BOLT HEX FLAT HEAD M8-1.25X25 ZINC ALUMINUM	1005805-00-A	8	
8	WSHR CNCL SPRNG M6x14x1.5 ZnAl	Unrestricted	WASHER SPRING M6x14x1.5 ZINC ALUMINUM	1007042-00-A	2	
9	Fastener, Screw, Torx30, M6-1.00x10mm	Unrestricted	SCREW, TORX30, M6-1.00x10mm	1006772-00-A	3	
10	BLT HF M8-1.25x28[9.8]ZnAl	Unrestricted	BOLT M8-1.25X25 MATPOINT SERRATED ZINC ALUMINUM BLACK	2007212-00-C	1	Order in quantities of 50; minimum order: 50.

Interior Ducting and Vents

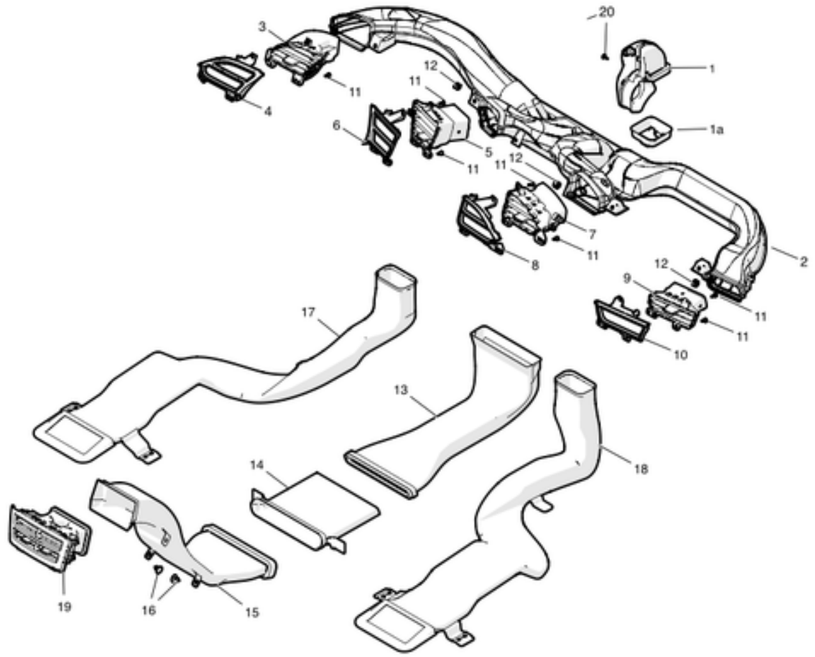

No	Part Name	Category	Part Description	Part Number	Qty	Comments
1	DUCT- ADAPTOR - DR	Unrestricted	DEFROST DUCT UPPER	1008282-00-B	1	
1a	ADAPTOR AIR DUCT LEFT	Unrestricted	AIR DUCT ADAPTER - LEFT	1007566-00-C	1	
2	AIR DUCT	Unrestricted	AIR DUCT	1002275-00-D	1	
3	ASY AIR OUTLET LEFT	Unrestricted	AIR OUTLET LEFT	1096877-00-A	1	If replacing previous part number, must replace all four airvents.
4	ASY IP AIRVENT RING LEFT LHD	Unrestricted	AIRVENT RING - LEFT - LEFT HAND DRIVE	1061731-00-B	1	
5	ASY AIR OUTLET CENTER LEFT	Unrestricted	AIR OUTLET CENTER ASSEMBLY - LEFT	1096878-00-A	1	If replacing previous part number, must replace all four airvents.
6	ASY IP AIRVENT RING CENTER LEFT LHD	Unrestricted	AIRVENT RING - CENTER LEFT - LEFT HAND DRIVE	1061732-00-B	1	
7	ASY AIR OUTLET CENTER RIGHT	Unrestricted	AIR OUTLET CENTER ASSEMBLY - RIGHT	1096879-00-A	1	If replacing previous part number, must replace all four airvents.
8	ASY IP AIRVENT RING CENTER RIGHT LHD	Unrestricted	AIRVENT RING - CENTER RIGHT - LEFT HAND DRIVE	1061733-00-B	1	
9	ASY AIR OUTLET RIGHT	Unrestricted	AIR OUTLET ASSEMBLY - RIGHT	1096880-00-A	1	If replacing previous part number, must replace all four airvents.
10	ASY IP AIRVENT RING RIGHT LHD	Unrestricted	AIRVENT RING - RIGHT - LEFT HAND DRIVE	1061734-00-B	1	
11	SCR PT TRX WSHR M4x1.46-12 ZnBlue	Unrestricted	SCREW TORX WASHER M4x1.46	1009344-00-A	12	
12	NUT PSH M4.2	Unrestricted	NUT, PUSH, M4.2 x 1.41	1007116-00-A	12	Order in quantities of 50; minimum order: 50.
13	ASY - AIR DUCT CENTER CONSOLE FRONT	Unrestricted	CENTER CONSOLE AIR DUCT ASSEMBLY - FRONT	1008281-00-E	1	
14	ASY - DUCT - CNTR - CENTER CONSOLE	Unrestricted	CENTER CONSOLE AIR DUCT ASSEMBLY	1008302-00-D	1	

15	ASY - AIR DUCT - CNTR CONSOLE - RR	Unrestricted	CENTER CONSOLE AIR DUCT ASSEMBLY - REAR	1008221-00-D	1	
16	PUSH PIN 5.8x17 D17.8	Unrestricted	PUSH PIN 5.8x17 D17.8	1009115-00-A	4	
17	ASY - AIR DUCT - FLOOR - LH	Unrestricted	FLOOR AIR DUCT ASSEMBLY - LEFT	1008449-00-F	1	
18	ASY - AIR DUCT - FLOOR - RH	Unrestricted	FLOOR AIR DUCT ASSEMBLY - RIGHT	1008450-00-F	1	
19	AIR OUTLET CENTER CONSOLE	Unrestricted	AIR OUTLET - CENTER CONSOLE	6006016-00-D	1	

CARPETING AND MATS

Interior Sound Insulation

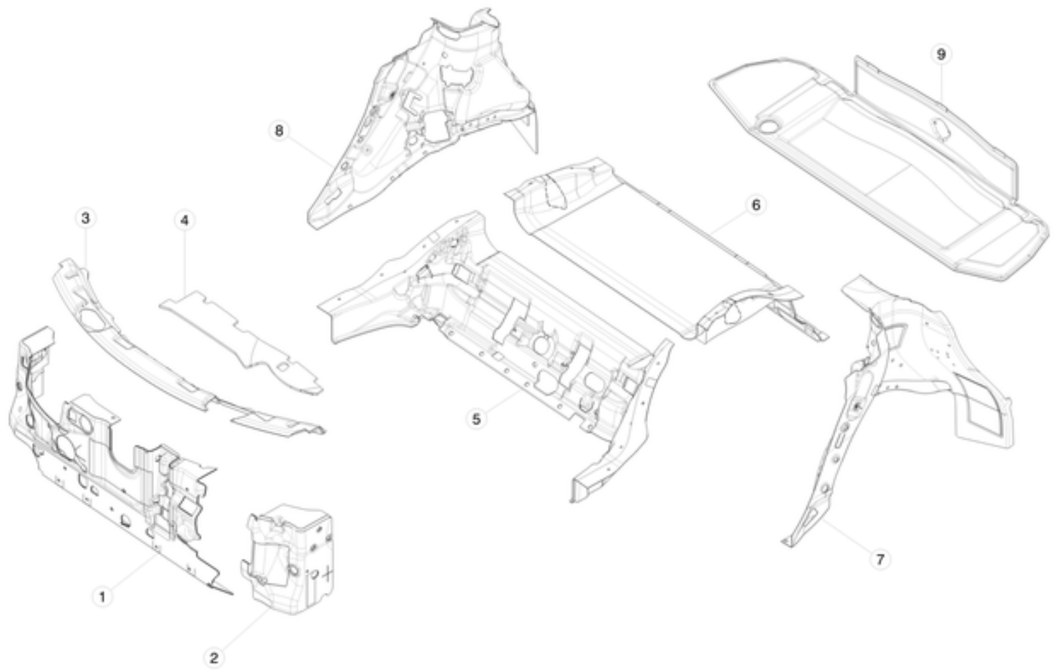

No	Part Name	Category	Part Description	Part Number	Qty	Comments
1	Dash Insulator RH	Unrestricted	DASHBOARD INSULATOR - RIGHT	1046732-00-C	1	
2	Dash Insulator LH	Unrestricted	DASHBOARD INSULATOR - LEFT	1046734-00-C	1	
3	Plenum Insulator	Unrestricted	PLENUM INSULATOR	1046737-00-A	1	
4	NVH, IP CARRIER	Unrestricted	NOISE VIBRATION HARSHNESS FOR INSTRUMENT PANEL CARRIER	1009476-00-E	1	
5	MOTOR BAY COVER INNER FRONT	Unrestricted	MOTOR BAY COVER - INNER FRONT	1045233-00-D	1	
6	MOTOR BAY COVER INNER REAR	Unrestricted	MOTOR BAY COVER - INNER REAR	1045234-00-C	1	
7	REAR WHEELHOUSE ABSORBER LH	Unrestricted	WHEELHOUSE ABSORBER - LEFT REAR	1045213-00-C	1	
8	REAR WHEELHOUSE ABSORBER RH SUBWFR	Unrestricted	WHEELHOUSE ABSORBER WITH SUBWOOFER - RIGHT REAR	1045214-00-C	1	
9	REAR TRUNK ABSORBER	Unrestricted	REAR TRUNK ABSORBER	6008721-00-C	1	

Passenger Compartment Carpet

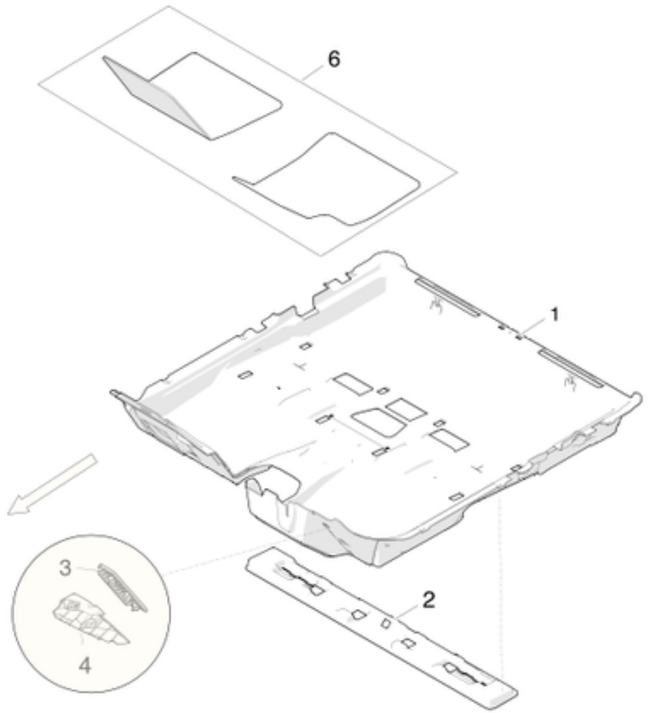

No	Part Name	Category	Part Description	Part Number	Qty	Comments
1	PRIMARY CARPET - PASSENGER COMPARTMENT	Unrestricted	PASSENGER COMPARTMENT PRIMARY CARPET	1047582-00-D	1	
*	ASY, 2ND ROW CUP-HOLDER (pair set)	Unrestricted	2ND ROW CUP-HOLDER - SET	1030388-00-A	1	
3	FOOT REST, DRIVER	Unrestricted	FOOTREST - DRIVER	6005968-00-C	1	
4	FOOTREST DEAD PEDAL	Unrestricted	FOOTREST - DEAD PEDAL	1104861-00-A	1	OK to replace 1007280-00-A.
6	MODEL S LHD FLOOR MAT SET	Unrestricted	FLOOR MAT KIT	1047686-00-B	1	
*	FLOOR MAT ATTACHMENT	Unrestricted	FLOOR MAT ATTACHMENT	1037078-00-A	8	Use to hold floor mats to carpet.
*	BRUSH CLIP 6MM, 30.5MM, OD20	Unrestricted	BRUSH CLIP 6MM X 30.5MM, 20MM OUTSIDE DIAMETER	1010499-00-A	3	Order in quantities of 50; minimum order: 50.

Trunk Carpet and Side Finishers

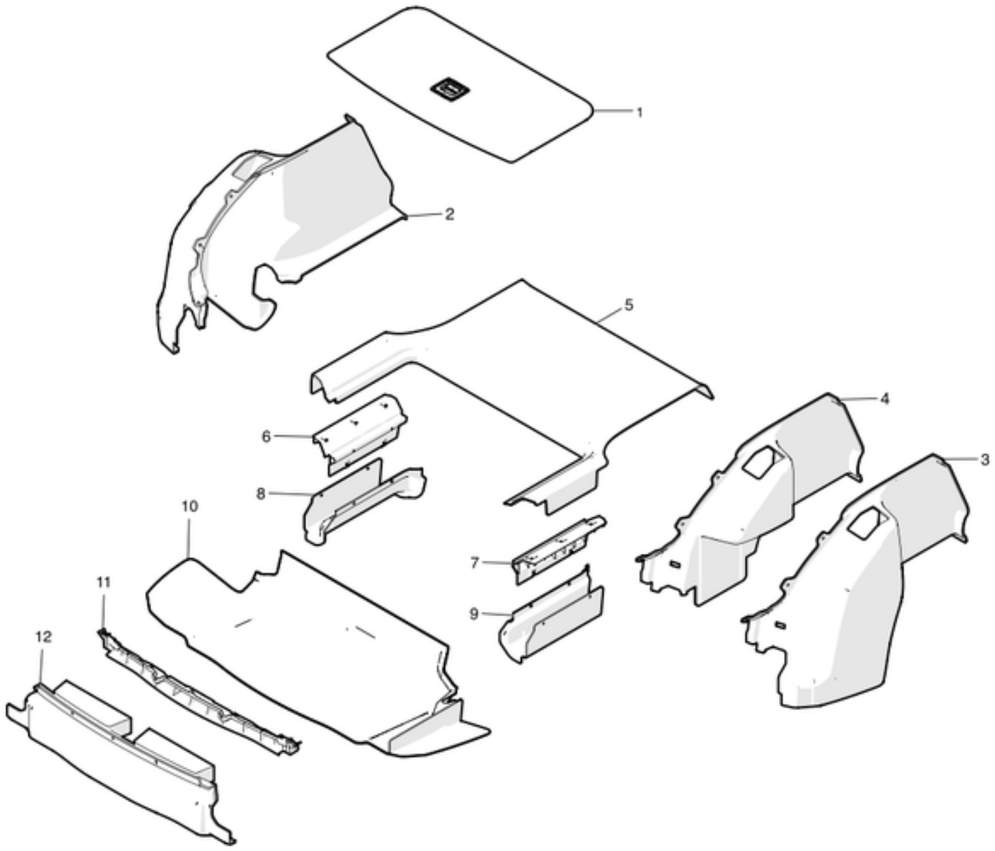

No	Part Name	Category	Part Description	Part Number	Qty	Comments
1	TRUNK LOADFLOOR	Unrestricted	TRUNK LOADFLOOR	1005534-00-F	1	
2	ASY - TRUNK SIDE TRIM LH, NO LAMP	Unrestricted	TRUNK SIDE TRIM ASSEMBLY WITHOUT LAMPS - LEFT	1025978-00-C	1	
2	ASY - TRUNK SIDE TRIM LH, NO LAMP	Unrestricted	TRUNK SIDE TRIM ASSEMBLY WITHOUT LAMPS - LEFT	1045201-00-C	1	
2	ASY - TRUNK SIDE TRIM LH 3ROW	Unrestricted	TRUNK SIDE TRIM ASSEMBLY WITH 3RD ROW - LEFT	1018355-00-E	1	
*	CHARGE PORT COVER TRIM	Unrestricted	CHARGE PORT COVER TRIM	1051663-00-A	1	
3	ASY - TRUNK SIDE TRIM RH, NO LAMP	Unrestricted	TRUNK SIDE TRIM ASSEMBLY WITHOUT LAMP - RIGHT	1025976-00-C	1	
3	ASY - TRUNK SIDE TRIM RH, NO LAMP	Unrestricted	TRUNK SIDE TRIM ASSEMBLY WITHOUT LAMP - RIGHT	1045200-00-C	1	
3	ASY - TRUNK SIDE TRIM RH 3ROW	Unrestricted	TRUNK SIDE TRIM ASSEMBLY WITH 3RD ROW - RIGHT	1018356-00-E	1	
4	ASY - TRUNK SIDE TRIM RH SUBWFR, NO LAMP	Unrestricted	TRUNK SIDE TRIM ASSEMBLY WITH SUBWOOFER, WITHOUT LAMP - RIGHT	1025980-00-C	1	
4	ASY - TRUNK SIDE TRIM RH SUBWFR, 3ROW	Unrestricted	TRUNK SIDE TRIM ASSEMBLY WITH SUBWOOFER - RIGHT	1018357-00-E	1	
4	ASY - TRUNK SIDE TRIM RH SUBWFR, 3ROW	Unrestricted	TRUNK SIDE TRIM ASSEMBLY WITH SUBWOOFER - RIGHT	1045202-00-C	1	
5	TRUNK FLOOR TRIM - BASE	Unrestricted	TRUNK FLOOR TRIM - BASE	1002413-00-G	1	
5	TRUNK FLOOR TRIM - BASE	Unrestricted	TRUNK FLOOR TRIM - BASE	1045195-00-A	1	
5	TRUNK FLOOR TRIM - SUBWFR	Unrestricted	TRUNK FLOOR TRIM WITH SUBWOOFER	1012352-00-G	1	
5	TRUNK FLOOR TRIM - BASE - 3ROW	Unrestricted	TRUNK FLOOR TRIM WITH 3RD ROW	1018358-00-G	1	
5	TRUNK FLOOR TRIM - SUBWFR - 3ROW	Unrestricted	TRUNK FLOOR TRIM WITH SUBWOOFER AND 3RD ROW	1018359-00-G	1	

6	BRKT, TRUNK LH	Unrestricted	TRUNK BRACKET LEFT	1009173-00-E	1	
7	BRKT - TRUNK. RH	Unrestricted	TRUNK BRACKET RIGHT	1009174-00-E	1	
8	COVER,STRUT, TRUNK TRIM LH	Unrestricted	STRUT COVER TRUNK TRIM - LEFT	1012354-00-F	1	
8	COVER,STRUT, TRUNK TRIM LH	Unrestricted	STRUT COVER TRUNK TRIM - LEFT	1045204-00-A	1	
9	COVER, STRUT, TRUNK TRIM RH - BASE	Unrestricted	STRUT COVER TRUNK TRIM - RIGHT	1012353-00-F	1	
9	COVER, STRUT, TRUNK TRIM RH - BASE	Unrestricted	STRUT COVER TRUNK TRIM - RIGHT	1045203-00-A	1	
9	COVER, STRUT, TRUNK TRIM RH - SUBWFR	Unrestricted	STRUT COVER TRUNK TRIM WITH SUBWOOFER - RIGHT	1018384-00-G	1	
9	COVER, STRUT, TRUNK TRIM RH - SUBWFR	Unrestricted	STRUT COVER TRUNK TRIM WITH SUBWOOFER - RIGHT	1045205-00-A	1	
10	TRUNK TRIM REAR FOOTWELL - BASE	Unrestricted	REAR FOOTWELL TRUNK TRIM	1002415-00-G	1	
10	TRUNK TRIM REAR FOOTWELL - BASE	Unrestricted	REAR FOOTWELL TRUNK TRIM	1045210-00-A	1	
10	TRUNK TRIM REAR FOOTWELL - SUBWFR	Unrestricted	REAR FOOTWELL TRUNK TRIM WITH SUBWOOFER	1002412-00-G	1	
10	TRUNK TRIM REAR FOOTWELL 3ROW	Unrestricted	REAR FOOTWELL TRUNK TRIM WITH 3RD ROW	1018761-00-F	1	
10	TRUNK TRIM REAR FOOTWELL W/ SBWFR, 3ROW	Unrestricted	REAR FOOTWELL TRUNK TRIM WITH SUBWOOFER AND 3RD ROW	1018762-00-F	1	
11	BRKT, TRUNK, REAR	Unrestricted	REAR TRUNK BRACKET	1009175-00-D	1	
12	TRUNK TRIM - REAR WALL	Unrestricted	REAR WALL TRUNK TRIM	6007436-00-G	1	
12	TRUNK TRIM - REAR WALL	Unrestricted	REAR WALL TRUNK TRIM	1045215-00-A	1	
*	LAMP, PUDDLE	Unrestricted	PUDDLE LAMP	1007151-00-D	2	For items #2 and #3.
*	CLIP, BRUSH, 7MM, 3.75-12.5, D20	Unrestricted	CLIP, BRUSH, 7MM DIAMETER HOLES, 20MM DIAMTER HEAD	1010026-00-A	2	
*	RATCHETING ACTION RIVET - BLACK	Unrestricted	PLASTIC RATCHETING RIVET - BLACK	1018830-01-A	22	
*	SCR ST WSHR M6x20 ZnAl	Unrestricted	SCREW WASHER M6x20 ZINC ALUMINUM	1006539-00-A	4	Use to install item #11
*	GROMMET 11F 5	Unrestricted	GROMMET FOR M6 THREADS	1006642-00-A	4	Use to install item #11. Order in quantities of 50; minimum order: 50.
*	BRUSH CLIP 5MM - 22.20MM	Unrestricted	BRUSH CLIP 5MM - 22.20MM	1009399-00-A	8	Order in quantities of 50; minimum order: 50.

CENTER CONSOLE

Center Tunnel Trim

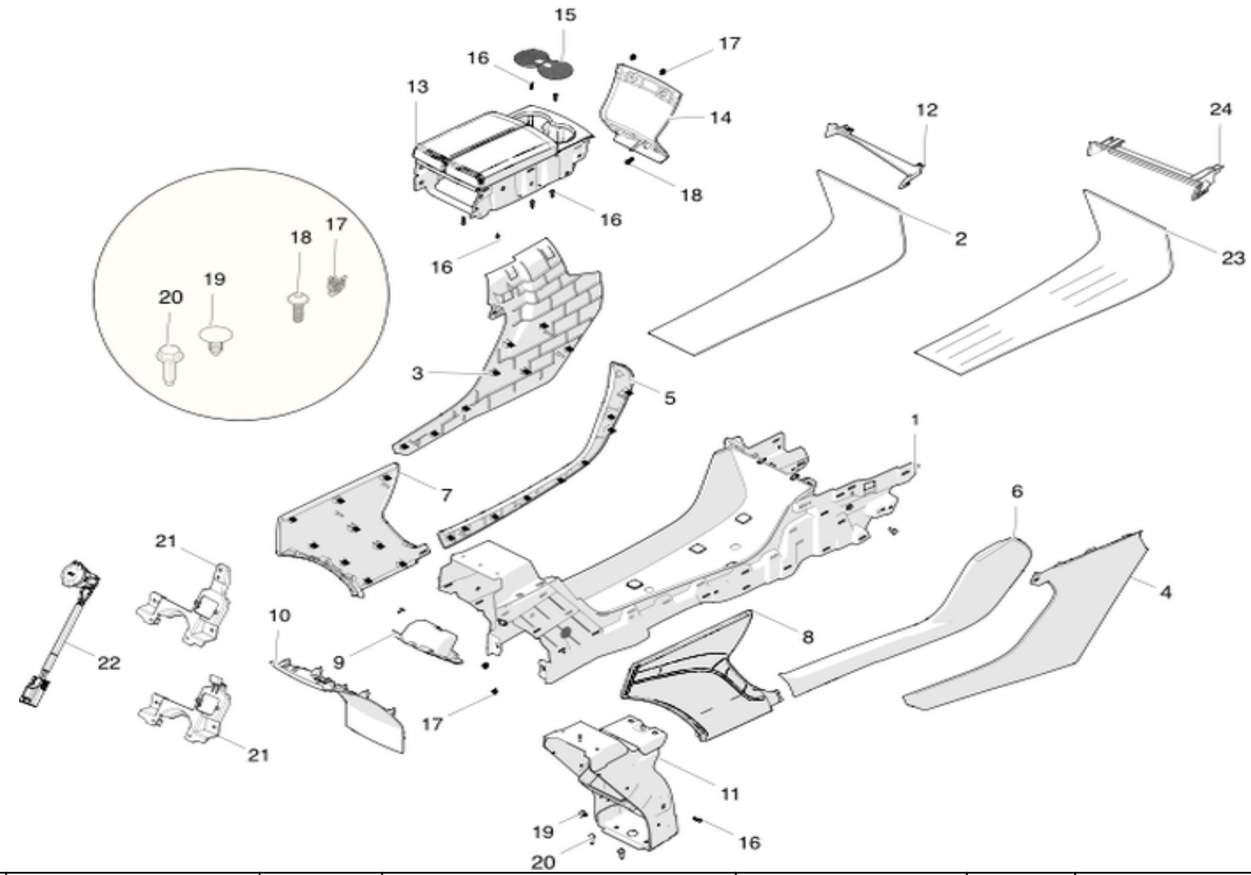

No	Part Name	Category	Part Description	Part Number	Qty	Comments
1	PLASTICS SUB ASY - CC CARRIER	Unrestricted	CENTER CONSOLE CARRIER - WITH CABIN TEMP SENSOR - LEFT HAND DRIVE AND RIGHT HAND DRIVE	1026728-S0-E	1	For vehicles manufactured on or after January 1st, 2014. With Cabin Temperature Sensor in Center Console. For use with cars that have the cabin temperature sensor mounted underneath the USB ports.
1	PLASTICS SUB ASY - CC CARRIER	Unrestricted	CENTER CONSOLE CARRIER - WITHOUT CABIN TEMP SENSOR - LEFT HAND DRIVE	1010759-00-A	1	Without Cabin Temperature Sensor in Center Console. For use with cars that have the cabin temperature sensor mounted at the steering column.
1	PLASTICS SUB ASY - CC CARRIER	Unrestricted	CENTER CONSOLE CARRIER - WITH CABIN TEMP SENSOR - LEFT HAND DRIVE	1010759-00-B	1	With Cabin Temperature Sensor in Center Console. For use with cars that have the cabin temperature sensor mounted underneath the USB ports.
2	MAT, CENTER CONSOLE	Unrestricted	CENTER CONSOLE MAT	1002390-00-G	1	OK to use F
3	ASY, CLOSEOUT, FR, LH, CNTR CONSOLE	Unrestricted	CENTER CONSOLE CLOSEOUT - FRONT LEFT	1008247-00-I	1	OK to use E. H and newer has carpet.
4	ASY, CLOSEOUT, FR, RH, CNTR CONSOLE	Unrestricted	CENTER CONSOLE CLOSEOUT - FRONT RIGHT	1008244-98-I	1	
5	ASY, PANEL, WRAPPED LH	Unrestricted	CENTER CONSOLE PANEL ASSEMBLY - LEFT FRONT - WRAPPED - BLACK STITCHING	1005365-00-C	1	Black stitching
5	ASY, PANEL, WRAPPED PVC, LH	Unrestricted	CENTER CONSOLE PANEL ASSEMBLY - LEFT FRONT - PVC WRAPPED - GRAY STITCHING	1005365-01-C	1	Gray stitching
6	ASY PANEL WRAPPED RH	Unrestricted	CENTER CONSOLE PANEL ASSEMBLY - RIGHT FRONT - WRAPPED - BLACK STITCHING	1004705-00-D	1	Black stitching
6	ASY, PANEL, WRAPPED PVC, RH	Unrestricted	CENTER CONSOLE PANEL ASSEMBLY - RIGHT FRONT - PVC WRAPPED - GRAY STITCHING	1004705-01-E	1	Gray stitching. OK to use -D or newer.

7	ASY, PANEL, WRAPPED, LH, RR	Unrestricted	CENTER CONSOLE PANEL ASSEMBLY - LEFT REAR - WRAPPED - BLACK STITCHING	1008224-00-F	1	Black stitching. OK to use E or newer.
7	ASY, PANEL, WRAPPED PVC, LH, RR	Unrestricted	CENTER CONSOLE PANEL ASSEMBLY - LEFT REAR - PVC WRAPPED - GRAY STITCHING	1008224-01-F	1	Gray stitching. OK to use E or newer
8	ASY, PANEL, WRAPPED, RH, RR	Unrestricted	CENTER CONSOLE PANEL ASSEMBLY - RIGHT REAR - WRAPPED - BLACK STITCHING	1008227-00-F	1	Black stitching. OK to use E or newer.
8	ASY, PANEL, WRAPPED PVC, RH, RR	Unrestricted	CENTER CONSOLE PANEL ASSEMBLY - RIGHT REAR - PVC WRAPPED - GRAY STITCHING	1008227-01-F	1	Gray stitching. OK to use E or newer.
9	MEDIA HUB, USB PORTS	Unrestricted	USB MEDIA HUB PORTS	1004815-01-B	1	
10	PANEL, CENTER CONSOLE, REAR	Unrestricted	CENTER CONSOLE PANEL ASSEMBLY - REAR	1012718-00-F	1	OK to use C or newer
11	ASY, MTG BRACKET, CENTER CONSOLE REAR	Unrestricted	CENTER CONSOLE MOUNTING BRACKET ASSEMBLY - REAR	6007484-00-C	1	
12	ASY, MLDG, FR CONSOLE	Unrestricted	CENTER CONSOLE MOULDING ASSEMBLY - FRONT	1009246-00-D	1	
13	ASY, BASE ARMREST	Unrestricted	ARMREST ASSEMBLY	1002366-00-E	1	
*	ASY, ARMREST PAD, SET LTHR BLACK	Unrestricted	ARMREST PAD SET - LEATHER BLACK	1046444-01-D	1	Track (1005374-00-D) and track hardware (1052534-00-A) not included. Double decorative stitching. OK to use -B.
*	ASY ARMREST PAD SET PUR BLACK	Unrestricted	ASY ARMREST PAD SET PUR BLACK	1046444-21-D	1	For vehicles built on or after August 18, 2017 with option codes: LT5P
*	ASY, ARMREST PAD, SET LTHR TAN	Unrestricted	ARMREST PAD SET - LEATHER TAN	1024238-02-B	1	OK to use A or newer
*	ASY, ARMREST PAD, SET LTHR TAN	Unrestricted	ARMREST PAD SET - LEATHER TAN	1046444-02-D	1	Track (1005374-00-D) and track hardware (1052534-00-A) not included. Double decorative stitching. OK to use -B.
*	ASY ARMREST PAD SET PUR CREAM	Unrestricted	ASY ARMREST PAD SET PUR CREAM	1046444-22-D	1	For vehicles built on or after August 18, 2017 with option codes: LT5C
*	ASY, ARMREST PAD, SET LTHR WHITE	Unrestricted	ARMREST PAD SET - LEATHER WHITE	1024238-03-B	1	OK to use A or newer
*	ASY, ARMREST PAD, SET LTHR GREY	Unrestricted	ARMREST PAD SET - LEATHER GREY	1024238-04-B	1	OK to use A or newer
*	ASY, ARMREST PAD, SET LTHR GREY	Unrestricted	ARMREST PAD SET - LEATHER GREY	1046444-04-D	1	Track (1005374-00-D) and track hardware (1052534-00-A) not included. Double decorative stitching. OK to use -B.
*	ASY, ARMREST PAD, SET, PVC BLACK	Unrestricted	ARMREST PAD SET - PVC BLACK	1024238-08-B	1	OK to use A or newer
*	ASY, ARMREST PAD, SET, PVC BLACK	Unrestricted	ARMREST PAD SET - PVC BLACK	1046444-08-B	1	Track (1005374-00-D) and track hardware (1052534-00-A) not included.
*	ASY, ARMREST PAD, SET, PVC GREY	Unrestricted	ARMREST PAD SET - PVC GRAY	1024238-09-B	1	OK to use A or newer
*	ASY, ARMREST PAD, SET, PVC GREY	Unrestricted	ARMREST PAD SET - PVC GREY	1046444-09-C	1	Track (1005374-00-D) and track hardware (1052534-00-A) not included. Double decorative stitching. OK to use -B.
*	ASY, ARMREST PAD, SET, PVC TAN	Unrestricted	ARMREST PAD SET - PVC TAN	1024238-10-B	1	OK to use A or newer
*	ASY, ARMREST PAD, SET, PVC TAN	Unrestricted	ARMREST PAD SET - PVC TAN	1046444-10-C	1	Track (1005374-00-D) and track hardware (1052534-00-A) not included. Double decorative stitching. OK to use -B.
*	TRIM DECOR, CONSOLE, LACEWOOD	Unrestricted	CENTER CONSOLE ARMREST DECOR - LACEWOOD	1024237-01-B	1	OK to use A; A is bright chrome; B is satin chrome.
*	TRIM DECOR, CONSOLE, PIANO BLACK	Unrestricted	CENTER CONSOLE ARMREST DECOR - PIANO BLACK	1024237-02-B	1	For vehicles built before March 8, 2016 with option code IDPB. OK to use A; A is bright chrome; B is satin chrome.
*	TRIM DECOR, CONSOLE, PIANO BLACK	Unrestricted	CENTER CONSOLE ARMREST DECOR - PIANO BLACK	1065900-93-C	1	For vehicles built on or after March 8, 2016 with option code: IDPB.
*	TRIM DECOR, CONSOLE, CARBON FIBER	Unrestricted	CENTER CONSOLE ARMREST DECOR - CARBON FIBER	1024237-03-C	1	For vehicles with option code: IDCF.
*	TRIM DECOR, CONSOLE, OBECHE MATTE	Unrestricted	CENTER CONSOLE ARMREST DECOR - OBECHE OPEN PORE	1024237-04-C	1	For vehicles with option codes IDHM OR IDOM.
*	TRIM DECOR, CONSOLE, OBECHE GLOSS	Unrestricted	CENTER CONSOLE ARMREST DECOR - OBECHE GLOSS	1065900-08-C	1	For vehicles built on or after Feb. 23, 2016 with option codes: IDHG or IDOG.
*	TRIM DECOR, CONSOLE, FIGURED ASH	Unrestricted	CENTER CONSOLE ARMREST DECOR - FIGURED ASH	1065900-09-C	1	For vehicles with option codes: IDBO AND DRLH.
*	TRIM DECOR, CONSOLE, DARK ASH	Unrestricted	CENTER CONSOLE ARMREST DECOR - DARK ASH	1065900-10-C	1	For vehicles with option codes: IDBA AND DRLH.
*	TRACK ARMREST	Unrestricted	ARMREST TRACK	1005374-00-D	2	
*	BOLT PN M5x6 PC88	Unrestricted	BOLT M5x6	1052534-00-A	4	Use with armrest pad track
*	CLIP, U-BELL, 5.8 X 1.5-3.5	Unrestricted	U-BELL CLIP, 5.8 X 1.5-3.5	1008245-00-A	8	
*	NUT,HEX-FLNG,M5X.8,STL,ZNC,NYLOCK	Unrestricted	NUT, HEX FLANGE LOCK, M5X.8, STEEL, ZINC	1012845-00-A	4	Order in quantities of 50; minimum order: 50.
14	ASY, PNL, CLOSEOUT, FRONT	Unrestricted	CENTER CONSOLE FRONT CLOSEOUT PANEL ASSEMBLY - WITHOUT CABIN TEMP SENSOR	1008326-00-C	1	Use without Cabin Temperature Sensor
14	ASY, PNL, CLOSEOUT, FRONT	Unrestricted	CENTER CONSOLE FRONT CLOSEOUT PANEL ASSEMBLY - WITHOUT CABIN TEMP SENSOR	1008326-00-D	1	Use with Cabin Temperature Sensor
15	MAT, CUP HOLDER, COMMON	Unrestricted	CUP HOLDER MAT	1005376-00-B	1	

16	BLT,TPG,TRX,BTN,M4.2x1.4-19[St]-07	Unrestricted	BOLT, TORX, BUTTON HEAD, M4.2x1.4	1014049-00-B	8	
17	NUT PSH M4.2	Unrestricted	NUT, PUSH, M4.2 x 1.41	1007116-00-A	40	Order in quantities of 50; minimum order: 50.
18	SCR TRX WSHR M5x1.8-16 Zn	Unrestricted	SCREW TORX WASHER M5x1.8-16 ZINC	1009335-00-A	2	
19	PUSH PIN 5.8x17 D17.8	Unrestricted	PUSH PIN 5.8x17 D17.8	1009115-00-A	4	
20	BLT HEX WSHR M6-1.00x25 ZnAl	Unrestricted	BOLT HEX WASHER M6-1.00x25 ZINC ALUMINUM	1006551-00-B	2	OK to use A.
21	ADAPTER, PASSIVE, ENTRY SYSTEM	Unrestricted	PASSIVE ENTRY SYSTEM ADAPTER WITHOUT CABIN TEMP SENSOR	1009245-00-D	1	Use with Cabin Temperature Sensor
22	RT ANGLED POWER OUTLET 12V	Unrestricted	RIGHT ANGLED POWER OUTLET 12V	1011678-00-A	1	
23	CC FLOOR FINISHER, LACEWOOD	Unrestricted	CENTER CONSOLE FLOOR FINISHER (YACHT FLOOR) - LACEWOOD	1023170-01-C	1	Yacht Floor. B has rubber trim. C does not have rubber trim.
23	CC FLOOR FINISHER, PIANO BLACK	Unrestricted	CENTER CONSOLE FLOOR FINISHER (YACHT FLOOR) - PIANO BLACK	1023170-02-C	1	Yacht Floor. B has rubber trim. C does not have rubber trim.
23	CC FLOOR FINISHER, CARBON FIBER	Unrestricted	CENTER CONSOLE FLOOR FINISHER (YACHT FLOOR) - CARBON FIBER	1023170-03-C	1	Yacht Floor. B has rubber trim. C does not have rubber trim.
23	CC FLOOR FINISHER, OBECHE MATTE	Unrestricted	CENTER CONSOLE FLOOR FINISHER (YACHT FLOOR) - OBECHE OPEN PORE	1023170-04-C	1	Yacht Floor. B has rubber trim. C does not have rubber trim.
23	CC FLOOR FINISHER, OBECHE GLOSS	Unrestricted	CENTER CONSOLE FLOOR FINISHER (YACHT FLOOR) - OBECHE GLOSSY	1023170-05-C	1	Yacht Floor. B has rubber trim. C does not have rubber trim.
24	MLDG, FR CONSOLE, FLOOR FINISHER	Unrestricted	FRONT CONSOLE FLOOR FINISHER MOULDING	1023330-00-C	1	Use with item #23. Also order clips - 1008245-00-A. OK to use A or newer.
*	CLIP, U-BELL, 5.8 X 1.5-3.5	Unrestricted	U-BELL CLIP, 5.8 X 1.5-3.5	1008245-00-A	2	use to install item #24
*	DUAL LOCK, 25.0 x 20.0	Unrestricted	DUAL LOCK 25MM x 25MM	1006396-00-A	16	
*	WSHR CNCL SPRNG M6x14x1.5 ZnAl	Unrestricted	WASHER SPRING M6x14x1.5 ZINC ALUMINUM	1007042-00-A	2	
*	BLT,TPG,TRX,BTN,ST4.2x1.4-20[SS]-S-01	Unrestricted	BOLT, TORX, BUTTON HEAD, M4.2x1.4	1014049-00-B	14	
*	SCR, HEX, M6X16	Unrestricted	SCREW, HEX, M6X16	1014179-00-A	4	use to install item #1
*	PUSH PIN 5.8x17 D17.8	Unrestricted	PUSH PIN 5.8x17 D17.8	1009115-00-A	4	
*	SCR, HEX, M6X16	Unrestricted	SCREW, HEX, M6X16	1014179-00-A	4	use to install item #1
*	PUSH PIN 5.8x17 D17.8	Unrestricted	PUSH PIN 5.8x17 D17.8	1009115-00-A	4	
*	SCR,M3.0-1.12x10,Delta PT,TRX,ZnNi 1000	Unrestricted	SCREW, TORX, M3.0-1.12x10 ZINC NICKEL	1008307-00-A	1	
*	CLIP, U-BELL, 5.8 X 1.5-3.5	Unrestricted	U-BELL CLIP, 5.8 X 1.5-3.5	1008245-00-A	20	
*	NUT HEX M6-1.00 8 CONICAL FREE SPIN WSHR	Unrestricted	NUT, HEX, M6-1.00 CONICAL FREE SPIN WASHER	1009946-00-A	8	Order in quantities of 50; minimum order: 50.
*	CLIP, BOSS, 1.5 x 7.5, SNAPPING 0.7-1.5	Unrestricted	SNAPPING CLIP 1.5MM x 7.5MM, 0.7-1.5MM PANELS	1010951-00-A	4	
*	U NUT,M4.2x1.41, TINNERMAN D99389-M42141	Unrestricted	U NUT, M4.2MM X 1.41MM	1013655-00-A	2	
*	5056 Al Body/Steel Mandrel pop rivet	Unrestricted	POP RIVET 5/32INCH DIAMETER X 1/8INCH GRIP	1011742-00-A	8	
*	SCR PT TRX WSHR M4x1.46-12 ZnBlue	Unrestricted	SCREW TORX WASHER M4x1.46	1009344-00-A	8	
*	SCR ,M5X16,TRX,10.9,ZnNi,PT,Rpoint	Unrestricted	SCREW, TORX, M5X16, ZINC NICKEL	1012629-00-B	4	use to install item #1 and 14
*	SUBASY, RR CONSOLE, EXEC, LTHR BLK	Unrestricted	REAR CONSOLE SUBASSEMBLY- EXECUTIVE LEATHER BLACK	1035650-01-B	1	use for Executive Seat
*	SUBASY, RR CONSOLE, EXEC, LTHR TAN	Unrestricted	REAR CONSOLE SUBASSEMBLY - EXECUTIVE LEATHER TAN	1035650-02-B	1	use for Executive Seat
*	SUBASY, RR CONSOLE, EXEC, LTHR GREY	Unrestricted	REAR CONSOLE SUBASSEMBLY - EXECUTIVE LEATHER GRAY	1035650-04-B	1	use for Executive Seat
*	SUBASY, LID LOWER	Unrestricted	REAR CONSOLE - LOWER LID AND HINGE SUBASSEMBLY	1043280-00-B	1	for rear console lid and hinge repairs
*	RUBBER MAT, MAIN BIN	Unrestricted	RUBBER MAT - MAIN BIN	1035665-00-B	1	for Executive Seat center console
*	RUBBER MAT, CUP HOLDER	Unrestricted	RUBBER MAT - CUP HOLDER	1035666-00-B	1	for Executive Seat center console
*	BOLT PF M5x25 PC88	Unrestricted	BOLT M5X25	1046226-00-A	6	for Executive Seat center console
*	DUST BAG, 2ND ROW CONSOLE	Unrestricted	DUST BAG - 2ND ROW CONSOLE	1049554-00-A	1	use to store 2nd row console
*	ASY, DECOR, LACEWOOD	Unrestricted	REAR CONSOLE DECOR - LACEWOOD	1031546-01-A	1	use for Executive Seat
*	ASY, DECOR, PIANO BLACK	Unrestricted	REAR CONSOLE DECOR - PIANO BLACK	1031546-02-A	1	use for Executive Seat
*	ASY, DECOR, CARBON FIBER	Unrestricted	REAR CONSOLE DECOR - CARBON FIBER	1031546-03-A	1	use for Executive Seat

*	ASY, DECOR, OBECHE MATTE	Unrestricted	REAR CONSOLE DECOR - OBECHE OPEN PORE	1031546-04-A	1	use for Executive Seat
*	ASY, DECOR, OBECHE GLOSS	Unrestricted	REAR CONSOLE DECOR - OBECHE GLOSSY	1031546-05-A	1	use for Executive Seat
*	CUSHION CLOSE PANEL	Unrestricted	REAR CONSOLE CUSHION CLOSE PANEL	1041018-00-A	1	use for Executive Seat

Premium Console Insert

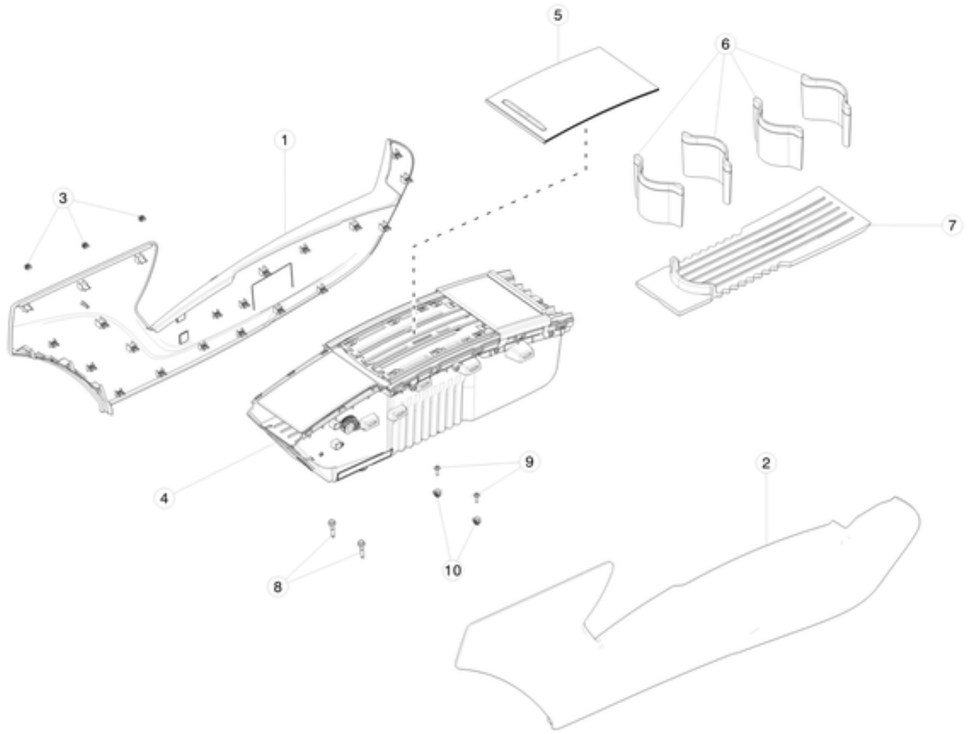

No	Part Name	Category	Part Description	Part Number	Qty	Comments
1	ASY, PANEL, PREM, LH, PVC B, BLK/BLK	Unrestricted	ASY, PANEL, PREM, LH, PVC B, BLK/BLK	1055163-02-C	1	Use on all vehicles EXCEPT those with option codes LT1C, LT5C
1	ASY, PANEL, PREM, LH, PVC B, CREAM	Unrestricted	ASY, PANEL, PREM, LH, PVC B, CREAM	1055163-05-C	1	For vehicles with option codes LT1C, LT5C
2	ASY, PANEL, PREM, RH, PVC B, BLK/BLK	Unrestricted	ASY, PANEL, PREM, RH, PVC B, BLK/BLK	1055164-02-C	1	Use on all vehicles EXCEPT those with option codes LT1C, LT5C
2	ASY, PANEL, PREM, RH, PVC B, BLK/BLK	Unrestricted	ASY, PANEL, PREM, RH, PVC B, BLK/BLK	1055164-05-C	1	For vehicles with option codes LT1C, LT5C
3	CLIP, U-BELL, 5.8 X 1.5-3.5	Unrestricted	CLIP, U-BELL, 5.8 X 1.5-3.5	1008245-00-A	43	
4	PREMIUM CONSOLE SUBASY	Unrestricted	PREMIUM CONSOLE SUBASY	1055149-00-E	1	
5	SLIDING LID, MAMMOTH	Unrestricted	SLIDING LID, MAMMOTH	1058088-06-A	1	For vehicles built before May 5, 2017.
5	SLIDING LID, FIG ASH BURL	Unrestricted	SLIDING LID, FIG ASH BURL	1058088-09-B	1	For vehicles built on or after May 5, 2017 with option code IDBO.
5	SLIDING LID, CARBON FIBER	Unrestricted	SLIDING LID, CARBON FIBER	1058088-11-A	1	For vehicles built on or after May 5, 2017 with option code IDCF.
5	SLIDING LID, LINEAR DARK ASH	Unrestricted	SLIDING LID, LINEAR DARK ASH	1058088-12-A	1	For vehicles built on or after May 5, 2017 with option code IDBA.
6	DIVIDER, PREMIUM CONSOLE	Unrestricted	DIVIDER, PREMIUM CONSOLE	1058082-00-B	4	
7	MAT, FRONT, PREMIUM CONSOLE	Unrestricted	MAT, FRONT, PREMIUM CONSOLE	1058083-00-B	1	
8	BLT HF M6x1.00x30 [10.9] DP ZnAl-W	Unrestricted	BLT HF M6x1.00x30 [10.9] DP ZnAl-W	1004354-00-A	2	
9	BLT,TPG,TRX,PFLG,M4.2x19x11.5[St]-01	Unrestricted	BLT,TPG,TRX,PFLG,M4.2x19x11.5[St]-01	1014049-00-B	2	
10	NUT PSH M4.2	Unrestricted	NUT PSH M4.2	1007116-00-A	2	
*	PHONE DOCK KIT, COMPLETE	Unrestricted	PHONE DOCK KIT, COMPLETE	1067700-00-B	1	

*	MEDIA CABLE APPLE LIGHTNING, PREMIUM CONSOLE	Unrestricted	MEDIA CABLE APPLE LIGHTNING, PREMIUM CONSOLE	1058085-00-A	1	
*	MEDIA CABLE MICRO USB, PREMIUM CONSOLE	Unrestricted	MEDIA CABLE MICRO USB, PREMIUM CONSOLE	1058086-00-A	1	

DOOR TRIM

Front Door Trim Pad

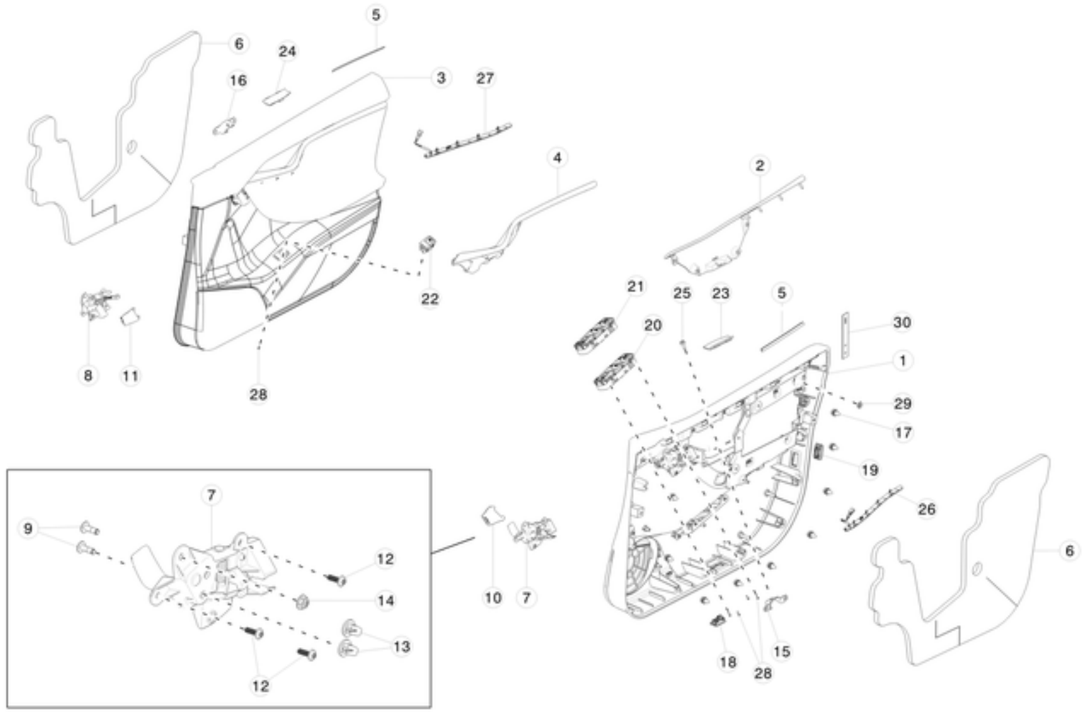

No	Part Name	Category	Part Description	Part Number	Qty	Comments
1	DR FR LH PURB/PVCB/PVCB BLK	Unrestricted	DOOR PANEL - LEFT FRONT - PURB/PVCB/PVCB BLACK	6006071-22-M	1	For vehicles with option codes: LT1B AND DRLH, LT00 AND DRLH AND CW00, LT00 AND DRLH AND CW02.
1	DR FR LH PURB/PVCB/PVCB TAN	Unrestricted	DOOR PANEL - LEFT FRONT - PURB/PVCB/PVCB TAN	6006071-23-M	1	For vehicles with option codes: LT1T AND DRLH.
1	DR FR LH PURB/PVCB/PVCB GREY	Unrestricted	DOOR PANEL - LEFT FRONT - PURB/PVCB/PVCB GREY	6006071-24-M	1	For vehicles with option codes: LT1G AND DRLH.
1	DOOR TRIM DR FR LH LTHRA/LTHRA/PVCB BLK	Unrestricted	DOOR PANEL - LEFT FRONT - LTHRA / PVCB BLACK	6006071-25-M	1	For vehicles with option codes: LT2B AND DRLH, LT3B AND DRLH.
1	DR FR LH PURB/S/PUR13/PVCB BLK PREM LHD	Unrestricted	DR FR LH PURB/S/PUR13/PVCB BLK PREM LHD	6006071-49-N	1	For vehicles built on or after August 18, 2017 with option codes: LT5P AND DRLH
1	DOOR TRIM DR FR LH LTHRA/LTHRA/PVCB TAN	Unrestricted	DOOR PANEL - LEFT FRONT - LTHRA / PVCB TAN	6006071-26-M	1	For vehicles with option codes: LT2T AND DRLH, LT3T AND DRLH.
1	DR FR LH PURB/S/PUR13/PVCB CREAM PRM LHD	Unrestricted	DR FR LH PURB/S/PUR13/PVCB CREAM PRM LHD	6006071-50-N	1	For vehicles built on or after August 18, 2017 with option codes: LT5C AND DRLH
1	DOOR TRIM DR FR LH LTHRA/LTHRA/PVCB GREY	Unrestricted	DOOR PANEL - LEFT FRONT - LTHRA / PVCB GREY	6006071-27-M	1	For vehicles with option codes: LT2G AND DRLH, LT3G AND DRLH.
1	DR FR LH NAPPA A LTHR WHITE	Unrestricted	DR FR LH NAPPA A LTHR WHITE	6006071-14-M	1	
*	DOOR BELTLINES LEATHER KIT	Unrestricted	DOOR BELTLINES LEATHER KIT	1103858-01-A	1	Refer to table at the end of this section for door trim compatibility
*	DOOR BELTLINES PUR NAPPA B KIT	Unrestricted	DOOR BELTLINES PUR NAPPA B KIT	1103858-02-A	1	Refer to table at the end of this section for door trim compatibility
*	ASY CARRIER BELTLINE FR LH LTHRA	Unrestricted	ASY CARRIER BELTLINE FRONT LEFT LEATHER	1009305-01-E	1	
*	ASY CARRIER BELTLINE LH FR PURB	Unrestricted	ASY CARRIER BELTLINE LEFT FRONT PURB	1009305-02-E	1	Refer to table at the end of this section for door trim compatibility
*	ASY DR BELTLINE LH FR PURB	Unrestricted	ASY DR BELTLINE LEFT FRONT PURB	1009307-02-E	1	Refer to table at the end of this section for door trim compatibility

*	ASY PAD LH FR DOOR TRIM LTHRA BLACK	Unrestricted	ASY PAD ARMREST BOLSTER LEFT FRONT DOOR TRIM LEATHER BLACK	1002960-01-J	1	
*	ASY PAD LH FR DOOR TRIM LTHRA TAN	Unrestricted	ASY PAD ARMREST BOLSTER LEFT FRONT DOOR TRIM LEATHER TAN	1002960-02-J	1	Refer to table at the end of this section for door trim compatibility
*	ASY PAD LH FRONT DOOR TRIM LTHRA TAN	Unrestricted	ASY PAD ARMREST BOLSTER LEFT FRONT DOOR TRIM LEATHER GREY	1002960-03-J	1	Refer to table at the end of this section for door trim compatibility
*	ASY PAD LH FR DOOR TRIM LTHRA WHT	Unrestricted	ASY PAD ARMREST BOLSTER LEFT FRONT DOOR TRIM LEATHER WHITE	1002960-04-J	1	Refer to table at the end of this section for door trim compatibility
*	ASY PAD LH FRONT DOOR TRIM PVCB BLACK	Unrestricted	ASY PAD ARMREST BOLSTER LEFT FRONT DOOR TRIM PVCB BLACK	1002960-07-J	1	Refer to table at the end of this section for door trim compatibility
*	ASY PAD LH FRONT DOOR TRIM PVCB TAN	Unrestricted	ASY PAD ARMREST BOLSTER LEFT FRONT DOOR TRIM PVCB TAN	1002960-08-J	1	Refer to table at the end of this section for door trim compatibility
*	ASY PAD LH FRONT DOOR TRIM PVCB GREY	Unrestricted	ASY PAD ARMREST BOLSTER LEFT FRONT DOOR TRIM PVCB GREY	1002960-09-J	1	Refer to table at the end of this section for door trim compatibility
*	ASY PAD LH FRONT DOOR TRIM ULTF WHITE	Unrestricted	ASY PAD ARMREST BOLSTER LEFT FRONT DOOR TRIM ULTRA WHITE	1002960-11-J	1	Refer to table at the end of this section for door trim compatibility
2	ASY, DCOR DOOR TRIM PULL CUP LH FR	Unrestricted	DOOR TRIM DECOR ASSEMBLY WILL PULL CUP INNER TRIM - LEFT FRONT	1051387-00-A	1	chrome trim on door panel
3	DOOR TRIM DR FR RH PURB/PVCB/PVCB BLACK	Unrestricted	DOOR PANEL - RIGHT FRONT - PURB/PVCB/PVCB BLACK	1007936-22-M	1	For non-leather, including Vegan vehicles.
3	DOOR TRIM DR FR RH PURB/PVCB/PVCB TAN	Unrestricted	DOOR PANEL - RIGHT FRONT - PURB/PVCB/PVCB TAN	1007936-23-M	1	For non-premium interior.
3	DOOR TRIM DR FR RH PURB/PVCB/PVCB GREY	Unrestricted	DOOR PANEL - RIGHT FRONT - PURB/PVCB/PVCB GREY	1007936-24-M	1	For non-premium interior.
3	DOOR TRIM DR FR RH LTHRA/LTHRA/PVCB BLACK	Unrestricted	DOOR PANEL - RIGHT FRONT - LEATHER-A/LEATHER-A/PVCB BLACK	1007936-25-M	1	For Premium interior package.
3	DR FR RH PURB/S/PUR13/PVCB BLACK PRM LHD	Unrestricted	DR FR RH PURB/S/PUR13/PVCB BLACK PRM LHD	1007936-49-N	1	For vehicles built on or after August 18, 2017 with option codes: LT5P AND DRLH
3	DOOR TRIM DR FR RH LTHRA/LTHRA/PVCB TAN	Unrestricted	DOOR PANEL - RIGHT FRONT - LEATHER-A/LEATHER-A/PVCB TAN	1007936-26-M	1	For Premium interior package.
3	DR FR RH PURB/S/PUR13/PVCB CREAM PRM LHD	Unrestricted	DR FR RH PURB/S/PUR13/PVCB CREAM PRM LHD	1007936-50-N	1	For vehicles built on or after August 18, 2017 with option codes: LT5C AND DRLH
3	DOOR TRIM DR FR RH LTHRA/LTHRA/PVCB GREY	Unrestricted	DOOR PANEL - RIGHT FRONT - LEATHER-A/LEATHER-A/PVCB GREY	1007936-27-M	1	For Premium interior package.
*	DOOR BELTLINES LEATHER KIT	Unrestricted	DOOR BELTLINES LEATHER KIT	1103858-01-A	1	Refer to table at the end of this section for door trim compatibility
*	DOOR BELTLINES PUR NAPPA B KIT	Unrestricted	DOOR BELTLINES PUR NAPPA B KIT	1103858-02-A	1	Refer to table at the end of this section for door trim compatibility
*	ASY DR BELTLINE RH FR LTHRA	Unrestricted	ASY DR BELTLINE RIGHT FRONT LTHRA	1009307-01-E	1	Refer to table at the end of this section for door trim compatibility
*	ASY PAD RH FR DOOR TRIM LTHRA BLACK	Unrestricted	ASY PAD ARMREST BOLSTER RIGHT FRONT DOOR TRIM LEATHER BLACK	1007938-01-J	1	Refer to table at the end of this section for door trim compatibility
*	ASY PAD RH FR DOOR TRIM LTHRA TAN	Unrestricted	ASY PAD ARMREST BOLSTER RIGHT FRONT DOOR TRIM LEATHER TAN	1007938-02-J	1	Refer to table at the end of this section for door trim compatibility
*	ASY PAD RH FRONT DOOR TRIM LTHRA TAN	Unrestricted	ASY PAD ARMREST BOLSTER RIGHT FRONT DOOR TRIM LEATHER GREY	1007938-03-J	1	Refer to table at the end of this section for door trim compatibility
*	ASY PAD RH FR DOOR TRIM LTHRA WHT	Unrestricted	ASY PAD ARMREST BOLSTER RIGHT FRONT DOOR TRIM LEATHER WHITE	1007938-04-J	1	Refer to table at the end of this section for door trim compatibility
*	ASY PAD RH FRONT DOOR TRIM PVCB BLACK	Unrestricted	ASY PAD ARMREST BOLSTER RIGHT FRONT DOOR TRIM PVCB BLACK	1007938-07-J	1	Refer to table at the end of this section for door trim compatibility
*	ASY PAD RH FRONT DOOR TRIM PVCB TAN	Unrestricted	ASY PAD ARMREST BOLSTER RIGHT FRONT DOOR TRIM PVCB TAN	1007938-08-J	1	Refer to table at the end of this section for door trim compatibility
*	ASY PAD RH FRONT DOOR TRIM PVCB GREY	Unrestricted	ASY PAD ARMREST BOLSTER RIGHT FRONT DOOR TRIM PVCB GREY	1007938-09-J	1	Refer to table at the end of this section for door trim compatibility
*	ASY PAD RH FRONT DOOR TRIM ULTF WHITE	Unrestricted	ASY PAD ARMREST BOLSTER RIGHT FRONT DOOR TRIM ULTRA WHITE	1007938-11-J	1	Refer to table at the end of this section for door trim compatibility
4	ASY, DCOR DOOR TRIM PULL CUP RH FR	Unrestricted	DOOR TRIM DECOR ASSEMBLY WILL PULL CUP INNER TRIM - RIGHT FRONT	1051388-00-A	1	chrome trim on door panel
5	FELT TAPE 210 x 8 x 1	Unrestricted	FELT TAPE 210MM X 8MM X 1MM	1029042-00-A	12	use on door trim to prevent squeak
6	INSULATOR - ACOUSTIC - FR	Unrestricted	ACOUSTIC INSULATOR - FRONT	1007912-00-D	2	
7	ASY, OPENER, DOOR, LH, FRONT	Unrestricted	DOOR OPENER ASSEMBLY - LEFT FRONT	1002973-00-F	1	
8	ASY, OPENER, DOOR, RH, FRONT	Unrestricted	DOOR OPENER ASSEMBLY - RIGHT FRONT	1007940-00-F	1	
9	BLT,BTN,TRX,M5x16[10.9]-BK-X-SP-05	Unrestricted	BOLT, BUTTON HEAD, TORX, M5x16	1015888-00-C	4	
10	INSERT, FR, LH, DOOR HANDLE	Unrestricted	DOOR HANDLE INSERT - LEFT FRONT	1002974-00-E	1	
11	INSERT, FR, RH, DOOR HANDLE	Unrestricted	DOOR HANDLE INSERT - RIGHT FRONT	1007942-00-E	1	
*	Screw	Unrestricted	SCREW M6x16 ZINC ALUMINUM	1008780-00-A	4	
12	M5-16 TRX WSHR	Unrestricted	SCREW TORX WASHER M5x1.8-16 ZINC	1009335-00-A	6	
13	GROMMET 11F 5	Unrestricted	GROMMET FOR M6 THREADS	1006642-00-A	4	Order in quantities of 50; minimum order: 50.
14	PALNUT TYPE-SD M5x10-15	Unrestricted	PALNUT M5x10	1009338-00-A	2	
15	ASY - BRKT - FR DOOR PULL CUP LH	Unrestricted	DOOR PULL CUP BRACKET ASSEMBLY - FRONT LEFT	1003540-00-A	1	
16	ASY - BRKT - FR DOOR PULL CUP RH	Unrestricted	DOOR PULL CUP BRACKET ASSEMBLY - FRONT RIGHT	1003541-00-A	1	

17	CLIP, HEART FLEX W WSHR 70 LBS RETENTION	Unrestricted	HEART FLEX CLIP WITH WASHER - 70 LBS RETENTION	1025401-00-A	18	Order in quantities of 50; minimum order: 50. All door panel clips must be replaced after removal.
18	LAMP, PUDDLE	Unrestricted	PUDDLE LAMP	1007151-00-D	2	
19	LAMP, REFLECTOR, RED	Unrestricted	RED REFLECTOR LAMP	1007152-00-D	2	
20	SWITCH, POWER WINDOW, DRIVER LH	Unrestricted	POWER WINDOW SWITCH - DRIVER SIDE	1003589-00-B	1	without folding mirrors switch
21	SWITCH, WINDOW, POWER FOLD, DRIVER LH	Unrestricted	POWER WINDOW SWITCH WITH POWER FOLD MIRROR - DRIVER SIDE	1028641-00-A	1	with folding mirrors switch
22	SWITCH, PWR WINDOW, PASSENGER	Unrestricted	POWER WINDOW SWITCH - PASSENGER SIDE	1003749-00-B	1	
23	INSERT, PULL CUP, LH DOOR TRIM	Unrestricted	DOOR TRIM PULL CUP INSERT - LEFT	1002966-00-B	1	rubber cover in pull cup
24	INSERT, PULL CUP, RH, DOOR TRIM	Unrestricted	DOOR TRIM PULL CUP INSERT - RIGHT	1007941-00-B	1	rubber cover in pull cup
25	BLT HF M6x1.00x18 [8.8]-D-ZnAl-W	Unrestricted	BOLT M6x1.00x18 ZINC ALUMINUM	1006529-00-A	2	use in pull cup to secure door panel to door.
26	INDIRECT LIGHTING, PAD, LH FRONT DOOR	Unrestricted	DOOR INDIRECT LIGHTING PAD - LEFT FRONT	1002977-00-F	1	ambient light on door panel
27	INDIRECT LIGHTING, PAD, RH FRONT DOOR	Unrestricted	DOOR INDIRECT LIGHTING PAD - RIGHT FRONT	1007955-00-F	1	ambient light on door panel
28	SCR PAN TRX M2.5x12 Zn	Unrestricted	SCREW PAN TORX M2.5x12 ZINC	1008887-00-A	5	use for Window Switch
29	PUSH NUT ID 7.9MM OD 23.8MM FOR PLASTIC	Unrestricted	PUSH NUT 7.9X23.8MM DIAMETER	1025670-00-A	2	use for per SB-14-15-002
30	DOOR TRIM RETENTION STRAP	Unrestricted	DOOR TRIM RETENTION STRAP	1055371-00-B	2	for Dual Motor front door panels. OK to use 1055371-00-A
*	BLIND RIVET 3/16x0.376-0.5 AL/AL AAPS	Unrestricted	BLIND RIVET 3/16 x 0.376 - 0.5 ALUMINIUM	1055452-00-A	2	for Dual Motor front door panels
*	CLIP-DOOR TRIM BELT LINE	Unrestricted	CLIP-DOOR TRIM BELT LINE	1005783-00-B	10	clip underneath seal to secure door trim panel

Rear Door Trim Pad

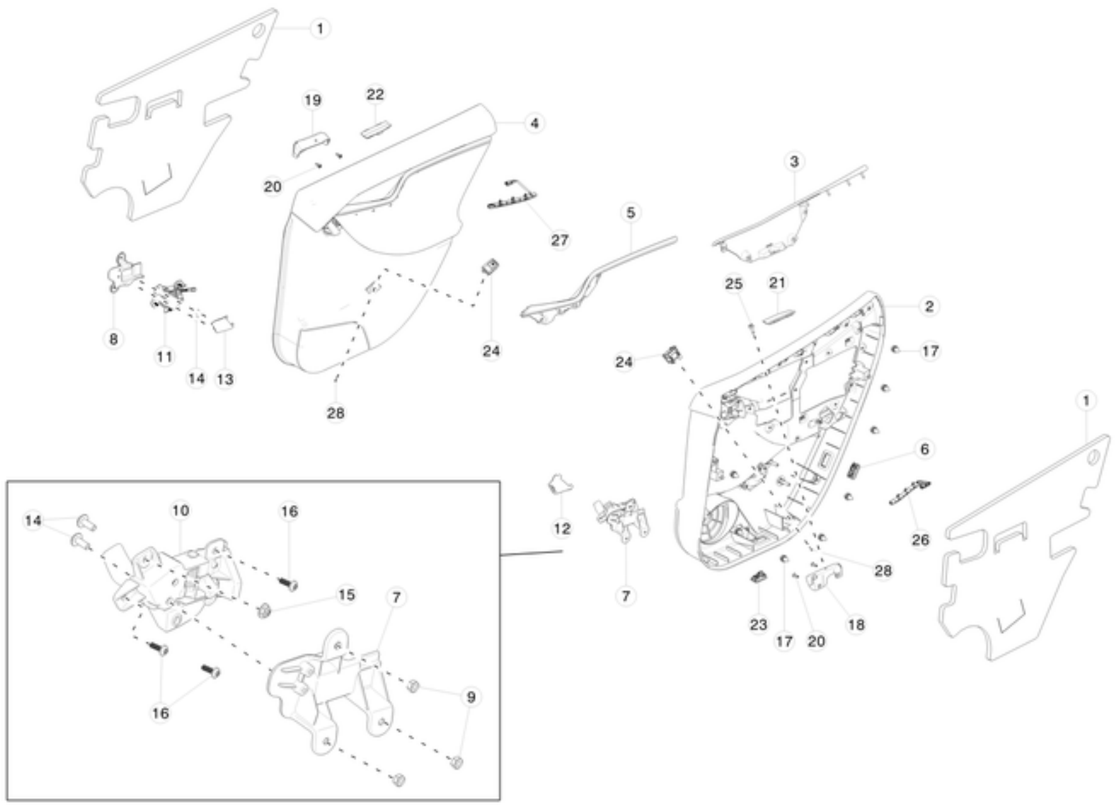

No	Part Name	Category	Part Description	Part Number	Qty	Comments
1	INSULATOR - ACOUSTIC - RR	Unrestricted	ACOUSTIC INSULATOR - REAR	1008133-00-D	2	
2	DR RR LH PURB/PVCB/PVCB BLACK	Unrestricted	DOOR PANEL - LEFT REAR - PURB/PVCB/PVCB BLACK	6006133-11-L	1	
2	DR RR LH PURB/PVCB/PVCB TAN	Unrestricted	DOOR PANEL - LEFT REAR - PURB/PVCB/PVCB TAN	6006133-12-L	1	
2	DR RR LH PURB/PVCB/PVCB GREY	Unrestricted	DOOR PANEL - LEFT REAR - PURB/PVCB/PVCB GREY	6006133-13-L	1	
2	DR RR LH LTHRA/LTHRA/PVCB BLACK	Unrestricted	DOOR PANEL - LEFT REAR - LTHRA/LTHRA/PVCB BLACK	6006133-14-L	1	
2	DR RR LH PURB/S/PUR13/PVCB BLACK PREM	Unrestricted	DR RR LH PURB/S/PUR13/PVCB BLACK PREM	6006133-49-L	1	For vehicles built on or after August 18, 2017 with option codes: LT5P
2	DR RR LH LTHRA/LTHRA/PVCB TAN	Unrestricted	DOOR PANEL - LEFT REAR - LTHRA/LTHRA/PVCB TAN	6006133-15-L	1	
2	DR RR LH PURB/S/PUR13/PVCB CREAM PREM	Unrestricted	DR RR LH PURB/S/PUR13/PVCB CREAM PREM	6006133-50-L	1	For vehicles built on or after August 18, 2017 with option codes: LT5C
2	DR RR LH LTHRA/LTHRA/PVCB GREY	Unrestricted	DOOR PANEL - LEFT REAR - LTHRA/LTHRA/PVCB GREY	6006133-16-L	1	
*	DOOR BELTLINES LEATHER KIT	Unrestricted	DOOR BELTLINES LEATHER KIT	1103858-01-A	1	Refer to table at the end of this section for door trim compatibility
*	DOOR BELTLINES PUR NAPPA B KIT	Unrestricted	DOOR BELTLINES PUR NAPPA B KIT	1103858-02-A	1	Refer to table at the end of this section for door trim compatibility
*	ASY CARRIER BELTLINE RR LH PURB	Unrestricted	ASY CARRIER BELTLINE REAR LEFT PURB	1009434-02-E	1	Refer to table at the end of this section for door trim compatibility
*	ASY PAD LH RR DOOR TRIM LTHRA BLACK	Unrestricted	ASY PAD ARMREST BOLSTER LEFT REAR DOOR TRIM LEATHER BLACK	6007497-01-J	1	Refer to table at the end of this section for door trim compatibility
*	ASY PAD LH RR DOOR TRIM LTHRA TAN	Unrestricted	ASY PAD ARMREST BOLSTER LEFT REAR DOOR TRIM LEATHER TAN	6007497-02-J	1	Refer to table at the end of this section for door trim compatibility
*	ASY PAD LH REAR DOOR TRIM LTHRA TAN	Unrestricted	ASY PAD ARMREST BOLSTER LEFT REAR DOOR TRIM LEATHER GREY	6007497-03-J	1	Refer to table at the end of this section for door trim compatibility

*	ASY PAD LH RR DOOR TRIM LTHRA WHT	Unrestricted	ASY PAD ARMREST BOLSTER LEFT REAR DOOR TRIM LEATHER WHITE	6007497-04-J	1	Refer to table at the end of this section for door trim compatibility
*	ASY PAD LH RR DOOR TRIM ULTF WHITE	Unrestricted	ASY PAD ARMREST BOLSTER LEFT REAR DOOR TRIM ULTRA WHITE	6007497-11-J	1	Refer to table at the end of this section for door trim compatibility
3	ASY, DCOR DOOR TRIM PULL CUP LH RR	Unrestricted	DOOR TRIM DECOR ASSEMBLY WILL PULL CUP INNER TRIM - LEFT REAR	1051389-00-A	1	Chrome trim on door panel
4	DR RR RH PURB/PVCB/PVCB BLACK	Unrestricted	DOOR PANEL - RIGHT REAR - PURB/PVCB/PVCB BLACK	1008105-11-L	1	
4	DR RR RH PURB/PVCB/PVCB TAN	Unrestricted	DOOR PANEL - RIGHT REAR - PURB/PVCB/PVCB TAN	1008105-12-L	1	
4	DR RR RH PURB/PVCB/PVCB GREY	Unrestricted	DOOR PANEL - RIGHT REAR - PURB/PVCB/PVCB GREY	1008105-13-L	1	
4	DR RR RH LTHRA/LTHRA/PVCB BLACK	Unrestricted	DOOR PANEL - RIGHT REAR - LTHRA/LTHRA/PVCB BLACK	1008105-14-L	1	
4	DR RR RH PURB/S/PUR13/PVCB BLACK PREM	Unrestricted	DR RR RH PURB/S/PUR13/PVCB BLACK PREM	1008105-49-L	1	For vehicles built on or after August 18, 2017 with option codes: LT5P
4	DR RR RH LTHRA/LTHRA/PVCB TAN	Unrestricted	DOOR PANEL - RIGHT REAR - LTHRA/LTHRA/PVCB TAN	1008105-15-L	1	
4	DR RR RH PURB/S/PUR13/PVCB CREAM PREM	Unrestricted	DR RR RH PURB/S/PUR13/PVCB CREAM PREM	1008105-50-L	1	For vehicles built on or after August 18, 2017 with option codes: LT5C
4	DR RR RH LTHRA/LTHRA/PVCB GREY	Unrestricted	DOOR PANEL - RIGHT REAR - LTHRA/LTHRA/PVCB GREY	1008105-16-L	1	
*	ASY CARRIER BELTLINE RH RR PURB	Unrestricted	ASY CARRIER BELTLINE RIGHT REAR PURB	1009438-02-E	1	Refer to table at the end of this section for door trim compatibility
*	DOOR BELTLINES LEATHER KIT	Unrestricted	DOOR BELTLINES LEATHER KIT	1103858-01-A	1	Refer to table at the end of this section for door trim compatibility
*	DOOR BELTLINES PUR NAPPA B KIT	Unrestricted	DOOR BELTLINES PUR NAPPA B KIT	1103858-02-A	1	Refer to table at the end of this section for door trim compatibility
*	ASY PAD RH RR DOOR TRIM LTHRA BLACK	Unrestricted	ASY PAD ARMREST BOLSTER RIGHT REAR DOOR TRIM LEATHER BLACK	1008115-01-J	1	Refer to table at the end of this section for door trim compatibility
*	ASY PAD RH RR DOOR TRIM LTHRA TAN	Unrestricted	ASY PAD ARMREST BOLSTER RIGHT REAR DOOR TRIM LEATHER TAN	1008115-02-J	1	Refer to table at the end of this section for door trim compatibility
*	ASY PAD RH REAR DOOR TRIM LTHRA TAN	Unrestricted	ASY PAD ARMREST BOLSTER RIGHT REAR DOOR TRIM LEATHER GREY	1008115-03-J	1	Refer to table at the end of this section for door trim compatibility
*	ASY PAD RH RR DOOR TRIM LTHRA WHT	Unrestricted	ASY PAD ARMREST BOLSTER RIGHT REAR DOOR TRIM LEATHER WHITE	1008115-04-J	1	Refer to table at the end of this section for door trim compatibility
*	ASY PAD LH RR DOOR TRIM ULTF WHITE	Unrestricted	ASY PAD ARMREST BOLSTER LEFT REAR DOOR TRIM ULTRA WHITE	6007497-11-J	1	Refer to table at the end of this section for door trim compatibility
5	ASY, DCOR DOOR TRIM PULL CUP RH RR	Unrestricted	DOOR TRIM DECOR ASSEMBLY WILL PULL CUP INNER TRIM - RIGHT REAR	1051390-00-A	1	chrome trim on door panel
6	LAMP, REFLECTOR, RED	Unrestricted	RED REFLECTOR LAMP	1007152-00-D	2	
7	BRKT - RR DOOR INR HNDL LH	Unrestricted	DOOR OPENER BRACKET - LEFT REAR	1008413-00-C	1	
8	BRKT - RR DOOR INR HNDL RH	Unrestricted	DOOR OPENER BRACKET - RIGHT REAR	1008404-00-C	1	
9	NUT HEX M6-1.00 8 CONICAL FREE SPIN WSHR	Unrestricted	NUT, HEX, M6-1.00 CONICAL FREE SPIN WASHER	1009946-00-A	6	Use on item #7. Order in quantities of 50; minimum order: 50.
10	ASY, OPENER, DOOR, LH, REAR	Unrestricted	DOOR OPENER ASSEMBLY - LEFT REAR	6007505-00-E	1	
11	ASY, OPENER, DOOR, RH, REAR	Unrestricted	DOOR OPENER ASSEMBLY - RIGHT REAR	1008131-00-E	1	
12	Interior Handle Cover LH Rear	Unrestricted	DOOR HANDLE INSERT - LEFT REAR	1007998-00-E	1	
13	Interior Handle Cover RH Rear	Unrestricted	DOOR HANDLE INSERT - RIGHT REAR	1008134-00-E	1	
14	Screw	Unrestricted	SCREW M6x16 ZINC ALUMINUM	1008780-00-A	4	
15	PALNUT TYPE-SD M5x10-15	Unrestricted	PALNUT M5x10	1009338-00-A	2	
16	M5-16 TRX WSHR	Unrestricted	TORX WASHER M5x1.8-16 ZINC	1009335-00-A	6	
17	CLIP, HEART FLEX W WSHR 70 LBS RETENTION	Unrestricted	HEART FLEX CLIP WITH WASHER - 70 LBS RETENTION	1025401-00-A	16	Order in quantities of 50; minimum order: 50. All door panel clips must be replaced after removal.
18	ASY - BRKT RR DOOR PULL CUP LH	Unrestricted	DOOR PULL CUP BRACKET ASSEMBLY - REAR LEFT	1003139-00-B	1	
19	ASY - BRKT RR DOOR PULL CUP RH	Unrestricted	DOOR PULL CUP BRACKET ASSEMBLY - REAR RIGHT	1003140-00-B	1	
20	NUT HF M6-1.00[8]ZnAl	Unrestricted	NUT M6-1.00 ZINC ALUMINUM	2007207	4	Use with item #16 and 17. Order in quantities of 25; minimum order: 25.
20	BLT,BTN,TRX,M5x16[10.9]-BK-X-SP-05	Unrestricted	BOLT, BUTTON HEAD, TORX, M5x16	1015888-00-C	4	use on item #16 and 17, if rivnuts are present
21	Insert pull cup LH door trim	Unrestricted	DOOR TRIM PULL CUP INSERT - LEFT	1002966-00-B	1	Rubber cover in pull cup.
22	Insert pull cup RH door trim	Unrestricted	DOOR TRIM PULL CUP INSERT - RIGHT	1007941-00-B	1	Rubber cover in pull cup.
23	LAMP, PUDDLE	Unrestricted	PUDDLE LAMP	1007151-00-D	2	
24	SWITCH, PWR WINDOW, PASSENGER	Unrestricted	POWER WINDOW SWITCH - PASSENGER SIDE	1003749-00-B	2	
25	BLT HF M6x1.00x18 [8.8]-D-ZnAl-W	Unrestricted	BOLT M6x1.00x18 ZINC ALUMINUM	1006529-00-A	2	Use in pull cup to secure door panel to door.
26	INDIRECT LIGHTING PAD LH, REAR DOOR	Unrestricted	DOOR INDIRECT LIGHTING PAD - LEFT REAR	1007988-00-F	1	ambient light on door panel
27	INDIRECT LIGHTING PAD RH, REAR DOOR	Unrestricted	DOOR INDIRECT LIGHTING PAD - RIGHT REAR	1008121-00-F	1	ambient light on door panel

28	SCR PAN TRX M2.5x12 Zn	Unrestricted	SCREW PAN TORX M2.5x12 ZINC	1008887-00-A	4	use for Window Switch
*	CLIP-DOOR TRIM BELT LINE	Unrestricted	CLIP-DOOR TRIM BELT LINE	1005783-00-B	10	clip underneath seal to secure door trim panel

HEADLINER

Headlining

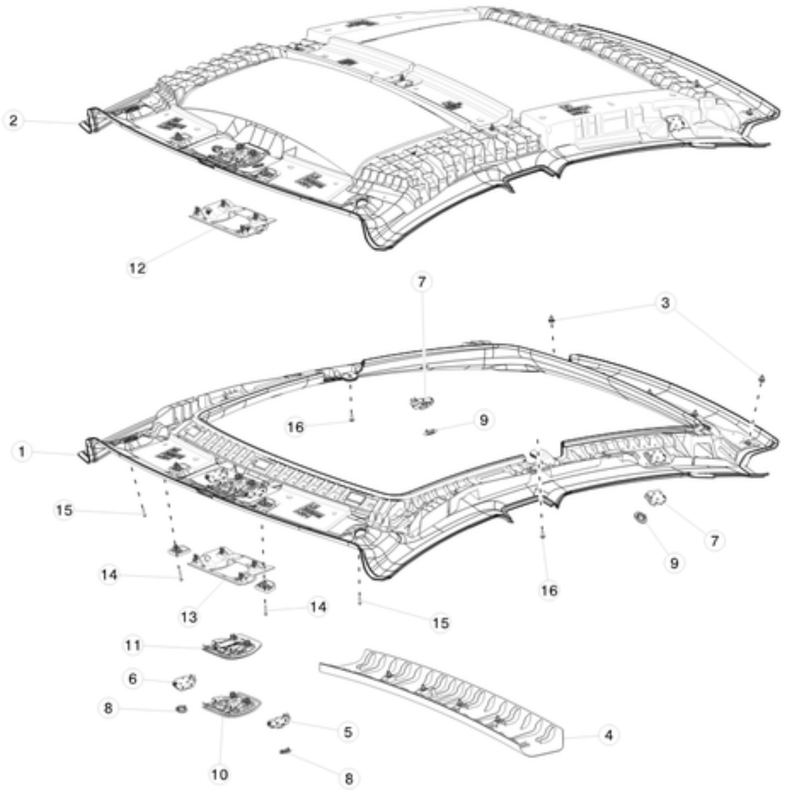

No	Part Name	Category	Part Description	Part Number	Qty	Comments
1	PANORAMIC ROOF HEADLINER ASSEMBLY WITH MONOCAM - TEXTILE	Unrestricted	PANORAMIC ROOF HEADLINER ASSEMBLY WITH MONOCAM - TEXTILE	1045936-00-C	1	For vehicles produced before October 12th. With option codes: DA01; DA02.
1	PANORAMIC ROOF HEADLINER ASSEMBLY WITH MONOCAM - ALCANTARA	Unrestricted	PANORAMIC ROOF HEADLINER ASSEMBLY WITH MONOCAM - ALCANTARA	1045936-01-D	1	For vehicles produced before October 12th. With option codes: DA01; DA02.
1	PANORAMIC ROOF HEADLINER ASSEMBLY WITH MONOCAM - ALCANTARA BLACK	Unrestricted	PANORAMIC ROOF HEADLINER ASSEMBLY WITH MONOCAM - ALCANTARA BLACK	1045936-02-D	1	For vehicles produced before October 12th. With option codes: DA01; DA02.
1	PANORAMIC ROOF HEADLINER ASSEMBLY WITH INTRUSION SENSOR AND MONOCAM - TEXTILE	Unrestricted	PANORAMIC ROOF HEADLINER ASSEMBLY WITH INTRUSION SENSOR AND MONOCAM - TEXTILE	1045938-00-C	1	For vehicles produced before October 12th. With option codes: DA01; DA02.
1	PANORAMIC ROOF HEADLINER ASSEMBLY WITH INTRUSION SENSOR AND MONOCAM - ALCANTARA	Unrestricted	PANORAMIC ROOF HEADLINER ASSEMBLY WITH INTRUSION SENSOR AND MONOCAM - ALCANTARA	1045938-01-D	1	For vehicles produced before October 12th. With option codes: DA01; DA02.
1	PANORAMIC ROOF HEADLINER ASSEMBLY WITH INTRUSION SENSOR AND MONOCAM - ALCANTARA BLACK	Unrestricted	PANORAMIC ROOF HEADLINER ASSEMBLY WITH INTRUSION SENSOR AND MONOCAM - ALCANTARA BLACK	1045938-02-D	1	For vehicles produced before October 12th. With option codes: DA01; DA02.
1	ASY PANO 1.5 HEADLINR TRIPLCAM ALC BLK	Unrestricted	PANORAMIC ROOF HEADLINER ASSEMBLY WITH TRIPLE CAM - ALCANTARA BLACK	1106015-02-D	1	For vehicles produced after October 11th, 2016. With option codes: UTAB AND RFP2 AND SP00 AND APH0/APH2/APH3
1	ASY PANO 1.5 IS HEADLINR TRIPLCAM ALC BLK	Unrestricted	PANORAMIC ROOF HEADLINER ASSEMBLY WITH INTRUSION SENSOR AND TRIPLE CAM - ALCANTARA BLACK	1106016-02-B	1	For vehicles produced after October 11th, 2016. With option codes: APH0, APH2
1	ASY PANO 1.5 HEADLINR TRIPLCAM ALCANT	Unrestricted	PANORAMIC ROOF HEADLINER ASSEMBLY WITH TRIPLE CAM - ALCANTARA WHITE	1106015-01-B	1	For vehicles produced after October 11th, 2016. With option codes: APH0, APH2

1	ASY PANO 1.5 IS HEADLINR TRIPLCAM ALCAN	Unrestricted	PANORAMIC ROOF HEADLINER ASSEMBLY WITH INTRUSION SENSOR AND TRIPLE CAM - ALCANTARA WHITE	1106016-01-B	1	For vehicles produced after October 11th, 2016. With option codes: APH0, APH2
1	ASY, HDLNR FXD GLS TRPL CAM, WHT ALCAN	Unrestricted	ASY, HEADLINER FIXED GLASS TRIPLE CAM, WHITE ALCANTARA, PANO ROOF	1062175-01-B	1	For vehicles with option code: RFFG
1	ASY, HDLNR FXD GLS TRPL CAM, WHT ALCAN	Unrestricted	ASY, HEADLINER FIXED GLASS ROOF, TRIPLE CAM, WHITE ALCANTARA , FULL GLASS ROOF	1062175-01-F	1	For vehicles with option code: RFFG
1	ASY, HDLNR FXD GLS TRPL CAM, ALCANTARA BLK	Unrestricted	ASY, HEADLINER FIXED GLASS ROOF, TRIPLE CAM, ALCANTARA BLACK, FULL GLASS ROOF	1062175-02-F	1	For vehicles with option code: RFFG AND UTAB AND SP00
2	HEADLINER MONOCAM, MONOREVERSE	Unrestricted	HEADLINER ASSEMBLY WITH MONOCAM - TEXTILE	1052273-00-A	1	For vehicles produced before October 12th. With option codes: DA01; DA02
2	HEADLINER MONOCAM, ALCANTARA WHITE	Unrestricted	HEADLINER ASSEMBLY WITH MONOCAM - ALCANTARA	1052273-01-B	1	For vehicles produced before October 12th. With option codes: DA01; DA02.
2	ASY, HEADLINER, MONOCAM, ALCANTARA BLCK	Unrestricted	HEADLINER ASSEMBLY WITH MONOCAM - ALCANTARA BLACK	1052273-02-A	1	For vehicles produced before October 12th. With option codes: DA01; DA02.
2	ASY, HEADLINER IS MONOCAM, MONOREVERSE	Unrestricted	HEADLINER ASSEMBLY WITH INTRUSION SENSOR AND MONOCAM - TEXTILE	1052274-00-A	1	For vehicles produced before October 12th. With option codes: DA01; DA02.
2	ASY, HEADLINER IS MONOCAM, ALCAN WHT	Unrestricted	HEADLINER ASSEMBLY WITH INTRUSION SENSOR AND MONOCAM - ALCANTARA	1052274-01-A	1	For vehicles produced before October 12th. With option codes: DA01; DA02.
2	ASY, HEADLINER IS MONOCAM, ALCAN BLK	Unrestricted	HEADLINER ASSEMBLY WITH INTRUSION SENSOR AND MONOCAM - ALCANTARA BLACK	1052274-02-A	1	For vehicles produced before October 12th. With option codes: DA01; DA02.
2	ASY, HEADLINER IS TRPL CAM, ALCANTARA	Unrestricted	HEADLINER ASSEMBLY WITH INTRUSION SENSOR AND TRIPLE CAM - ALCANTARA WHITE	1062162-01-B	1	For vehicles produced after October 11th, 2016. With option codes: APH0, APH2.
2	ASY, HEADLINER TRPL CAM, ALCANTARA	Unrestricted	HEADLINER ASSEMBLY WITH TRIPLE CAM - ALCANTARA WHITE	1062153-01-B	1	For vehicles produced after October 11th, 2016. With option codes: APH0, APH2.
2	ASY, HEADLINER IS TRPL CAM, BLK ALCAN	Unrestricted	HEADLINER ASSEMBLY WITH INTRUSION SENSOR AND TRIPLE CAM - ALCANTARA BLACK	1062162-02-B	1	For vehicles produced after October 11th, 2016. With option codes: APH0, APH2.
2	ASY, HEADLINER TRPL CAM, BLK ALCANTARA	Unrestricted	HEADLINER ASSEMBLY WITH TRIPLE CAM - ALCANTARA BLACK	1062153-02-B	1	For vehicles produced after October 11th, 2016. With option codes: APH0, APH2.
2	ASY HDLNR FXD GLS IS TRPL CAM PROVID BLK	Unrestricted	ASY HDLNR FXD GLS IS TRPL CAM PROVIDENCE BLK	1062180-04-F	1	For vehicles produced after October 11th, 2016. With option codes: APH0, APH2 and RFFG AND UTPB AND SP01
2	ASY HDLNR FXD GLS TRPL CAM PROVID BLK	Unrestricted	ASY HDLNR FXD GLS TRPL CAM PROVIDENCE BLK	1062175-04-F	1	For vehicles produced after October 11th, 2016. With option codes: APH0, APH2 and RFFG AND UTPB AND SP00
*	Trim Clip, TRW 1030063840	Unrestricted	TRIM CLIP,8MM HOLE,2.5MM PANEL	1014969-00-A	3	Order in quantities of 100; minimum order: 100.
3	TRIM CLIP NIFCO 12733	Unrestricted	TRIM CLIP 12733	1011813-00-A	5	Order in quantities of 100; minimum order: 100.
4	COVER - PANORAMIC ROOF BOW	Unrestricted	PANORAMIC ROOF MIDDLE COVER	1008203-00-F	1	
4	COVER ASY PANO ROOF BOW ALCANTARA WHITE	Unrestricted	PANORAMIC ROOF MIDDLE COVER ALCANTARA	1039464-01-C	1	
4	COVER ASY PANO ROOF BOW ALCANTARA BLACK	Unrestricted	PANORAMIC ROOF MIDDLE COVER ALCANTARA BLACK	1039464-02-C	1	
5	MAP LIGHT DRIVER	Unrestricted	INTERIOR LIGHT DRIVER	N/A	1	Comes with 1013687-00-F
6	MAP LIGHT PASSENGER	Unrestricted	INTERIOR LIGHT PASSENGER	NA	1	Comes with 1013687-00-F
7	REAR INTERIOR LIGHT LH/RH	Unrestricted	REAR INTERIOR LIGHT LEFT AND RIGHT	1002484-00-D	2	
8	INTERIOR FRT LIGHT BEZEL LH/RH - FOG - SMALL	Unrestricted	INTERIOR FRONT LIGHT BEZEL WHITE	1023772-00-A	2	
8	INTERIOR FRT LIGHT BEZEL LH/RH - BLACK - SMALL	Unrestricted	INTERIOR FRONT LIGHT BEZEL BLACK	1023772-02-A	2	
9	INTERIOR RR LIGHT BEZEL - FOG	Unrestricted	INTERIOR REAR LIGHT BEZEL WHITE	1002547-00-B	2	
9	INTERIOR RR LIGHT BEZEL - BLACK	Unrestricted	INTERIOR REAR LIGHT BEZEL BLACK	1002547-02-B	2	
10	ASSY COMPLETE - OVERHEAD CONSOLE - FOG	Unrestricted	OVERHEAD CONSOLE ASSEMBLY - WHITE	1002404-00-B	1	includes microphone
10	ASSY COMPLETE - OVERHEAD CONSOLE - BLACK	Unrestricted	OVERHEAD CONSOLE ASSEMBLY - BLACK	1002404-02-B	1	includes microphone
11	ASSY COMPLETE - OVERHEAD CONSOLE - INTRSN SNSR FOG	Unrestricted	OVERHEAD CONSOLE ASSEMBLY WITH INTRUSION SENSOR - WHITE	1021099-00-B	1	includes microphone and intrusion sensor
11	ASSY COMPLETE - OVERHEAD CONSOLE - INTRSN SNSR BLACK	Unrestricted	OVERHEAD CONSOLE ASSEMBLY WITH INTRUSION SENSOR - BLACK	1021099-02-B	1	includes microphone and intrusion sensor
12	OVERHEAD CONSOLE BACKING PLATE ASSEMBLY	Unrestricted	OVERHEAD CONSOLE BACKING PLATE ASSEMBLY	1013687-00-F	1	Includes backing plate and left and right map light.
14	BOLT,TRX,SOCKET,M4.2x29[St]	Unrestricted	BOLT, TORX, SOCKET, M4.2x29	1013810-00-A	2	For center support
*	TAPE,HEADLINER,20MM WIDE,POLYOLEFIN,HPSA	Unrestricted	HEADLINER TAPE, 20MM WIDE, POLYOLEFIN	1020389-00-A	520mm	Comes in 50m rolls. Order in increments of 50,000mm.
15	SCR,M4.8x19,SFHC,TRX,STL,ZnAl,ST	Unrestricted	BOLT, TORX, M4.8X24 STEEL ZINC ALUMINUM	1011958-00-C	2	
*	CLIP, TRIM, H16	Unrestricted	CLIP, TRIM, H16	1011458-00-A	3	
16	BLT,BTN,TRX,M5x16[TBD]-01	Unrestricted	BOLT, BUTTON HEAD, TORX, M5x16	1018693-00-B	2	
*	MICROPHONE	Unrestricted	MICROPHONE	1004812-00-B	2	Included with overhead console.

INTERIOR MIRROR AND SUN VISORS

Rearview Mirror

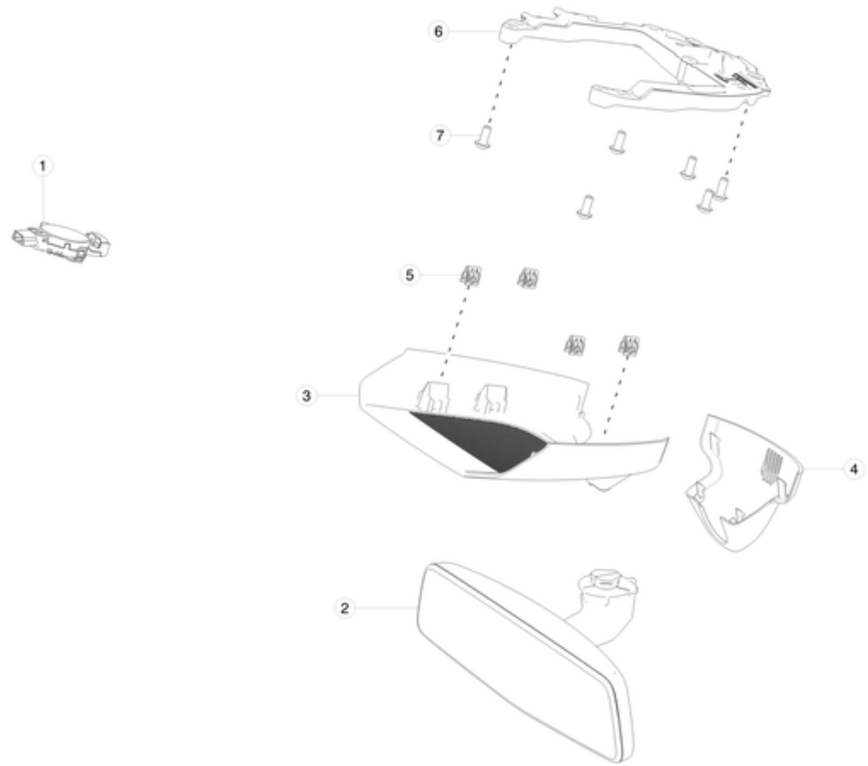

No	Part Name	Category	Part Description	Part Number	Qty	Comments
1	MODULE - SENSOR - LIGHT/RAIN	Unrestricted	LIGHT AND RAIN SENSOR	1011582-00-C	1	
2	REAR VIEW MIRROR - MONOCAM	Unrestricted	REAR VIEW MIRROR - MONOCAM	1041486-00-C	1	OK to replace -B. Use with 1041486-00-A. For vehicles produced before October 12th. With option codes: DA01; DA02
2	ASM, MS RR VIEW MIRROR TRIPLE CAM	Unrestricted	Model S Rear View Mirror Triple Cam	1092610-00-C	1	For vehicles produced after October 11th, 2016. With option codes: APH0, APH2
3	MIRROR COVER - BACK	Unrestricted	MIRROR COVER - BACK	1037573-00-C	1	For vehicles produced before October 12th. With option codes: DA01; DA02.
4	MIRROR COVER - FRONT	Unrestricted	MIRROR COVER - FRONT	1037574-00-C	1	For vehicles produced before October 12th. With option codes: DA01; DA02.
*	MS RR VIEW MIRROR CVR TRIPLE CAM	Unrestricted	MIRROR COVER TRIPLE CAM	1092615-00-C	1	For vehicles produced after October 11th, 2016. With option codes: APH0, APH2
*	MS RR VIEW MIRROR LOWER CVR TRIPLE CAM	Unrestricted	REAR VIEW MIRROR LOWER COVER TRIPLE CAM	1092616-00-C	1	For vehicles produced after October 11th, 2016. With option codes: APH0, APH2
5	CLIP, U-BELL, 5.8 X 1.5-3.5	Unrestricted	CLIP, U-BELL, 5.8 X 1.5-3.5	1008245-00-A	4	
6	MIRROR BRACKET CARRIER	Unrestricted	MIRROR BRACKET CARRIER	1043428-00-A	1	Can also order assembly 1038476-00-A which includes this carrier
7	SCREW TORX M5 x 12 TRUSS HEAD (T25)	Unrestricted	TRUSS HEAD SCREW M5X12 WITH T25 TORX DRIVE	1011784-00-A	6	Use with 1041486-00-A
*	MS TRIPLE CAM GLARE SHIELD	Unrestricted	MODEL S TRIPLE CAM GLARE SHIELD	1092617-00-C	1	For vehicles produced after October 11th, 2016. With option codes: APH0, APH2
*	TRIPLE CAM RR VIEW MIRROR MOUNT PLATE	Unrestricted	REAR VIEW MIRRO MOUNT PLATE	1098491-00-B	1	For vehicles produced after October 11th, 2016. With option codes: APH0, APH2

Sun Visor

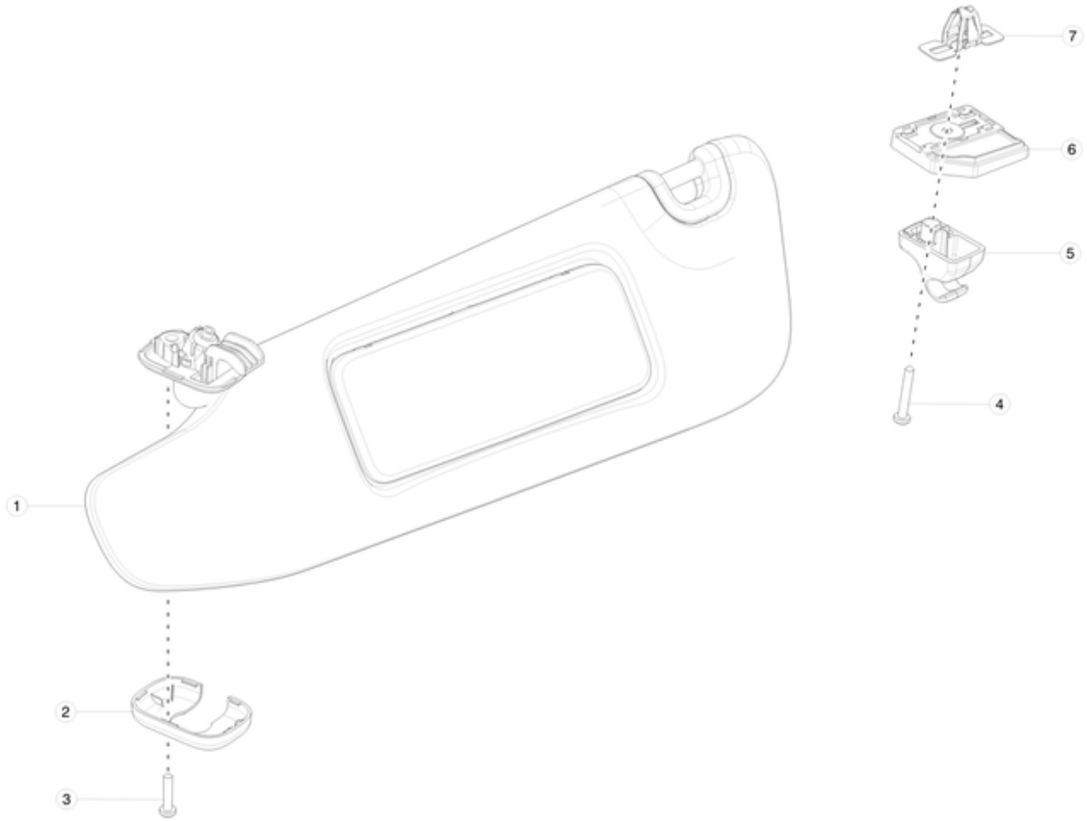

No	Part Name	Category	Part Description	Part Number	Qty	Comments
1	SUN VISOR ASSEMBLY - LEFT - TEXTILE - US - LARGE	Unrestricted	SUN VISOR ASSEMBLY - LEFT - TEXTILE - US - LARGE	1050619-00-A	1	
1	SUN VISOR ASSEMBLY - LEFT - ALCANTARA - US - LARGE	Unrestricted	SUN VISOR ASSEMBLY - LEFT - ALCANTARA - US - LARGE	1050619-01-A	1	
1	SUN VISOR ASSEMBLY - LEFT - ALCANTARA BLACK - US - LARGE	Unrestricted	SUN VISOR ASSEMBLY - LEFT - ALCANTARA BLACK - US - LARGE	1050619-02-A	1	
1	SUN VISOR ASSEMBLY - RIGHT - TEXTILE - US - LARGE	Unrestricted	SUN VISOR ASSEMBLY - RIGHT - TEXTILE - US - LARGE	1050620-00-A	1	
1	SUN VISOR ASSEMBLY - RIGHT - ALCANTARA - US - LARGE	Unrestricted	SUN VISOR ASSEMBLY - RIGHT - ALCANTARA - US - LARGE	1050620-01-A	1	
1	SUN VISOR ASSEMBLY - RIGHT - ALCANTARA BLACK - US - LARGE	Unrestricted	SUN VISOR ASSEMBLY - RIGHT - ALCANTARA BLACK - US - LARGE	1050620-02-A	1	
2	COVER BRACKET SUN VISOR OUTER - FOG	Unrestricted	SUN VISOR OUTER COVER BRACKET - TEXTILE	1002480-00-B	2	use with Textile/monoreverse parts
2	COVER BRACKET SUN VISOR OUTER - WHT	Unrestricted	SUN VISOR OUTER COVER BRACKET - ALCANTARA	1002480-01-B	2	use with Alcantara parts
2	COVER BRACKET SUN VISOR OUTER - BLK	Unrestricted	SUN VISOR OUTER COVER BRACKET - ALCANTARA BLACK	1002480-02-B	2	
3	BLT,TPG,CS,TRX,M4.8x24[St]-C-BK-07	Unrestricted	BOLT, TORX, M4.8X24 STEEL ZINC ALUMINUM	1011958-00-C	2	
4	BOLT,TRX,SOCKET,M4.2x29[St]	Unrestricted	BOLT, TORX, SOCKET, M4.2x29	1013810-00-A	2	
5	CENTER SUPPORT W/COVER SUNVISOR FOG	Unrestricted	SUNVISOR CENTER SUPPORT WITH COVER - TEXTILE	1002479-00-D	2	use with Textile/monoreverse parts
5	CENTER SUPPORT W/COVER SUNVISOR WHT	Unrestricted	SUNVISOR CENTER SUPPORT WITH COVER - ALCANTARA	1002479-01-D	2	use with Alcantara parts
5	CENTER SUPPORT W/COVER SUNVISOR BLACK	Unrestricted	SUNVISOR CENTER SUPPORT WITH COVER - ALCANTARA BLACK	1002479-02-D	2	use with Alcantara parts
6	Backplate - Sunvisor Center Support LH	Unrestricted	SUNVISOR CENTER SUPPORT BACKPLATE - LEFT	1013831-00-C	1	

6	Backplate - Sunvisor Center Support RH	Unrestricted	SUNVISOR CENTER SUPPORT BACKPLATE - RIGHT	1013832-00-C	1	
7	High Retension Clip-Termax2687	Unrestricted	CLIP, LONG BASE 2 WING, METAL	1013811-00-B	2	

INTERIOR TRIM

A - B and C Post Interior Trim

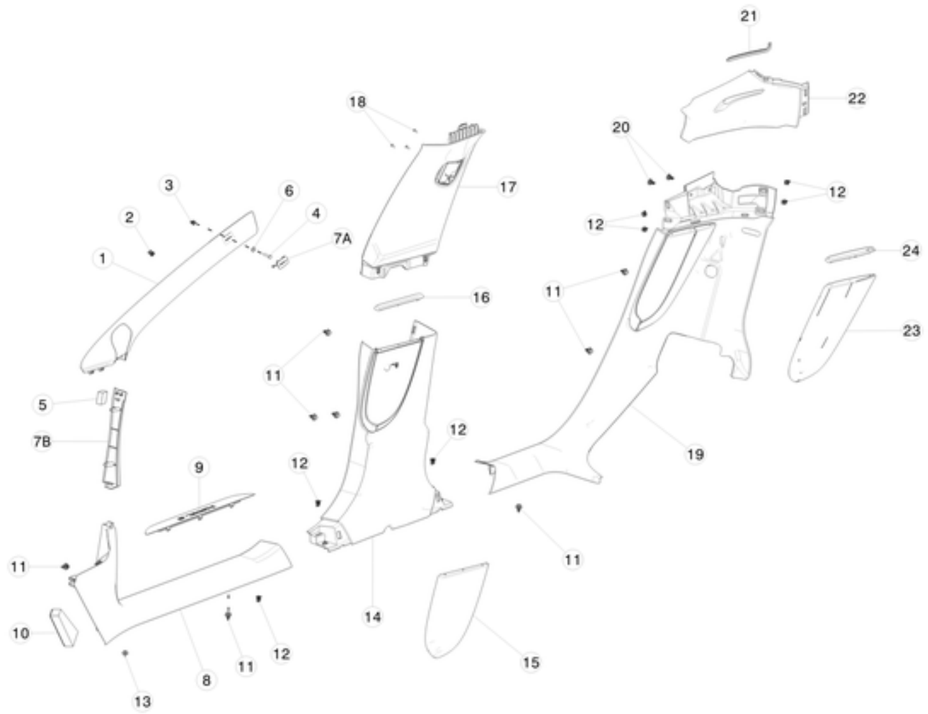

No	Part Name	Category	Part Description	Part Number	Qty	Comments
1	ASY, A-PLR UPPER TRIM LH, ALCANTARA	Unrestricted	A-PILLAR UPPER TRIM ASSEMBLY - LEFT ALCANTARA	1002488-00-K	1	
1	ASY, A-PLR UPPER TRIM LH, ALCANTARA, BLK	Unrestricted	A-PILLAR UPPER TRIM ASSEMBLY - LEFT ALCANTARA BLACK	1002488-02-K	1	
1	ASY, A-PLR UPPER TRIM RH, MONOREVERSE	Unrestricted	A-PILLAR UPPER TRIM ASSEMBLY - RIGHT TEXTILE	1007441-00-J	1	
1	ASY, A-PLR UPPER TRIM RH, ALCANTARA	Unrestricted	A-PILLAR UPPER TRIM ASSEMBLY - RIGHT ALCANTARA	1007440-00-K	1	
1	ASY, A-PLR UPPER TRIM RH, ALCANTARA, BLK	Unrestricted	A-PILLAR UPPER TRIM ASSEMBLY - RIGHT ALCANTARA BLACK	1007440-02-K	1	
2	CLIP, UBELL, PNL 1.5-3.5 SLT 6.0x 21.(	Unrestricted	CLIP, U-BELL, PANEL 1.5-3.5 SLOTTED 6.0x 21.0	1011978-00-A	2	Order in quantities of 50; minimum order: 50.
3	GROM, SCR, M5 SELF TAP, 0.8-2.5, 7MM SQ	Unrestricted	GROMMET, SCREW, M5 SELF-TAPPING	1003209-00-A	2	Order in quantities of 100; minimum order: 100.
4	BLT,TPG,HEX,FLG,5x30[St]-07	Unrestricted	BOLT, HEX, FLANGE, 5x30	1016389-00-A	2	
5	A-PILLAR UPPER STANDOFF, FOAM NEOPRENE	Unrestricted	A-PILLAR UPPER STANDOFF, FOAM NEOPRENE	1020856-00-A	4	Order in quantities of 3; minimum order: 3.
6	WSHR,6.4,14.3,Zinc Steel	Unrestricted	WASHER, 6.4X14.3MM OUTSIDE DIAMTER, ZINC STEEL	1022661-00-A	2	
7B	A-PILLAR TRIM MIDDLE LH	Unrestricted	A-PILLAR TRIM MIDDLE LEFT	1002515-00-D	1	
7B	A-PILLAR TRIM MIDDLE RH	Unrestricted	A-PILLAR TRIM MIDDLE RIGHT	1007711-00-D	1	
8	ASY, A PILLAR TRIM LOWER LH	Unrestricted	A-PILLAR TRIM LOWER ASSEMBLY LEFT - WITH INSERT	1030390-00-E	1	Includes 1030392-00-D
8	ASY, A PILLAR TRIM LOWER RH	Unrestricted	A-PILLAR TRIM LOWER ASSEMBLY RIGHT - WITH INSERT	1030391-00-E	1	Includes 1030392-00-D

9	A PILLAR LOWER TRIM, BASE SILL INSERT	Unrestricted	A-PILLAR BASE SILL LOWER TRIM INSERT	1030392-00-D	2	If not available order 1030391-00-E or 1030390-00-E
10	A PILLAR LOWER FOAM STANDOFF W/ DOUBLE SIDE TAPE	Unrestricted	A-PILLAR LOWER FOAM STANDOFF WITH DOUBLE SIDE TAPE	1022662-00-A	2	
11	Trim Clip, TRW 1030063840	Unrestricted	TRIM CLIP,8MM HOLE,2.5MM PANEL	1014969-00-A	16	Order in quantities of 100; minimum order: 100.
12	ERGO CLIP, 2.5-3.5 PNL,12 W,15.27 L	Unrestricted	ERGO CLIP, 2.5 - 3.5MM PLASTIC PANEL, 12MM WIDE X 15.27MM LONG	1018220-00-A	14	
13	CLIP, TRIM, 1.6-2.0, OD 8.0	Unrestricted	CLIP, TRIM, 1.6-2.0MM HOLE, OUTSIDE DIAMETER 8.0	1009755-00-A	4	
14	ASY B-PLR TRIM LOWER LH, LTHR BLK - NON-WRAPPED	Unrestricted	B-PILLAR TRIM LOWER ASSEMBLY LEFT - LEATHER BLACK - NON-WRAPPED	1024631-02-C	1	
14	ASY, B-PLR TRIM LOWER LH, PUR BLK	Unrestricted	ASY, B-PLR TRIM LOWER LH, PUR BLK	1024631-21-F	1	For vehicles built on or after August 18, 2017 with option code: LT5P
14	ASY B-PLR TRIM LOWER LH, LTHR TAN - NON-WRAPPED	Unrestricted	B-PILLAR TRIM LOWER ASSEMBLY LEFT - LEATHER TAN - NON-WRAPPED	1024631-03-C	1	
14	ASY, B-PLR TRIM LOWER LH, PUR WHITE	Unrestricted	ASY, B-PLR TRIM LOWER LH, PUR WHITE	1024631-17-C	1	Option codes: LT1W, LT3W, LT4W, LT5W
14	ASY, B-PLR TRIM LOWER LH, PUR CREAM	Unrestricted	ASY, B-PLR TRIM LOWER LH, PUR CREAM	1024631-22-F	1	For vehicles built on or after August 18, 2017 with option codes: LT5C
14	ASY B-PLR TRIM LOWER LH, LTHR GREY - NON-WRAPPED	Unrestricted	B-PILLAR TRIM LOWER ASSEMBLY LEFT - LEATHER GRAY - NON-WRAPPED	1024631-05-C	1	
14	ASY, B-PLR TRIM LOWER LH, PVC BLK	Unrestricted	B-PILLAR TRIM LOWER ASSEMBLY LEFT - PVC BLACK - NON-WRAPPED	1024631-14-C	1	
14	ASY B-PLR TRIM LOWER LH, PUR GREY - NON-WRAPPED	Unrestricted	B-PILLAR TRIM LOWER ASSEMBLY LEFT - PUR GRAY - NON-WRAPPED	1024631-15-C	1	
14	ASY B-PLR TRIM LOWER LH, PUR TAN - NON-WRAPPED	Unrestricted	B-PILLAR TRIM LOWER ASSEMBLY LEFT - PUR TAN - NON-WRAPPED	1024631-16-C	1	
14	ASY BLSTR B-PLR TRIM LOWER RH, LTHR BLK - NON-WRAPPED	Unrestricted	B-PILLAR TRIM LOWER ASSEMBLY RIGHT - LEATHER BLACK - NON-WRAPPED	1024686-02-C	1	
14	ASY, B-PLR TRIM LOWER RH, PUR BLK	Unrestricted	ASY, B-PLR TRIM LOWER RH, PUR BLK	1024686-21-F	1	For vehicles built on or after August 18, 2017 with option codes: LT5P
14	ASY B-PLR TRIM LOWER RH, LTHR TAN - NON-WRAPPED	Unrestricted	B-PILLAR TRIM LOWER ASSEMBLY RIGHT - LEATHER TAN - NON-WRAPPED	1024686-03-C	1	
14	ASY, B-PLR TRIM LOWER RH, PUR CREAM	Unrestricted	ASY, B-PLR TRIM LOWER RH, PUR CREAM	1024686-22-F	1	For vehicles built on or after August 18, 2017 with option codes: LT5C
14	ASY B-PLR TRIM LOWER RH, LTHR GREY - NON-WRAPPED	Unrestricted	B-PILLAR TRIM LOWER ASSEMBLY RIGHT - LEATHER GREY - NON-WRAPPED	1024686-05-C	1	
14	ASY, B-PLR TRIM LOWER RH, PVC BLK	Unrestricted	B-PILLAR TRIM LOWER ASSEMBLY RIGHT - PVC BLACK - NON-WRAPPED	1024686-14-C	1	
14	ASY, B-PLR TRIM LOWER RH, PVC GREY	Unrestricted	B-PILLAR TRIM LOWER ASSEMBLY RIGHT - PVC GRAY - NON-WRAPPED	1024686-15-C	1	
14	ASY, B-PLR TRIM LOWER RH, PVC TAN	Unrestricted	B-PILLAR TRIM LOWER ASSEMBLY RIGHT - PVC TAN - NON-WRAPPED	1024686-16-C	1	
14	ASY, B-PLR TRIM LOWER RH, PUR WHITE	Unrestricted	ASY, B-PLR TRIM LOWER RH, PUR WHITE	1024686-17-C	1	Option codes: LT1W, LT3W, LT4W, LT5W
17	ASY, B-PLR UPPER TRIM LH, MONOREVERSE, 85MM D-RING	Unrestricted	B-PILLAR UPPER TRIM ASSEMBLY - LEFT TEXTILE WITH 85MM HIGHER D-RING	1021612-01-B	1	
17	ASY, B-PLR UPPER TRIM LH, ALCANTARA, 85MM D-RING	Unrestricted	B-PILLAR UPPER TRIM ASSEMBLY - LEFT ALCANTARA WHITE WITH 85MM HIGHER D-RING	1021612-00-A	1	
17	ASY, B-PLR UPPER TRIM LH, ALCANTARA, BLK, 85MM D-RING	Unrestricted	B-PILLAR UPPER TRIM ASSEMBLY - LEFT ALCANTARA BLACK WITH 85MM HIGHER D-RING	1021612-02-A	1	
17	ASY, B-PLR UPPER TRIM RH, ALCANTARA, 85MM D-RING	Unrestricted	B-PILLAR UPPER TRIM ASSEMBLY - RIGHT ALCANTARA WHITE WITH 85MM HIGHER D-RING	1021613-00-A	1	
17	ASY, B-PLR UPPER TRIM RH, ALCANTARA, BLK, 85MM D-RING	Unrestricted	B-PILLAR UPPER TRIM ASSEMBLY - RIGHT ALCANTARA BLACK WITH 85MM HIGHER D-RING	1021613-02-A	1	
18	SCR,M4-1.46X10,PT,TRX,WSHR,ZnBlue	Unrestricted	SCREW, M4-1.46X10MM, MATPOINT,TORX, WASHER, ZINC NICKEL BLACK	1013254-00-B	6	Order in quantities of 50; minimum order: 50.
19	ASY C-PILLAR TRIM LWR LH LTHR BLK	Unrestricted	C-PILLAR LOWER TRIM ASSEMBLY - LEFT LEATHER BLACK	1051768-02-C	1	
19	ASY C-PILLAR TRIM LOWER LH PUR BLK	Unrestricted	ASY C-PILLAR TRIM LOWER LH PUR BLK	1051768-21-E	1	For vehicles built on or after August 18, 2017 with option codes: LT5P
19	ASY C-PILLAR TRIM LWR LH LTHR TAN	Unrestricted	C-PILLAR LOWER TRIM ASSEMBLY - LEFT LEATHER TAN	1051768-03-C	1	
19	ASY C-PILLAR TRIM LOWER LH PUR CREAM	Unrestricted	ASY C-PILLAR TRIM LOWER LH PUR CREAM	1051768-22-E	1	For vehicles built on or after August 18, 2017 with option codes: LT5C
19	ASY C-PILLAR TRIM LWR LH LTHR GREY	Unrestricted	C-PILLAR LOWER TRIM ASSEMBLY - LEFT LEATHER GRAY	1051768-05-C	1	
19	ASY, C-PLR TRIM LOWER LH, PVC-B BLK	Unrestricted	C-PILLAR LOWER TRIM ASSEMBLY - LEFT PVC-B BLACK	1051768-14-C	1	
19	ASY, C-PLR TRIM LOWER LH, PVC-B GREY	Unrestricted	C-PILLAR LOWER TRIM ASSEMBLY - LEFT PVC-B GRAY	1051768-15-C	1	
19	ASY, C-PLR TRIM LOWER LH, PVC-B TAN	Unrestricted	C-PILLAR LOWER TRIM ASSEMBLY - LEFT PVC-B TAN	1051768-16-C	1	
19	ASY C-PILLAR TRIM LWR RH LTHR BLK	Unrestricted	C-PILLAR LOWER TRIM ASSEMBLY - RIGHT LEATHER BLACK	1051769-02-C	1	
19	ASY, C-PLR TRIM LOWER RH, PUR BLK	Unrestricted	ASY, C-PLR TRIM LOWER RH, PUR BLK	1051769-21-E	1	For vehicles built on or after August 18, 2017 with option codes: LT5P
19	ASY C-PILLAR TRIM LWR RH LTHR TAN	Unrestricted	C-PILLAR LOWER TRIM ASSEMBLY - RIGHT LEATHER TAN	1051769-03-C	1	

19	ASY C-PILLAR TRIM LOWER RH PUR CREAM	Unrestricted	ASY C-PILLAR TRIM LOWER RH PUR CREAM	1051769-22-E	1	For vehicles built on or after August 18, 2017 with option codes: LT5C
19	ASY C-PILLAR TRIM LWR RH LTHR GREY	Unrestricted	C-PILLAR LOWER TRIM ASSEMBLY - RIGHT LEATHER GRAY	1051769-05-C	1	
19	ASY, C-PLR TRIM LOWER RH, PVC-B BLK	Unrestricted	C-PILLAR LOWER TRIM ASSEMBLY - RIGHT PVC-B BLACK	1051769-14-C	1	
19	ASY, C-PLR TRIM LOWER RH, PVC-B GREY	Unrestricted	C-PILLAR LOWER TRIM ASSEMBLY - RIGHT PVC-B GRAY	1051769-15-C	1	
19	ASY, C-PLR TRIM LOWER RH, PVC-B TAN	Unrestricted	C-PILLAR LOWER TRIM ASSEMBLY - RIGHT PVC-B TAN	1051769-16-C	1	
20	RVT PUSH-PULL 8X18X20.0	Unrestricted	RIVET 8X18X20.0	1006521-00-A	4	Order in quantities of 50; minimum order: 50.
22	ASY C-PILLAR MIDDLE LH	Unrestricted	MIDDLE C-PILLAR TRIM ASSEMBLY - LEFT	1024730-00-B	1	
22	ASY C-PILLAR MIDDLE RH	Unrestricted	MIDDLE C-PILLAR TRIM ASSEMBLY - RIGHT	1024732-00-B	1	

Interior Trunk Trim Panels

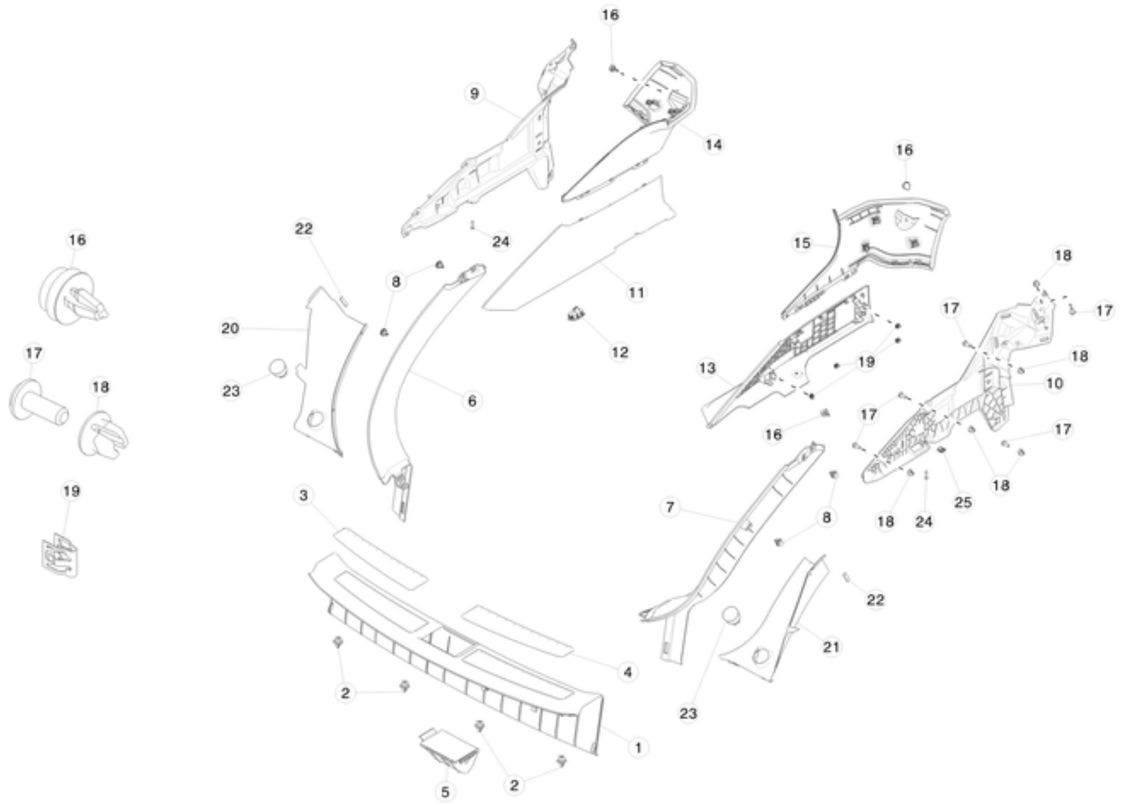

No	Part Name	Category	Part Description	Part Number	Qty	Comments
1	ASY, SILL TRUNK, BASE	Unrestricted	TRUNK SILL ASSEMBLY - PLASTIC SILL PLATES	1010824-01-D	1	
2	CLIP, HEART FLEX W WSHR 70 LBS RETENTION	Unrestricted	CLIP, HEART FLEX WITH WASHER, 70 LBS RETENTION	1025401-00-A	4	Order in quantities of 50; minimum order: 50.
3	COVER, SILL TRUNK LH	Unrestricted	COVER, SILL TRUNK LH	NA	1	TRUNK SILL ASSEMBLY
4	COVER, SILL TRUNK RH	Unrestricted	COVER, SILL TRUNK RH	NA	1	TRUNK SILL ASSEMBLY
5	COVER, TRUNK STRIKER	Unrestricted	COVER, TRUNK STRIKER	NA	1	TRUNK SILL ASSEMBLY
6	TRIM, GARNISH, TRUNK SIDE, LH	Unrestricted	TRUNK SIDE GARNISH TRIM - LEFT	1009065-00-C	1	
7	TRIM, GARNISH, TRUNK SIDE, RH	Unrestricted	TRUNK SIDE GARNISH TRIM - RIGHT	1009066-00-C	1	
8	Trim Clip, TRW 1030063840	Unrestricted	TRIM CLIP,8MM HOLE,2.5MM PANEL	1014969-00-A	4	Order in quantities of 100; minimum order: 100.
9	BRKT, C-PILLAR, LH	Unrestricted	C-PILLAR BRACKET - LEFT	1009272-00-F	1	
10	BRKT, C-PILLAR, RH	Unrestricted	C-PILLAR BRACKET - RIGHT	1009273-00-F	1	
11	ASY, C-PILLAR REAR LH	Unrestricted	C-PILLAR REAR TRIM ASSEMBLY - LEFT	1016334-00-E	1	
11	ASY, C-PILLAR REAR LH, 3RD ROW SEAT	Unrestricted	C-PILLAR REAR TRIM ASSEMBLY WITH 3RD ROW SEAT - LEFT	1016335-00-C	1	
12	POWER LIFTGATE SWITCH, 3RD ROW SEATS	Unrestricted	SWITCH FOR 3RD ROW SEAT POWERED LIFTGATE	6008902-00-A	1	
12	NON-POWER LIFTGATE SWITCH, 3RD ROW SEATS	Unrestricted	SWITCH FOR 3RD ROW SEAT NON-POWERED LIFTGATE	1008173-00-A	1	
13	ASY, C-PILLAR REAR RH	Unrestricted	C-PILLAR REAR TRIM ASSEMBLY - RIGHT	1016337-00-D	1	
14	ASY C-PILLAR TRIM UPR LH - TEXTILE FOG	Unrestricted	C-PILLAR UPPER TRIM ASSEMBLY - LEFT TEXTILE	1002510-00-C	1	

14	ASY C-PILLAR TRIM UPR LH ALCANTARA WHITE	Unrestricted	C-PILLAR UPPER TRIM ASSEMBLY - LEFT ALCANTARA	1007457-00-C	1	
14	ASY C-PILLAR TRIM UPR LH ALCANTARA, BLK	Unrestricted	C-PILLAR UPPER TRIM ASSEMBLY - LEFT ALCANTARA BLACK	1007457-02-C	1	
15	ASY C-PILLAR TRIM UPR RH TEXTILE FOG	Unrestricted	C-PILLAR UPPER TRIM ASSEMBLY - RIGHT TEXTILE	1007437-00-C	1	
15	ASY C-PILLAR TRIM UPR RH ALCANTARA WHITE	Unrestricted	C-PILLAR UPPER TRIM ASSEMBLY - RIGHT ALCANTARA	1007458-00-C	1	
15	ASY C-PILLAR TRIM UPR RH ALCANTARA, BLK	Unrestricted	C-PILLAR UPPER TRIM ASSEMBLY - RIGHT ALCANTARA BLACK	1007458-02-C	1	
16	TRIM CLIP, ITW M17-0680-01	Unrestricted	TRIM CLIP 1.7 TO 3MM PANEL WITH 7MM HOLE	1016078-00-A	4	Order in quantities of 50; minimum order: 50.
17	SCR,TPG,HEX,M6x16[St]-07	Unrestricted	SCREW, HEX, M6x16	1015863-00-A	8	Order in quantities of 100; minimum order: 100.
18	GROMMET 11F 5	Unrestricted	GROMMET FOR M6 THREADS	1006642-00-A	10	Order in quantities of 50; minimum order: 50.
18	SCREW GROMMET,M6,8.3w,10 h,Nifco 1Z19	Unrestricted	SCREW GROMMET,M6, 8.3MM WIDE, 10MM HIGH	1012734-00-A	10	
19	Clip - Retainer - U-BELL	Unrestricted	U-BELL CLIP, 5.8 X 1.5-3.5	1008245-00-A	8	
20	TRIM LIFTGATE TROUGH LH	Unrestricted	LIFTGATE TROUGH TRIM - LEFT	1021437-00-D	1	
21	TRIM LIFTGATE TROUGH RH	Unrestricted	LIFTGATE TROUGH TRIM - RIGHT	1021438-00-D	1	
22	TAPE, DBL SIDED ADHESIVE, TROUGH TRIM	Unrestricted	DOUBLE SIDED ADHESIVE TAPE FOR TROUGH TRIM	1021434-00-A	2	
*	ADHESIVE PROMOTER, 3M 4298UV	Unrestricted	ADHESIVE PROMOTER, 3M 4298, 4OZ PACKET	1061458-00-A	0.030 ml	
23	STOP, LIFTGATE	Unrestricted	LIFTGATE STOP	1013804-00-D	2	
24	SCR,M4.8x19,SFHC,TRX,STL,ZnAl,ST	Unrestricted	BOLT, TORX, M4.8X24 STEEL ZINC ALUMINUM	1011958-00-C	2	
25	U-NUT,M4.8x1.59,13 wide, 14.8 length	Unrestricted	U-NUT, M4.8x1.59, 13MM WIDE X 14.8MM LONG	1016075-00-A	2	Order in quantities of 25; minimum order: 25.
*	MAGNET, NEODYMIUM N45 BLOCK NB073-N45	Unrestricted	NEODYMIUM MAGNET FOR PARCEL SHELF	1015690-00-A	2	

Liftgate Interior Trim

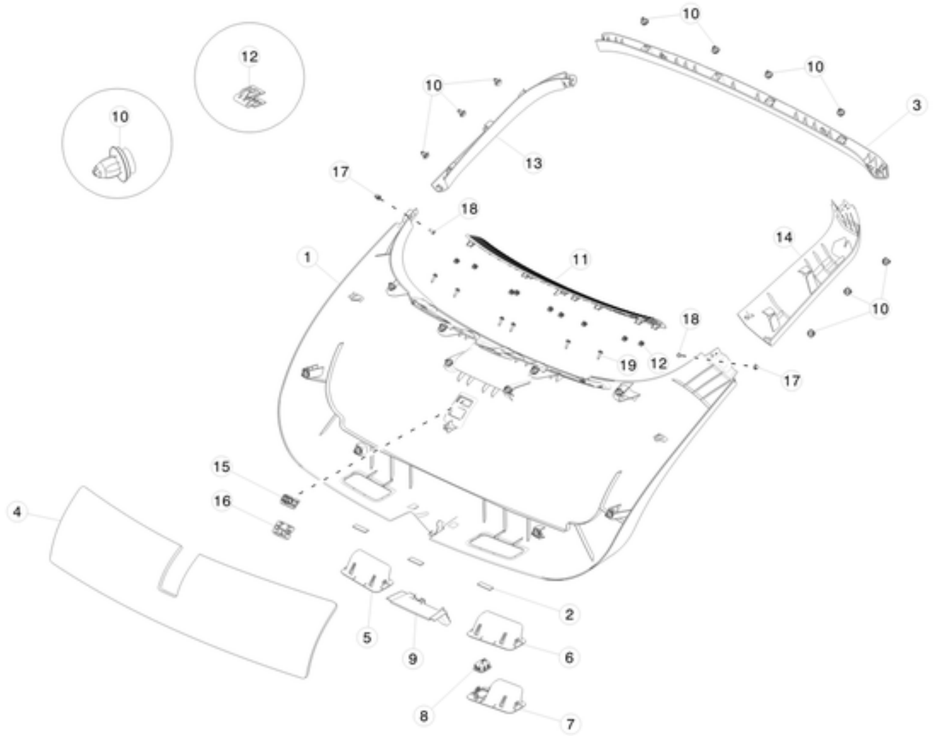

No	Part Name	Category	Part Description	Part Number	Qty	Comments
1	ASY, LIFTGATE TRIM, LOWER	Unrestricted	LIFTGATE LOWER TRIM ASSEMBLY	1009231-S0-A	1	Service only part number. Ok to use 1009231-00-I
2	FOAM TAPE, 25x12.5	Unrestricted	FOAM TAPE, 25MM X 12.5MM	1019302-00-A	3	Use to install item #1
3	ASY, TRIM PANEL, UPPER	Unrestricted	LIFTGATE UPPER TRIM ASSEMBLY	1009236-00-H	1	
4	PAD, ACOUSTIC, LIFTGATE TRIM, LOWER	Unrestricted	LIFTGATE LOWER TRIM ACOUSTIC PAD	1009238-00-B	1	
5	PULL, CUP, LH, LIFTGATE	Unrestricted	LIFTGATE PULL CUP - LEFT	1009262-00-E	1	
6	PULL, CUP, RH, LIFTGATE - STD	Unrestricted	LIFTGATE PULL CUP FOR NON-POWER LIFTGATE - RIGHT	1009263-00-E	1	W/O Switch Hole.
7	PULL, CUP, RH, LIFTGATE - POWER	Unrestricted	LIFTGATE PULL CUP FOR POWER LIFTGATE - RIGHT	1009264-00-E	1	W/ Switch Hole.
8	SWITCH, LIFTGATE, SHUTFACE	Unrestricted	SWITCH FOR POWER LIFTGATE	1010327-00-A	1	
9	COVER, LOWER LATCH	Unrestricted	COVER, LOWER LATCH	NA	1	Only available with item #1
10	Trim Stud	Unrestricted	NIFCO TRIM CLIP 12733	1011813-00-A	20	Order in quantities of 100; minimum order: 100.
11	ASY, LIFTGATE SPEAKER TRIM, MESH GRILLE WITH CLOTH	Unrestricted	LIFTGATE SPEAKER GRILL WITH CLOTH ASSEMBLY	1009233-00-H	1	
11	ASY, LIFTGATE SPEAKER TRIM, MESH GRILLE WITHOUT CLOTH	Unrestricted	LIFTGATE SPEAKER GRILL WITHOUT CLOTH ASSEMBLY	1009233-01-G	1	If not available please order 1008245-00-A and 1009251-00-C.
12	Clip - Retainer - U-BELL	Unrestricted	U-BELL CLIP, 5.8 X 1.5-3.5	1008245-00-A	9	
13	ASY, PANEL, SIDE TRIM, LH	Unrestricted	LIFTGATE SIDE PANEL TRIM ASSEMBLY - LEFT	1009234-00-I	1	
14	ASY, PANEL, SIDE TRIM, RH	Unrestricted	LIFTGATE SIDE PANEL TRIM ASSEMBLY - RIGHT	1009235-00-I	1	
15	puddle lamp	Unrestricted	PUDDLE LAMP	1007151-00-D	1	

16	DOOR, EMERGENCY RELEASE LATCH	Unrestricted	EMERGENCY DOOR RELEASE LATCH	1011955-00-D	1	
17	GROM, SCR, M5 SELF TAP,0.8-2.5, 7MM SQ	Unrestricted	GROMMET, SCREW, M5 SELF-TAPPING	1003209-00-A	4	Order in quantities of 100; minimum order: 100.
18	SCR, M5x12,PT,TORX,ST,ZnAl	Unrestricted	SCREW, TORX, M5x12 ZINC ALUMINUM	1008703-00-A	2	
19	BLT,TPG,TRX,BTN,ST4.2x1.4-20[SS]-S-01	Unrestricted	BOLT, TORX, BUTTON HEAD, M4.2x1.4	1014049-00-B	6	

Parcel Shelf

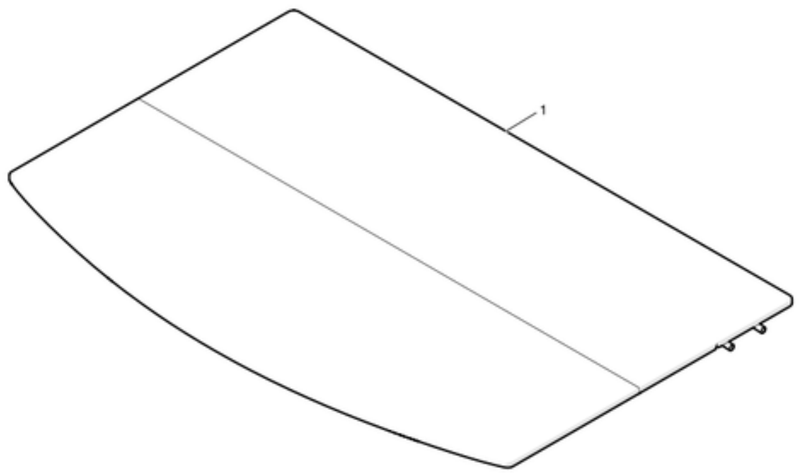

No	Part Name	Category	Part Description	Part Number	Qty	Comments
1	PARCEL SHELF	Unrestricted	PARCEL SHELF	1008958-00-F	1	OK to use D and newer

LUGGAGE COMPARTMENT TRIM

Front Luggage Storage Compartment

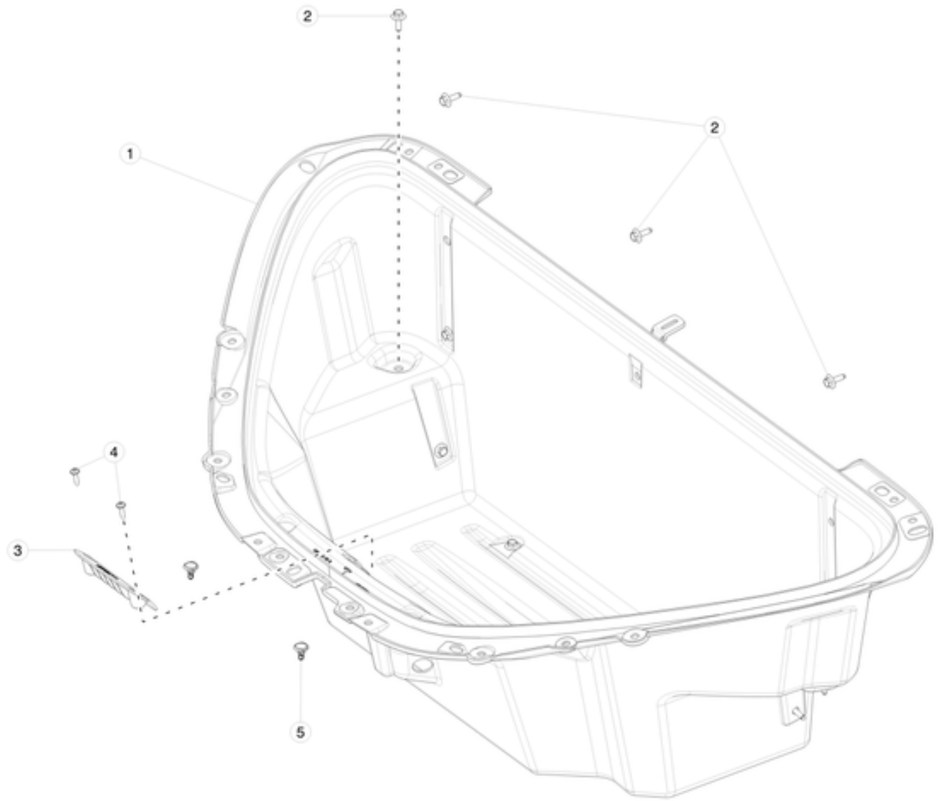

No	Part Name	Category	Part Description	Part Number	Qty	Comments
1	Frunk Molding MS2	Unrestricted	Frunk Molding MS2	1060453-00-D	1	
2	BLT HF M6x1.00x18 [8.8]-D-ZnAl-W	Unrestricted	BLT HF M6x1.00x18 [8.8]-D-ZnAl-W	1006529-00-A	12	
3	Frunk Close Off Plate MS2	Unrestricted	Frunk Close Off Plate MS2	1063054-00-B	1	
4	SCR ST WSHR M5 X 20 ZnNi	Unrestricted	SCR ST WSHR M5 X 20 ZnNi	1012809-00-A	2	
5	RVT PUSH-PULL 8X18X20.0	Unrestricted	RVT PUSH-PULL 8X18X20.0	1006521-00-A	2	

Front Luggage Storage Compartment Carpet Lining

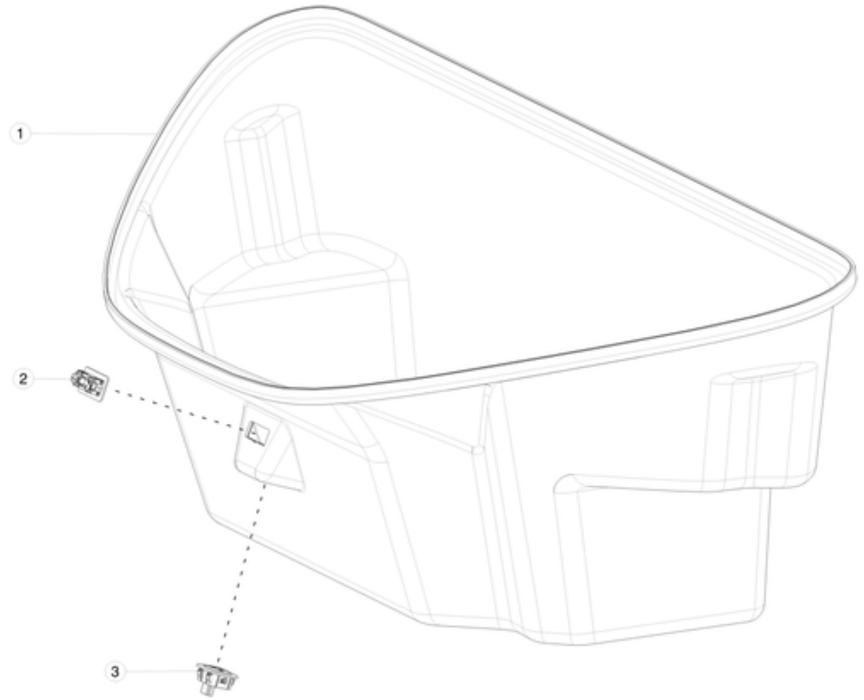

No	Part Name	Category	Part Description	Part Number	Qty	Comments
1	MS FRUNK CARPET REFRESH	Unrestricted	MS FRUNK CARPET REFRESH	1059649-00-C	1	
2	LAMP, PUDDLE	Unrestricted	LAMP, PUDDLE	1007151-00-D	1	
3	SWITCH, FRT TRUNK, CHILD SAFETY	Unrestricted	SWITCH, FRT TRUNK, CHILD SAFETY	1002066-00-A	1	

LABELS

Labels

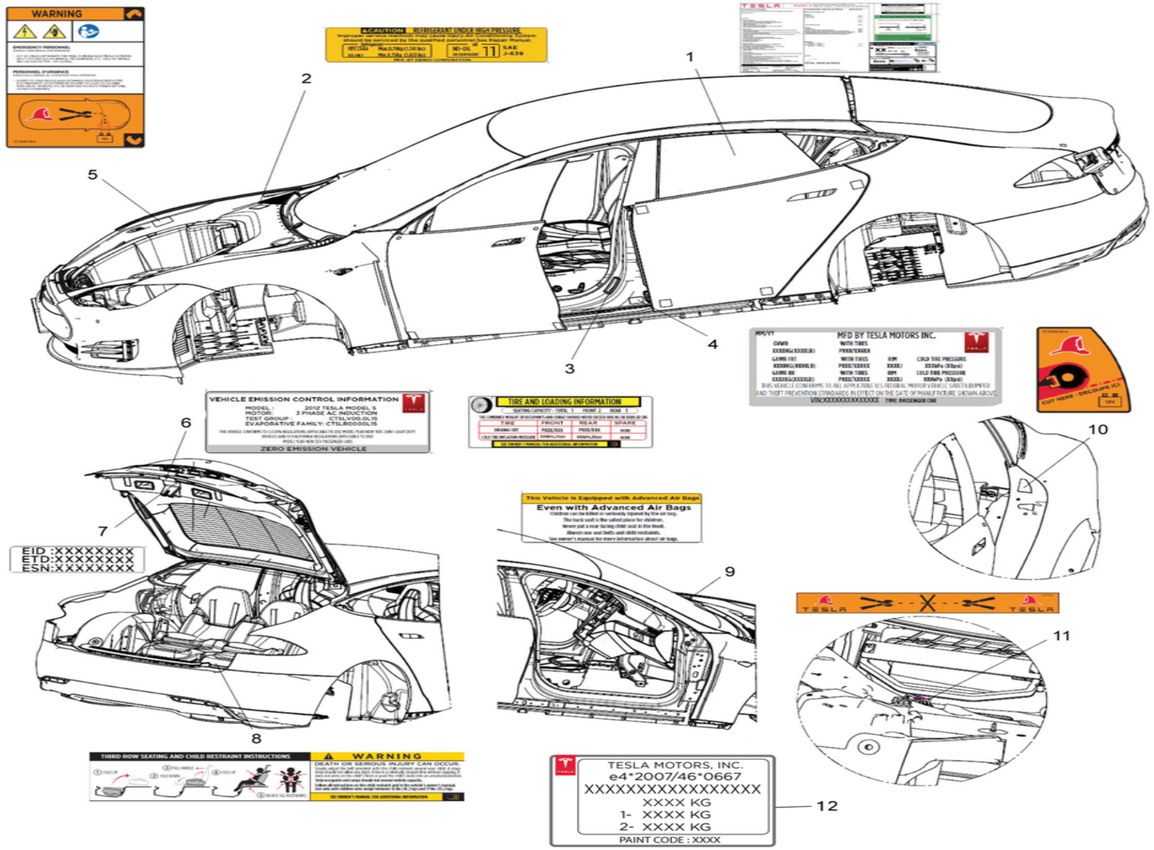

No	Part Name	Category	Part Description	Part Number	Qty	Comments
1	LBL,MONRONEY LABEL 4 VARIANTS	Unrestricted	MONRONEY LABEL	1013946-00-A	1	
1	LBL CANADIAN MONRONEY,ENGLISH AND FRENCH	Unrestricted	CANADIAN MONRONEY LABEL - ENGLISH AND FRENCH	1020832-00-A	1	
*	ADHESIVE TAPE FOR MONRONEY LABEL AND ALTERNATIVE FUEL BUYERS GUIDE LABEL	Unrestricted	ADHESIVE TAPE FOR MONRONEY LABEL AND ALTERNATIVE FUEL BUYERS GUIDE LABEL	1029146-00-A	4	
2	LABEL, REFRIGERANT CHARGE - R134a	Unrestricted	REFRIGERANT CHARGE LABEL - R134A	1013845-00-C	1	
3	TIRE AND LOADING INFORMATION (ENGLISH AND FRENCH)	Unrestricted	TIRE AND LOADING INFORMATION LABEL - ENGLISH AND FRENCH	1013935-00-C	1	Specify tire size when ordering.
3	LBL,Supplemental for Op.Tires package	Unrestricted	OPTIONAL TIRE PACKAGE SUPPLMENTAL LABEL	1025547-00-A	1	Use with Performance Plus tires
4	LABEL,MANUFACTURING CERT	Unrestricted	MANUFACTURINGCERTIFICATION LABEL	1013839-00-D	1	For USA
4	MANUFACTURING CERT LBL DUAL (ENGLISH AND FRENCH)	Unrestricted	MANUFACTURINGCERTIFICATION LABEL - ENGLISH AND FRENCH	1020226-00-B	1	For Canada
5	LABEL,FRONT INFO,FIRST RESPONDER	Unrestricted	FRONT FIRST RESPONDER LABEL	1015586-00-B	1	
6	LBL,VEHICLE EMISSION CONTROL INFORMATION_ENGLISH AND FRENCH	Unrestricted	VEHICLE EMISSION CONTROL INFORMATION LABEL 2016 - ENGLISH AND FRENCH	1020312-00-E	1	For 2016 RWD vehicles
6	LBL,VEHICLE EMISSION CONTROL INFORMATION_ENGLISH AND FRENCH	Unrestricted	VEHICLE EMISSION CONTROL INFORMATION LABEL 2016 - ENGLISH AND FRENCH	1020312-00-G	1	For 201 RWD vehicles
6	LBL, VEHICLE FOR DUAL MOTOR-MY 2016	Unrestricted	VEHICLE EMISSION CONTROL INFORMATION LABEL 2016 - DUAL MOTOR - ENGLISH AND FRENCH	1047907-00-C	1	For 2016 Dual Motor vehicles

8	LABEL,3RD ROW SEAT	Unrestricted	3RDROWSEAT LABEL	1014230-00-B	1	
9	AIRBAG WARNING LABEL	Unrestricted	AIRBAG WARNING LABEL	1013945-00-B	1	
10	LABEL,SIDE INFO,FIRST RESPONDER	Unrestricted	FIRST RESPONDER INFORMATION LABEL - SIDE	1015589-00-B	1	
11	LABEL,CUT TAPE,FIRST RESPONDER	Unrestricted	FIRST RESPONDER - CUT TAPE - LABEL	1015585-00-A	1	
*	LBL, ALTERNATIVE FUEL BUYERS GUIDE	Unrestricted	ALTERNATIVE FUEL BUYERS GUIDE - LABEL	1016577-00-A	1	
*	ADHESIVE TAPE FOR MONRONEY LABEL AND ALTERNATIVE FUEL BUYERS GUIDE LABEL	Unrestricted	ADHESIVE TAPE FOR MONRONEY LABEL AND ALTERNATIVE FUEL BUYERS GUIDE LABEL	1029146-00-A	1	
*	LBL,WARNING BRAKE FLUID DUAL (ENGLISH and FRENCH)	Unrestricted	BRAKE FLUID WARNING LABEL - ENGLISH AND FRENCH	1020229-00-A	1	
*	LBL,ADVANCED AIR BAG WARNING DUAL(ENGLISH and FRENCH) - VISOR	Unrestricted	LABEL, ADVANCED AIR BAG WARNING DUAL (ENGLISH AND FRENCH) - VISOR	NA	2	only available with visor
*	LBL,COMPRESSOR WARNING LBL ON CONNECTOR	Unrestricted	COMPRESSOR CONNECTOR WARNING LABEL	1020299-00-B	1	
*	LBL,STANDARD A4 Size WATERMARKED STOCK	Unrestricted	CERTIFICATE OF COMFORMITY BLANK LABEL	1025629-00-B	1	use for Certificate of Conformity
*	LBL,SNOW TIRE max speed WARNING	Unrestricted	SNOW TIRE MAX SPEED WARNING LABEL	1024923-00-A	1	
*	LABEL, TEMP REGISTRATION PLACE HOLDER	Unrestricted	TEMPORARY REGISTRATION PLACE HOLDER LABEL	1036138-00-A	1	For use on front windshield
*	3RD ROW SEAT VENT LABEL INSTRUCTIONS	Unrestricted	3RD ROW SEAT VENT INSTRUCTIONS LABEL	1030041-00-A	1	

Labels - HV Battery

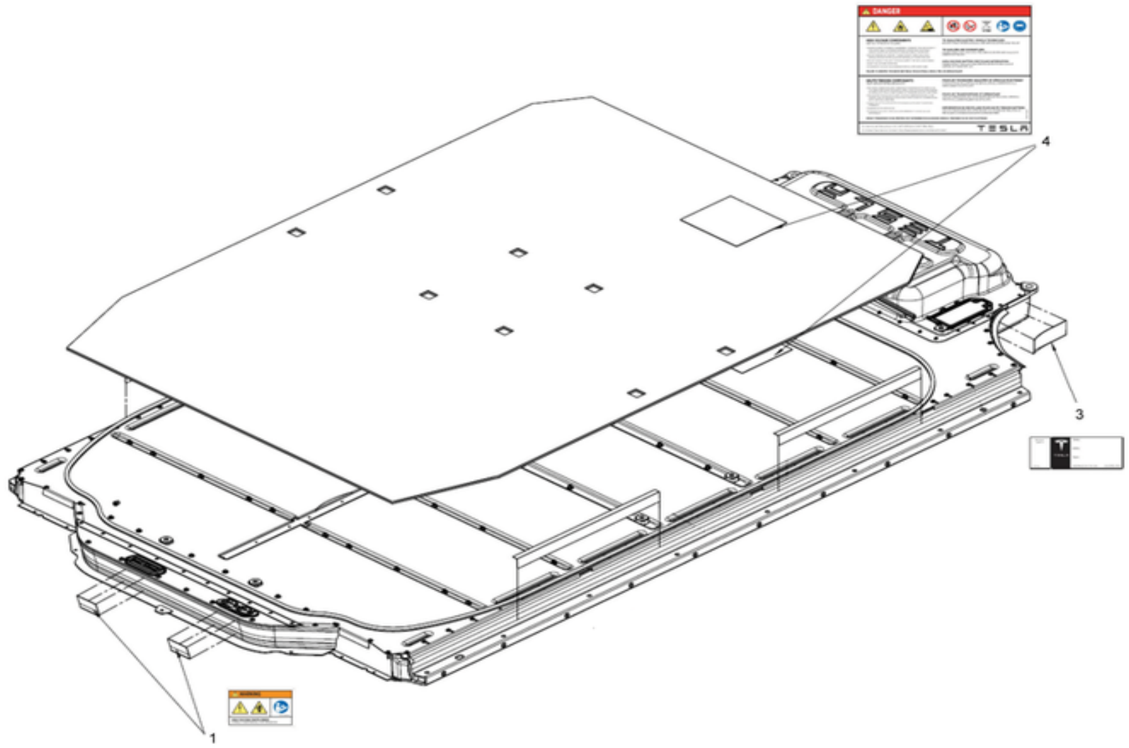

No	Part Name	Category	Part Description	Part Number	Qty	Comments
1	LABEL,HV,AUTHORIZED SERVICE PERSONNEL (ENGLISH and FRENCH)	Unrestricted	HIGH VOLTAGE AUTHORIZED SERVICE PERSONNEL LABEL	1020227-00-D	2	
3	LBL,HVBATT ID,AS PRINTED,S3,MDLS	Unrestricted	HIGH VOLTAGE BATTERY IDENTIFICATION LABEL - S3	1028322-00-A	1	
3	LBL,HVBATT ID,AS PRINTED,S2,MDLS	Unrestricted	HIGH VOLTAGE BATTERY IDENTIFICATION LABEL - S2	1028322-01-A	1	
4	LABEL,RECYCLING WARNING,BATTERY	Unrestricted	BATTERY RECYCLING WARNING LABEL	1015713-00-B	2	

OWNER INFORMATION

In-Car Information

No	Part Name	Category	Part Description	Part Number	Qty	Comments
1	MODEL S AND X ROADSIDE ASSISTANCE GUIDE	Unrestricted	MODEL S AND X ROADSIDE ASSISTANCE GUIDE	1128690-00-B	1	1128690-00-A and 1128690-00-B are fully interchangeable
2	NORTH AMERICA MODEL S SAFETY INFORMATION	Unrestricted	NORTH AMERICA MODEL S SAFETY INFORMATION	1128692-00-B	1	1128692-00-A and 1128692-00-B are fully interchangeable
*	CLOTH, MICROFIBER, LOGO	Unrestricted	TESLA MICROFIBER CLOTH	1016981-00-B	1	
3	TOUCH-UP PAINT, PEN, WHITE, MDLS, SW	Unrestricted	TOUCH-UP PAINT - PEN - WHITE	9000001-CW-A	1	
4	TOUCH-UP PAINT, PEN, BLACK, MDLS, SW	Unrestricted	TOUCH-UP PAINT - PEN - BLACK	9000001-SB-A	1	
7	TOUCH-UP PAINT, PEN, SUNSET RED, MDLS, SW	Unrestricted	TOUCH-UP PAINT - PEN - SUNSET RED	9000001-MR-A	1	
9	TOUCH-UP PAINT, PEN, SILVER, MDLS, SW	Unrestricted	TOUCH-UP PAINT - PEN - SILVER	9000001-SS-A	1	
12	TOUCH-UP PAINT, PEN, WHITE PEARL, MDLS, SW	Unrestricted	TOUCH-UP PAINT - PEN - WHITE PEARL	9000001-SW-A	1	
13	TOUCH-UP PAINT, PEN, SILVER WHEEL,SW	Unrestricted	TOUCH-UP PAINT - PEN - SILVER WHEEL	9000001-W1-A	1	
14	TOUCH-UP PAINT, PEN, GREY WHEEL,SW	Unrestricted	TOUCH-UP PAINT - PEN - BLACK WHEEL	9000001-W2-A	1	

GEARBOX AND HALFSHAFTS

Halfshafts

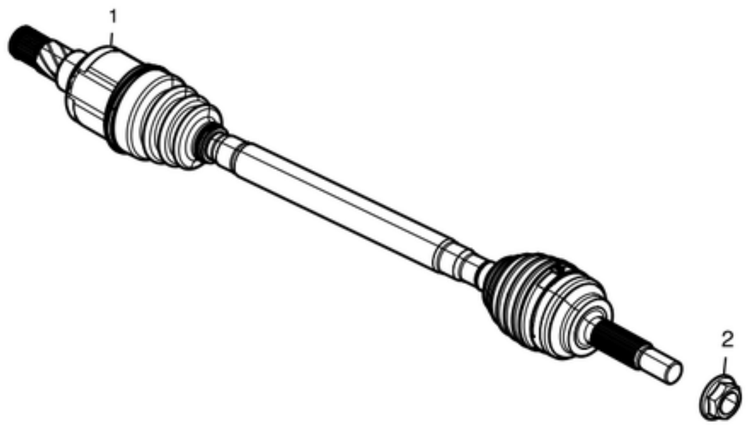

No	Part Name	Category	Part Description	Part Number	Qty	Comments
1	REAR HALFSHAFT 36 MM, PERFORMANCE	Unrestricted	PERFORMANCE REAR HALFSHAFT - 36 MM	1007719-01-B	2	
2	NUT HF M24x1.5 [8.8] ZnFl-W	Unrestricted	NUT, HEX FLANGE M24x1.5	1020297-00-A	2	
*	WASHER ASSY LCK M24x39 ZnFl-W	Unrestricted	LOCK WASHER ASSEMBLY M24x39	1020296-00-B	2	Use to install item #2.
3	MOLYKOTE M-77 PASTE - 8 OZ CAN	Unrestricted	MOLYKOTE M-77 PASTE - 8 OZ CAN	1042645-00-A	**	2 grams - use on spline to hub

Rear Drive Unit Assembly

Motor - Large Rear Drive Unit

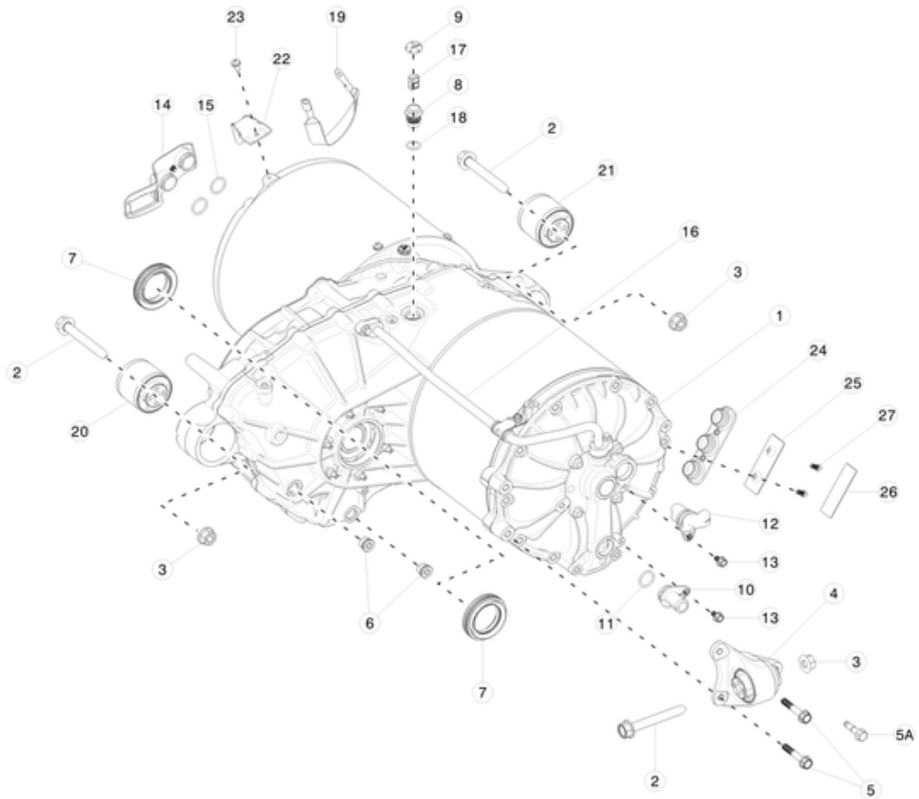

No	Part Name	Category	Part Description	Part Number	Qty	Comments
1	ASY,P-TRAIN,MECH,COMPLETE,RC	Unrestricted	DRIVE UNIT - BASE - ALL REGIONS	1002633-00-Q	1	
1	ASY,P-TRAIN,RMN,MDLS,BASE,CMC,HS,FA2+	Unrestricted	DRIVE UNIT - BASE - REMAN	1025276-00-Q	1	REMAN part number for 1002633-00-Q.
1	ASY,P-TRAIN,SPORT,MECH,COMPLETE	Unrestricted	DRIVE UNIT - SPORT - ALL REGIONS	1002633-01-R	1	
1	ASY,P-TRAIN,RMN,MDLS,SPORT,CMC,HS	Unrestricted	DRIVE UNIT - SPORT - REMAN	1025598-00-P	1	REMAN part number for 1002633-01-R. Reman PN 1056681-00-P can also be used.
2	BOLT HF M12x1.75x90 [10.9]-U-G720	Unrestricted	BOLT, M12x1.75x90MM	2007064	3	
3	NUT HF M12x1.75 [10]-G720	Unrestricted	NUT, M12x1.75MM	2007076	3	
4	ASY - SIDE MOTOR MOUNT	Unrestricted	SIDE MOTOR MOUNT ASSEMBLY	1028034-00-B	1	
4	SIDE MOTOR MT ASSY	Unrestricted	SIDE MOTOR MOUNT ASSEMBLY - DUAL MOTOR	1027591-00-D	1	For Dual Motor.
5	BOLT,M8-1.25x50,DIN6921,10.9,MTPT,ZF,PAT	Unrestricted	BOLT, M8-1.25x50MM, MATPOINT	1008724-00-B	2	for RWD
5	BOLT,M8-1.25x50,DIN6921,10.9,MTPT,ZF,PAT	Unrestricted	BOLT, M8-1.25x50MM, MATPOINT	1008724-00-B	3	for Dual Motor
5A	BOLT,M8-1.25x30,DIN6921,G10.9,MTPT,ZF720	Unrestricted	BOLT, M8-1.25x30MM, MATPOINT	1008722-00-A	1	For RWD. Order in quantities of 25; minimum order: 25.
6	Motor Drain/Refill plug	Unrestricted	DRAIN FILL PLUG	1008575-00-A	2	
7	Oil Seal	Unrestricted	OUTPUT SEAL	1007382-00-A	2	Order in quantities of 10; minimum order: 10.
8	BODY,FITTING,BREATHER,TRANS,JW-C2	Unrestricted	TRANSMISSION BREATHER FITTING BODY	1007387-00-A	1	

9	CAP,FITTING,BREATHER,TRANS,JW-C2	Unrestricted	TRANSMISSION BREATHER FITTING CAP	1007390-00-A	1	
10	ASY,FITTING,MANIFOLD,INLET,JW-C2	Unrestricted	INLET MANIFOLD FITTING ASSEMBLY	1009997-00-B	1	Order in quantities of 5; minimum order: 5.
11	INLET MANIFOLD FITTING O-RING	Unrestricted	INLET MANIFOLD FITTING O-RING	1008806-00-A	1	Use with 1009997-00-B. Order in quantities of 10; minimum order: 10.
12	ENCODER,SENSOR,WR	Unrestricted	SENSOR ENCODER	1002722-00-C	1	
13	BOLT,M6-1.0X12,FHCS,DIN6921,G10.9,ZF720	Unrestricted	BOLT, M6-1.0X12, FLANGED HEAD CAP SCREW	1008770-00-A	2	Use to install item #11 and 12. Order in quantities of 100; minimum order: 100.
14	ASY,HV COVER,INVERTER	Unrestricted	HIGH VOLTAGE INVERTER COVER ASSEMBLY	1003783-00-B	1	
15	O-RING,HV COVER,ENCLOSURE,INVERTER	Unrestricted	HIGH VOLTAGE INVERTER ENCLOSURE COVER O-RING	1003784-00-A	2	Use on item #14
*	LUBRICANT,SILICONE,100000CST	Unrestricted	SILICONE LUBRICANT	1010251-00-A	**	Use on item #14
16	ASY,PIPE,ROTOR,OUTLET,JW-C2	Unrestricted	ROTOR PIPE OUTLET ASSEMBLY	1002731-00-A	1	
17	BAFFLE,INSERT,BREATHER,TRANS,JW-C2	Unrestricted	TRANSMISSION BREATHER INSERT BAFFLE	1007399-00-A	1	
18	ORING,AS568A-908 - BREATHER	Unrestricted	BREATHER O-RING	1008266-00-A	1	
19	ASY,HARN,GND STRP,DRV INV TO CHASSIS	Unrestricted	GROUND STRAP HARNESS ASSEMBLY - DRIVE INVERTER TO CHASSIS	1009683-00-C	1	
20	FRONT TRANSMISSION MT BUSHING	Unrestricted	FRONT TRANSMISSION MOUNTNG BUSHING	6008779-00-D	1	
21	REAR TRANSMISSION MT BUSHING	Unrestricted	REAR TRANSMISSION MOUNTNG BUSHING	6008780-00-D	1	
*	SK LUBRICANT 212-B - ATF, QUART	Unrestricted	SK LUBRICANT 212-B - ATF, QUART	1031106-00-A	1.4L	full synthetic - for rear large drive unit - Not Illustrated
*	SK LUBRICANT 212-B - ATF, DRUM	Unrestricted	SK LUBRICANT 212-B - ATF, DRUM	1061469-00-A	1.4L	full synthetic - for rear large drive unit - Not Illustrated
22	BRKT, HV CBL TO DRV INV, 2MM THK, STL	Unrestricted	HIGH VOLTAGE CABLE TO DRIVE INVERTER BRACKET - 2MM STEEL	1019545-00-A	1	high voltage cable bracket to eliminate contact with acoustic pad
23	SCR,M6-1.0X12,PH,TORX,STL,SEMS,PATCH	Unrestricted	SCREW, M6-1.0X12, PANHEAD, TORX, STEEL, WITH PATCH	1011427-00-B	1	Use with 1019545-00-A. Order in quantities of 50; minimum order: 50.
24	DRIVE UNIT PHASE OUT HIGH VOLTAGE COVER	Unrestricted	DRIVE UNIT PHASE OUT HIGH VOLTAGE COVER	1005609-00-A	1	AC cover
25	REAR DRIVE INVERTER PHASE OUT SAFETY LABEL FLANGE	Unrestricted	DRIVE UNIT PHASE OUT HIGH VOLTAGE FLANGE	1028361-00-B	1	use with 1005609-00-A
26	HIGH VOLTAGE WARNING LABEL FOR PHASE OUT COVER	Unrestricted	HIGH VOLTAGE WARNING LABEL FOR PHASE OUT COVER	6008307	1	use with 1005609-00-A. Order in quantities of 5; minimum order: 5.
27	SCREW, M4 X 0.7 X 14mm	Unrestricted	SCREW, M4 X 0.7 X 14mm	1011423-00-C	2	use with 1005609-00-A
*	NUT, M6-1.0, SEALING	Unrestricted	NUT, M6-1.0, SEALING	1007714-00-A	6	
*	DIFFERENTIAL SPACER SHIM - THICKNESS = 0.20mm	Unrestricted	DIFFERENTIAL SPACER SHIM - THICKNESS = 0.20mm	1052446-01-A	2	Order in quantities of 10; minimum order: 10.
*	DIFFERENTIAL SPACER SHIM - THICKNESS = 0.30mm	Unrestricted	DIFFERENTIAL SPACER SHIM - THICKNESS = 0.30mm	1052446-02-A	2	Order in quantities of 10; minimum order: 10.
*	DIFFERENTIAL SPACER SHIM - THICKNESS = 0.41mm	Unrestricted	DIFFERENTIAL SPACER SHIM - THICKNESS = 0.41mm	1052446-03-A	2	
*	DIFFERENTIAL SPACER SHIM - THICKNESS = 0.50mm	Unrestricted	DIFFERENTIAL SPACER SHIM - THICKNESS = 0.50mm	1052446-04-A	2	Order in quantities of 25; minimum order: 25.
*	DIFFERENTIAL SPACER SHIM - THICKNESS = 0.61mm	Unrestricted	DIFFERENTIAL SPACER SHIM - THICKNESS = 0.61mm	1052446-05-A	2	
*	DIFFERENTIAL SPACER SHIM - THICKNESS = 0.70mm	Unrestricted	DIFFERENTIAL SPACER SHIM - THICKNESS = 0.70mm	1052446-06-A	2	
*	O-RING, AS568-120,VITON	Unrestricted	O-RING, AS568-120,VITON	1053158-00-A	1	
*	BOLT, M6-1.0X12, FLANGED HEAD CAP SCREW	Unrestricted	BOLT, M6-1.0X12, FLANGED HEAD CAP SCREW	1008770-00-A	1	Part of 1053641-00-A. Order in quantities of 100; minimum order: 100.
*	BOLT, M6-1.0X16MM, FLANGED HEAD CAP SCREW STAINLESS	Unrestricted	BOLT, M6-1.0X16MM, FLANGED HEAD CAP SCREW STAINLESS	1002784-00-A	4	part of 1053641-00-A
*	BOLT, M8-1.25 X 30MM, FLANGED HEAD CAP SCREW	Unrestricted	BOLT, M8-1.25 X 30MM, FLANGED HEAD CAP SCREW	1002783-00-A	10	part of 1053641-00-A
*	BOLT,M6-1.0x50,DIN7500,TYPE D,ZF720	Unrestricted	BOLT,M6-1.0X50MM, FLANGED HEAD CAP SCREW	1008177-00-A	2	part of 1053641-00-A
*	MOLDED O-RING - MANIFOLD TO END BELL	Unrestricted	MOLDED O-RING - MANIFOLD TO END BELL	1011392-00-B	1	part of 1053641-00-A
*	MOLDED O-RING - ENDBELL TO MOTOR	Unrestricted	MOLDED O-RING - ENDBELL TO MOTOR	1011393-00-B	1	part of 1053641-00-A
*	SHIPPING CAP	Unrestricted	SHIPPING CAP	2006811	2	part of 1053641-00-A
*	BLACK VINYL CAP - 0.677IN OUTER DIAMETER	Unrestricted		2006327	1	part of 1053641-00-A
*	BELLEVILLE RING SPACER - 6007	Unrestricted	BELLEVILLE RING SPACER - 6007	1017378-00-A	1	part of 1053641-00-A
*	ROTOR RING GROUNDING BRUSH	Unrestricted	ROTOR RING GROUNDING BRUSH	1002661-00-B	1	part of 1053641-00-A
*	O-RING,AS568A-143	Unrestricted	O-RING,AS568A-143	1007419-00-B	1	part of 1053641-00-A
*	WELDED ROTOR ASSEMBLY - MODEL S	Unrestricted	WELDED ROTOR ASSEMBLY - MODEL S	1024715-01-D	1	

*	WELDED ROTOR ASSEMBLY - MODEL S	Unrestricted	WELDED ROTOR ASSEMBLY - MODEL S	1058273-01-A	1	
*	DEEP GROOVE BALL MOTOR BEARING	Unrestricted	DEEP GROOVE BALL MOTOR BEARING	1002687-00-A	2	
*	ASY,MANIFOLD,COOLING	Unrestricted	COOLING MANIFOLD ASSEMBLY	1006255-10-A	1	
*	ASY,ENDBELL,MIP,HI	Unrestricted	ENDBELL ASSEMBLY	1007975-10-B	1	
*	THREADLOCKER ADHESIVE, MEDIUM STRENGTH, BLUE	Unrestricted	THREADLOCKER ADHESIVE, MEDIUM STRENGTH, BLUE	2001274	**	
*	SEALANT, SILICONE, RTV, LOCTITE 598HB	Unrestricted	SEALANT, SILICONE, RTV, LOCTITE 598HB	1089977-00-A	**	
*	GREASE, SPLINE, COUPLER	Unrestricted	GREASE, SPLINE, COUPLER	2004942	**	
*	LOCTITE 648	Unrestricted		1089938-00-A	**	Replaces 1009605-00-A.
*	MOBIL 1 SYNTHETIC GREASE 13.7oz	Unrestricted	MOBIL 1 SYNTHETIC GREASE	1089958-00-A	**	
*	SILICONE LUBRICANT	Unrestricted	SILICONE LUBRICANT	1010251-00-A	**	
*	30x1.34x8 PT RECESSED SIX LOBE PANHEAD	Unrestricted	SCREW, 30x1.34x8 RECESSED SIX LOBE PANHEAD	1035556-00-A	4	for inverter repair
*	TRIPOLE, MODEL S BASE, TOROIDLESS	Unrestricted	DRIVE INVERTER SPORT - MODEL S BASE	1003389-00-K	1	for inverter repair
*	ELECTRICAL JOINT COMPOUND, A-13	Unrestricted	ELECTRICAL JOINT COMPOUND, A-13	1089974-00-A	1	
*	SUB ASY,PHASES,DRV INV,SPORT	Unrestricted	DRIVE INVERTER SPORT - MODEL S SPORT	1003389-02-M	1	for inverter repair
*	ASY, INPUT BUSBAR, NO TOROID	Unrestricted	INPUT BUSBAR ASSEMBLY - WITHOUT TOROID	1014364-00-B	1	for inverter repair
*	ASY, PADDLE BOARD, INV, MODEL S	Unrestricted	INVERTER PADDLE BOARD ASSEMBLY - MODEL S	1054769-00-A	1	for inverter repair
*	GAP PAD,PHASE OUT,PHASE A/B,INVERTER	Unrestricted	GAP PAD,PHASE OUT,PHASE A/B,INVERTER	1003792-00-A	1	for inverter repair

Motor - Small Rear Drive Unit

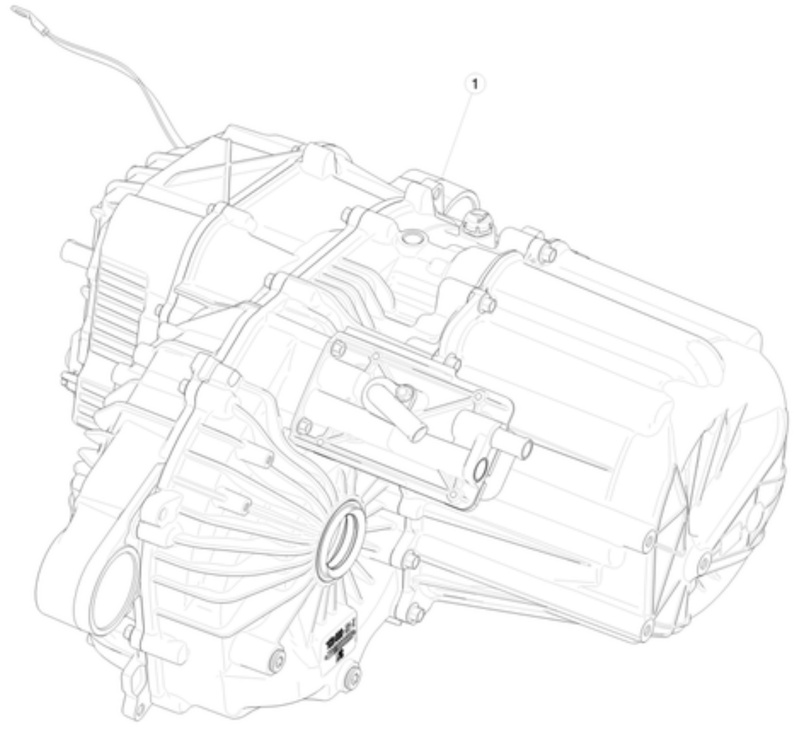

No	Part Name	Category	Part Description	Part Number	Qty	Comments
1	ASY,DRIVE,UNIT,COMPLETE, 3.0-150,REAR	Unrestricted	DRIVE UNIT - REAR - DUAL MOTOR	1037000-00-F	1	For Dual Motor - rear small drive unit.
*	SK LUBRICANT 212-B - ATF, QUART	Unrestricted	AUTOMATIC TRANSMISSION FLUID - SK LUBRICANT 212-B - QUART	1031106-00-A	2.25L	Full synthetic - for rear small drive unit. Not Illustrated
*	SK LUBRICANT 212-B - ATF, DRUM	Unrestricted	AUTOMATIC TRANSMISSION FLUID - SK LUBRICANT 212-B - DRUM	1061469-00-A	2.25L	Full synthetic - for rear small drive unit. Not Illustrated
*	BCKT WRP ASSY,CVR,ACSTC,SDU-R	Unrestricted	ACOUSTIC COVER BUCKET WRAP - SMALL REAR DRIVE UNIT	1056867-00-A	1	For Dual Motor - rear small drive unit.
*	ASY,FITTING,COOLER,0.625,3.0-150R	Unrestricted	COOLER FITTING ASSEMBLY - REAR SMALL DRIVE UNIT	1037180-00-B	1	Use with Dual Motor rear small drive unit. Contains 1037190-00-B and 1037192-00-A.
*	FITTING,COOLER,0.625,3.0-150R	Unrestricted	COOLER FITTING - REAR SMALL DRIVE UNIT	1037190-00-B	1	Contained in 1037180-00-B
*	ORING,AS568A-115,HNBR	Unrestricted	O-RING - COOLER FITTING ASSEMBLY - REAR SMALL DRIVE UNIT	1037192-00-A	1	Contained in 1037180-00-B
*	ASY, HARN, GND STRP, SDU TO BODY REAR	Unrestricted	HARNESS ASSEMBLY - SMALL REAR DRIVE UNIT TO BODY GROUND STRAP	1047494-00-A	1	
*	SEAL,OUTPUT,JW2	Unrestricted	SMALL DRIVE UNIT OUTPUT SEALS	1007382-00-A	1	Order in quantities of 10; minimum order: 10.
*	1038350-00-A	Unrestricted	PIP SEAL, COOLER, 3.0-150, REAR	1038350-00-A	2	

PANORAMIC ROOF

Roof Glass

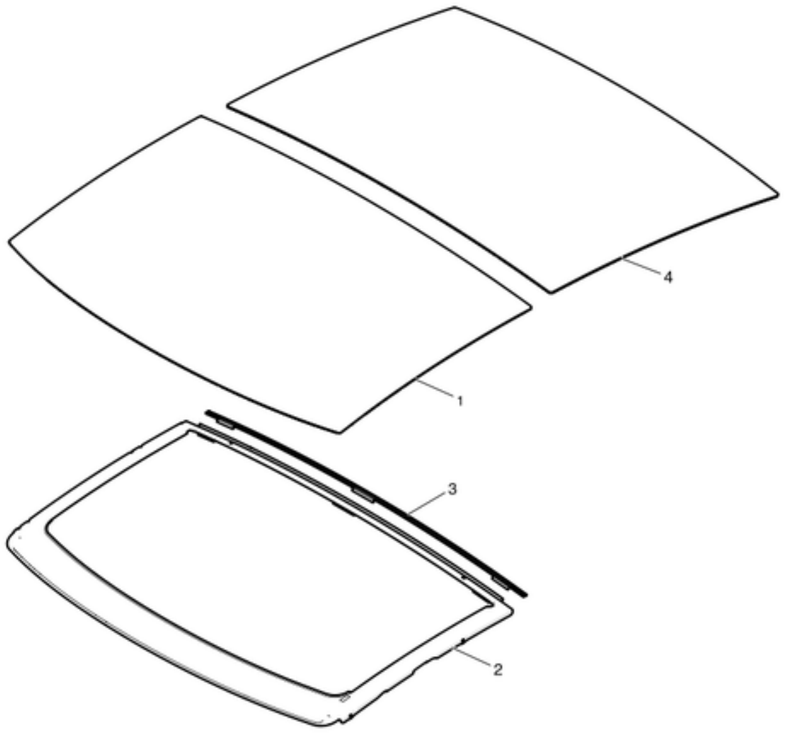

No	Part Name	Category	Part Description	Part Number	Qty	Comments
1	ASY, PANO ROOF MOVING GLASS KIT, SERVICE	Unrestricted	PANORAMIC ROOF 2.1 MOVING GLASS - SERVICE KIT ASSEMBLY	1053620-S0-A	1	For vehicles with option code RFP2
1	MOVABLE GLASS KIT ASSY, SERVICE	Unrestricted	MOVABLE GLASS KIT ASSY, SERVICE	NA	1	Only part of kit 1026856-S0-A. Not available separately.
*	FIXED GLASS ROOF	Unrestricted	ALL GLASS ROOF,FIXED	1032766-00-E	1	For vehicles with option code RFFG (manufactured on or after November 7, 2016). Use with urethane: 1048645-00-A (2 tubes) and betaseal primer (1059658-00-A).
*	ASY B PILLAR HEADLINER BRKT RH	Unrestricted	ASY B PILLAR HEADLINER BRKT RH	1085036-00-E	1	For vehicles with option code RFFG (manufactured on or after November 7, 2016).
*	ASY B PILLAR HEADLINER BRKT LH	Unrestricted	ASY B PILLAR HEADLINER BRKT LH	1085037-00-E	1	For vehicles with option code RFFG (manufactured on or after November 7, 2016).
*	COVER, GLASS FRAME FRONT TAB	Unrestricted	GLASS FRAME FRONT TAB COVER	1036769-00-C	1	
4	ASY, PANO ROOF FIXED GLASS KIT, SERVICE	Unrestricted	PANORAMIC ROOF 2.1 FIXED REAR GLASS - SERVICE KIT ASSEMBLY	1053621-S0-A	1	
*	DATUM PIN FRONT, PANO ROOF FIXED GLASS	Unrestricted	PANO ROOF FIXED GLASS DATUM PIN FRONT	1043442-00-A	1	
5	Dow BetaSeal Express - 310ML CARTRIDGE	Unrestricted	DOW BETASEAL EXPRESS - 310ML	1048645-00-A	**	Use 11 ml.
6	5504G PRIMER - 10ML TUBE	Unrestricted	5504G PRIMER - 10ML	1059658-00-A	**	Use 11 ml. Expires 14 days after opening container. Use with 1048645-00-A.

Drive Motor and Cable Mechanism

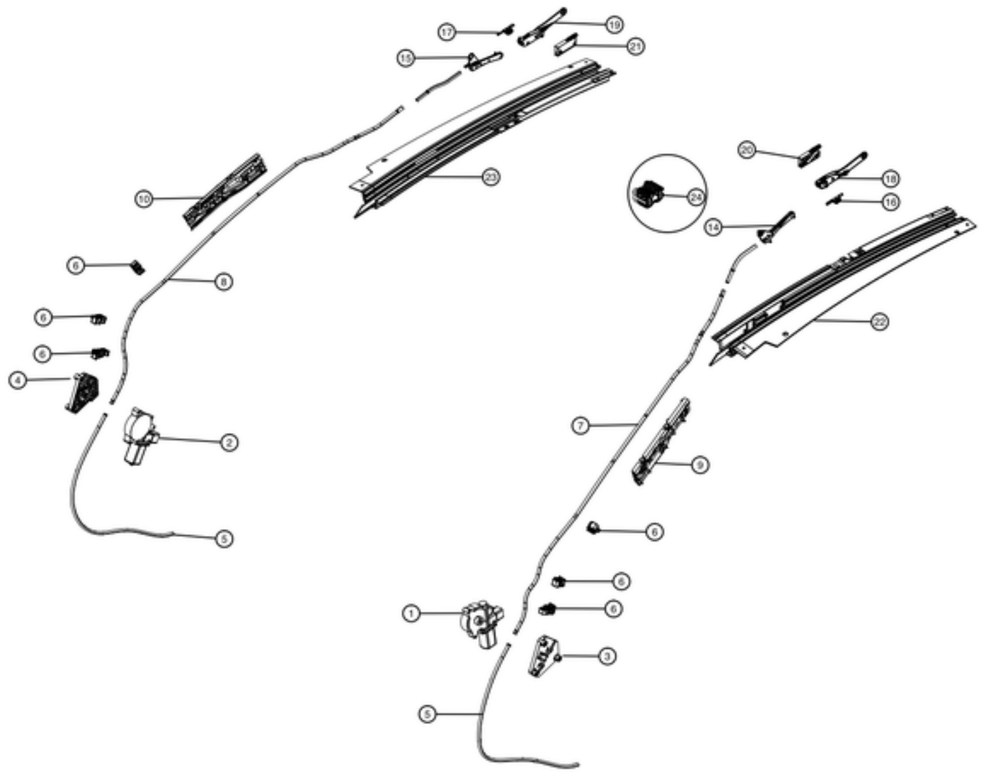

No	Part Name	Category	Part Description	Part Number	Qty	Comments
1	MOTOR - ROOF LH	Unrestricted	PANORAMIC ROOF MOTOR - LEFT	6008620	1	
2	MOTOR - ROOF RH	Unrestricted	PANORAMIC ROOF MOTOR - RIGHT	1006361-00-A	1	
3	MOTOR BLOCK LH	Unrestricted	MOTOR BLOCK - LEFT	1003242-00-A	1	
4	MOTOR BLOCK RH	Unrestricted	MOTOR BLOCK - RIGHT	6008697-00-A	1	
5	RETURN TUBE	Unrestricted	RETURN TUBE	6008694	2	
6	A-PILLAR CLIPS	Unrestricted	A-PILLAR CLIPS	1006398-00-A	6	
7	Panorama Roof Drive Tube - Left	Unrestricted	PANORAMIC ROOF DRIVE TUBE - LEFT	6008691-00-D	1	
8	Panorama Roof Drive Tube - Right	Unrestricted	PANORAMIC ROOF DRIVE TUBE - RIGHT	6008690-00-D	1	
9	BRKT-A PILLAR DRAIN TUBE MTG LH	Unrestricted	A-PILLAR DRAIN TUBE MOUNTING BRACKET - LEFT	1008371-00-E	1	
10	BRKT-A PILLAR DRAIN TUBE MTG RH	Unrestricted	A-PILLAR DRAIN TUBE MOUNTING BRACKET - RIGHT	1008372-00-E	1	
14	MDLS, ASSY, PANO ROOF LINK, FR, LH	Unrestricted	PANORAMIC ROOF LINK ASSEMBLY - FRONT LEFT	1035764-00-D	1	Must also change shoe guide: 1005320-00-D.
15	MDLS, ASSY, PANO ROOF LINK, FR, RH	Unrestricted	PANORAMIC ROOF LINK ASSEMBLY - FRONT RIGHT	1035765-00-D	1	Must also change shoe guide: 1005320-00-D.
18	LINK ASSY - REAR LEFT	Unrestricted	PANORAMIC ROOF LINK ASSEMBLY - REAR LEFT	1033886-00-E	1	
19	LINK ASSY - REAR RIGHT	Unrestricted	PANORAMIC ROOF LINK ASSEMBLY - REAR RIGHT	1034356-00-E	1	
24	GUIDE SHOE ASSY	Unrestricted	GUIDE SHOE ASSEMBLY	1005320-00-D	6	Order in quantities of 50; minimum order: 50.
*	WSHR,FLT,M5x1.2	Unrestricted	WSHR, FLAT, M5x1.2MM	1018366-00-A	6	use to install item # 1, 2, 3, and 4

Fixed Glass Roof Assembly

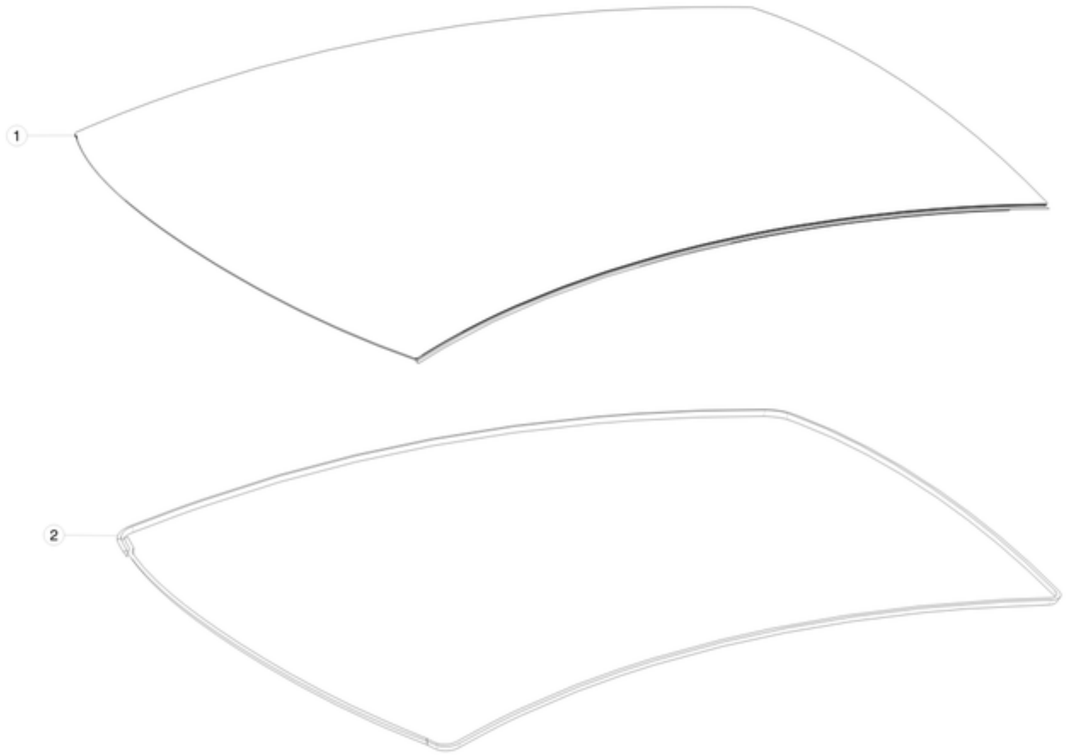

No	Part Name	Category	Part Description	Part Number	Qty	Comments
1	FIXED GLASS ROOF SYSTEM	Unrestricted	FIXED GLASS ROOF SYSTEM	1032766-00-E	1	For vehicles with option code RFFG (manufactured on or after November 7, 2016).
2	Dow BetaSeal Express - 310ML CARTRIDGE	Unrestricted	DOW BETASEAL EXPRESS - 310ML	1048645-00-A	**	
*	5504G PRIMER - 10ML TUBE	Unrestricted	5504G PRIMER - 10ML	1059658-00-A	**	Use 2 tubes. Expires 14 days after opening container. Use with 1048645-00-A.

Panoramic Roof Assembly

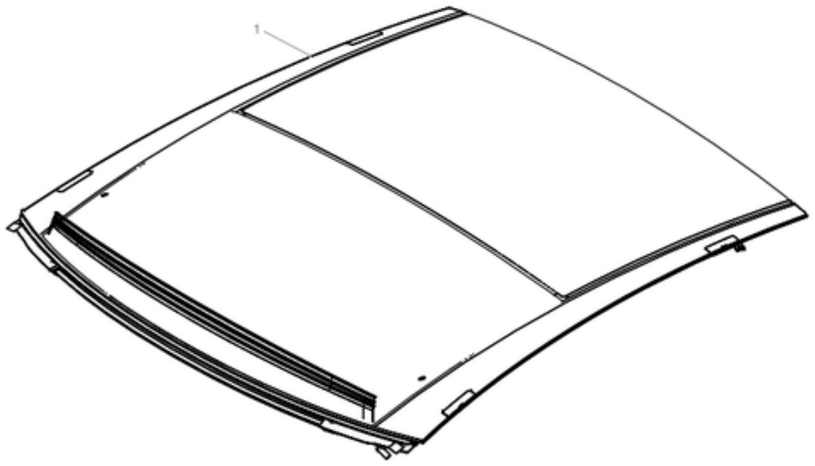

No	Part Name	Category	Part Description	Part Number	Qty	Comments
1	CASSETTE KIT, PANORAMIC ROOF, SERVICE	Unrestricted	PANORAMIC ROOF 2.1 CASSETTE - SERVICE KIT ASSEMBLY	1053628-S0-A	1	
*	Dow BetaSeal Express - 310ML CARTRIDGE	Unrestricted	DOW BETASEAL EXPRESS - 310ML	1048645-00-A	**	use 1931 ml
*	5504G PRIMER - 10ML TUBE	Unrestricted	5504G PRIMER - 10ML	1059658-00-A	**	Use 11 ml. Expires 14 days after opening container. Use with 1048645-00-A.
*	NUT RVT HEX FLAT HD M5X0.8 STL	Unrestricted	NUT, RIVET, HEX, FLAT HEAD, M5X0.8 STEEL	1006392-00-A	4	Order in quantities of 50; minimum order: 50.
*	DUAL LOCK 250 15x75	Unrestricted	DUAL LOCK 15MM X 75MM	6008629	6	
*	DUAL LOCK 250 25x35	Unrestricted	DUAL LOCK 25MM X 35MM	1013883-00-A	5	
*	A-PILLAR CLIPS	Unrestricted	A-PILLAR CLIPS	1006398-00-A	2	
*	GREASE - KLUBERSYNTH RA 44-702	Unrestricted	GREASE - KLUBERSYNTH RA 44-702	1031102-00-A	1	Use 8 grams.
*	CLOSED END POP RIVET	Unrestricted	CLOSED END POP RIVET	1006394-00-A	12	
*	TUBE CLAMP,0.250in DIA,0.281in,Vinyl	Unrestricted	TUBE CLAMP, 0.250IN DIAMETER, 0.281IN, VINYL	1012951-00-B	2	
*	SCREW TORX M5 x 12 TRUSS HEAD (T25)	Unrestricted	TRUSS HEAD SCREW M5X12 WITH T25 TORX DRIVE	1011784-00-B	6	
*	ADHESIVE PROMOTER, 3M 4298, 4OZ PACKET	Unrestricted	ADHESIVE PROMOTER, 3M 4298, 4OZ PACKET	1061458-00-A	1	use 10 ml
*	CLIP, DRAIN TUBE HARN STUD MNT	Unrestricted	CLIP, DRAIN TUBE HARN STUD MOUNT	1013843-00-A	4	
*	BLT,BTN,TRX,M5x16[10.9]-BK-X-SP-05	Unrestricted	BOLT, BUTTON HEAD, TORX, M5x16	1015888-00-C	6	
*	BLT WSHR FLAT M6-1.00x16 ZnAl	Unrestricted	BOLT WASHER FLAT M6-1.00x16 ZINC ALUMINUM	1004537-00-A	4	
*	BLT,PFLG,TRX,M5x25[08.8]-05	Unrestricted	BOLT, TORX, M5x25	1008884-00-C	1	

*	BUTYL TAPE 30 x 50 x 2	Unrestricted	BUTYL TAPE 30 MM x 50 MM x 2 MM	1013685-00-A	8	
*	PATCH, BUTYL 77mm X 120mm	Unrestricted	BUTYL PATCH 77MMX120MM	1018713-00-A	6	
*	ASY, PANO ROOF MOUNT SPACER	Unrestricted	PANORAMIC ROOF 2.1 MOUNT SPACER	1064454-00-B	2	
*	MOVING GLASS NETPADS	Unrestricted	MOVING GLASS NETPADS	1019258-00-A	3	
*	LUBRICANT-KRYTOX GPL 205	Unrestricted	KRYTOX LUBRICANT - GPL 205	1089957-00-A	1	Quantity 1 = 1.2 ml
*	FLOCKED TAPE, 100x30	Unrestricted	FLOCKED TAPE - 100MMX30MM	1020581-00-A	1	
*	BLT TRX MP M6-1.00x20 D12 [8.8] ZnAL	Unrestricted	BOLT, TORX, M6-1.00x20MM, 12MM DIAMETER - ZINC ALUMINUM	1005814-00-A	2	
*	SCR PAN TRX ST 4.2X16 ZnBlue	Unrestricted	SCREW PAN TORX M4.2X16 ZINC	1008889-00-A	2	included as part of 1026852-S0-A
*	CAP,HEX,M6[Plastic]-DOME	Unrestricted	CAP, HEX, M6, DOME, PLASTIC	1018062-00-A	8	
*	BLT,SHBC,M6x20- PATCH	Unrestricted	BOLT, SOCKET HEAD BUTTON CAP, M6x20 WITH PATCH	1010438-00-B	8	
*	NUT HF M6-1.00[8]ZnAl	Unrestricted	NUT M6-1.00 ZINC ALUMINUM	2007207	8	Order in quantities of 25; minimum order: 25.
*	FLOCKED TAPE, SUNSHADE CARRIER TABS	Unrestricted	SUNSHADE CARRIER TAB FLOCKED TAPE	1020172-00-A	4	
*	FLOCKED TAPE, SUNSHADE CARRIER HOLES	Unrestricted	SUNSHADE CARRIER HOLE FLOCKED TAPE	1020173-00-A	3	
*	RIVNUT,KNURL,M5,0.50-3.30 GRP L,STL,ZNC	Unrestricted	RIVNUT, KNURL, M5, STEEL, ZINC	1004296-00-A	2	
*	RIVNUT,KNURL,M5,0.50-2.54,STL,ZNNI-PLTSL	Unrestricted	RIVNUT, KNURL, M5, STEEL ZINC NICKEL	1026912-00-A	4	
*	Dow BetaSeal Express - 310ML CARTRIDGE	Unrestricted	DOW BETASEAL EXPRESS - 310ML	1048645-00-A	**	use 2185 ml
*	SHIM STOCK-PETG (508 X 1270 X 0.76 mm)	Unrestricted	SHIM STOCK	1025689-00-A	1	Instructions from SB-13-24-001 - cut into 28mm x 18mm pieces (4 per car)
*	ISOLATOR, PATCH, ROOF ANTI-SQUEEK	Unrestricted	ROOF ANTI-SQUEAK ISOLATOR PATCH	1025879-00-A	2	Instructions from SB-13-24-001 - pre-cut into 28mm x 18mm pieces (4 per car)
*	NUT HF M5 PC8	Unrestricted	NUT M5	1034958-00-A	14	
*	NET PAD, 25x25x2	Unrestricted	NET PAD, 25mm x 25mm x 2mm	1054077-00-A	1	
*	NET PAD, 40X8X1.5	Unrestricted	NET PAD, 40mm X 8mm X 1.5mm	1043739-00-A	**	
*	NET PAD, 40X8X3.5	Unrestricted	NET PAD, 40mm X 8mm X 3.5mm	1048647-00-A	**	

Panoramic Roof Fittings and Finishers

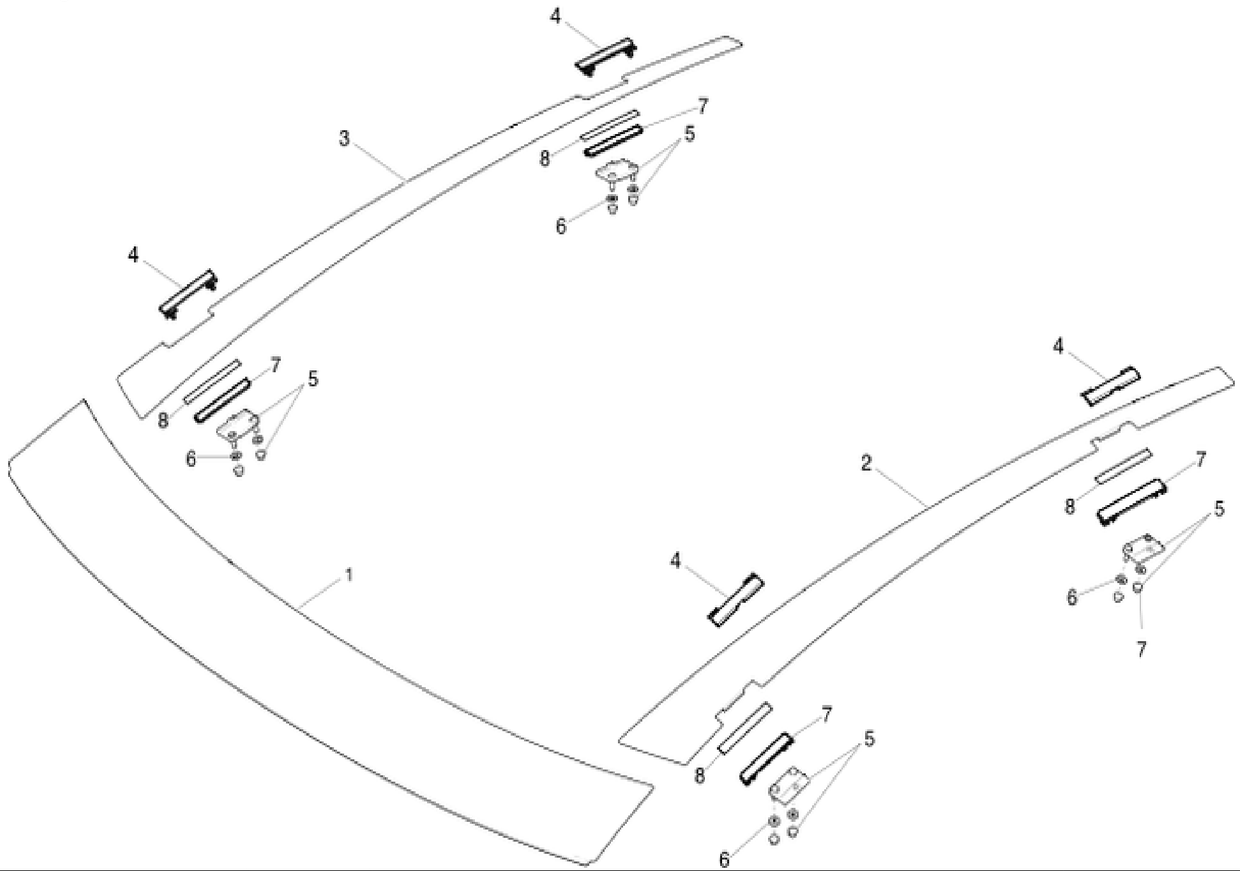

No	Part Name	Category	Part Description	Part Number	Qty	Comments
1	PAINTED FR APPLIQUE KIT, SERVICE	Unrestricted	PANORAMIC ROOF 2.1 PAINTED FRONT APPLIQUE - SERVICE KIT ASSEMBLY	1053588-S0-A	1	
*	3M ANTI SQUEAK TAPE	Unrestricted	3M ANTI-SQUEAK TAPE	1038607-00-A	**	Service Only
2	PAINTED SIDE APPLIQUE LH KIT, SERVICE	Unrestricted	PANORAMIC ROOF 2.1 LEFT SIDE APPLIQUE - SERVICE KIT ASSEMBLY	1053618-S0-A	1	
3	PAINTED SIDE APPLIQUE RH KIT, SERVICE	Unrestricted	PANORAMIC ROOF 2.1 PAINTED RIGHT SIDE APPLIQUE - SERVICE KIT ASSEMBLY	1053619-S0-A	1	
*	CLIP 23MM X 26MM X 12MM	Unrestricted	CLIP 23MM X 26MM X 12MM	1034957-00-B	1	
4	ROOF RACK DOOR	Unrestricted	ROOF RACK DOOR - 2.1	1052493-00-A	4	Included with 1053619-S0-A and 1053618-S0-A.
5	ASY, ROOF RACK MOUNTS KIT, SERVICE	Unrestricted	PANORAMIC ROOF 2.1 ROOF RACK MOUNTS - SERVICE KIT ASSEMBLY	1053626-S0-A	1	
8	TAPE, ROOF RACK DOOR MOUNT RING 88x12.7	Unrestricted	ROOF RACK DOOR MOUNT RING TAPE 88x12.7MM	1016074-00-A	4	
*	ROOF RACK SUPPORT BLOCK	Unrestricted	ROOF RACK SUPPORT BLOCK	1048666-00-A	4	

Panoramic Roof Frame and Drain Tubes

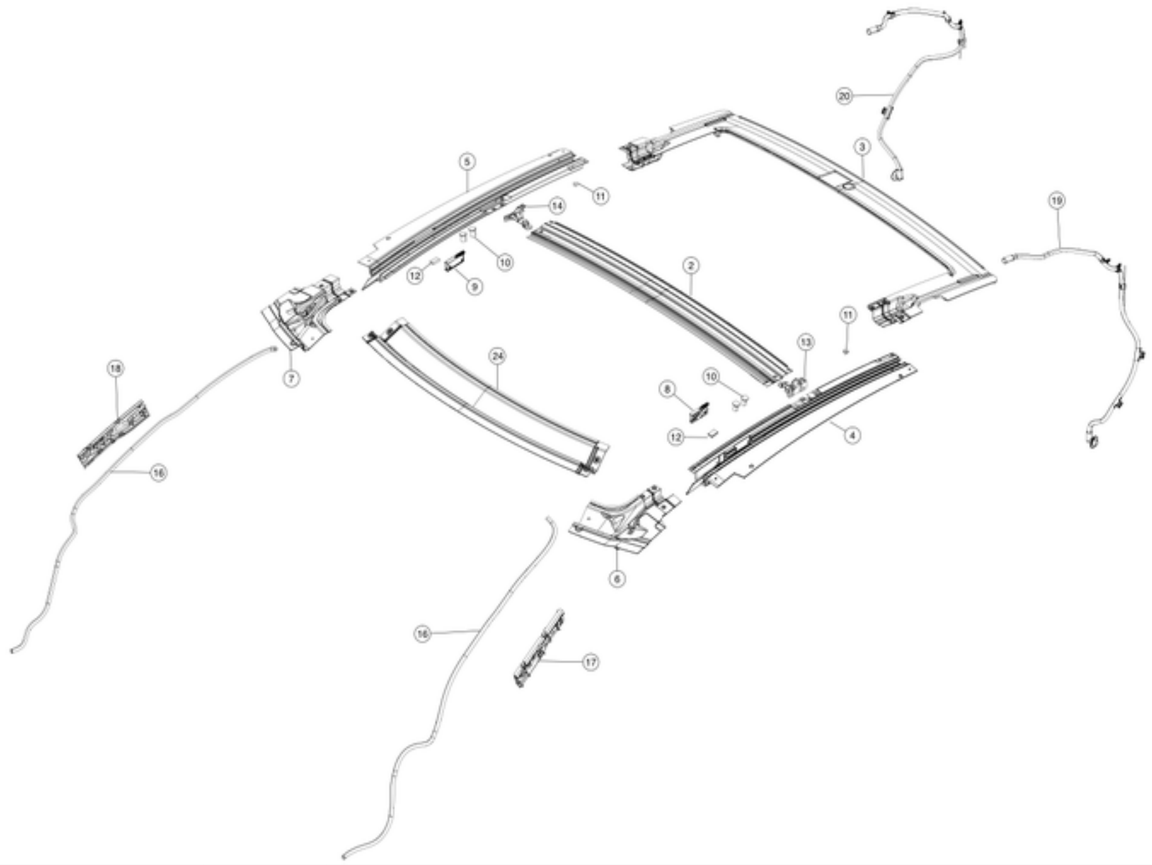

No	Part Name	Category	Part Description	Part Number	Qty	Comments
1	ROOF BASE FRAME ASY KIT, SERVICE	Unrestricted	PANORAMIC ROOF 2.1 BASE FRAME - SERVICE ASSEMBLY KIT	1053628-S0-A	1	
8	REAR CAM BLOCK - LEFT	Unrestricted	REAR CAM BLOCK - LEFT	6008661-00-C	1	
9	REAR CAM BLOCK- RIGHT	Unrestricted	REAR CAM BLOCK- RIGHT	6008673-00-C	1	
10	SPACER, SUNROOF FRAME TO BODY	Unrestricted	SUNROOF FRAME TO BODY SPACER	1015915-00-A	4	Order in quantities of 50; minimum order: 50.
*	BLT M6x1.00x20 [4.8] D BTNHD TRX ZnAl-W	Unrestricted	BOLT M6x1.00x20 BUTTON HEAD TORX ZINC ALUMINUM	1006579-00-A	4	Use with 1015915-00-A
*	WASHER, FLAT, M6, 16mm OD, 0.8mm THICK	Unrestricted	WASHER, FLAT, M6, 16MM OUTSIDE DIAMETER, 0.8MM THICK	1014448-00-A	4	Use with 1015915-00-A. Order in quantities of 25; minimum order: 25.
11	NET PAD REAR	Unrestricted	NET PAD - REAR	1014033-00-A	2	
11	NET PAD REAR	Unrestricted	NET PAD - REAR GLASS FRAME	1045677-00-B	2	
12	NET PAD FRONT	Unrestricted	NET PAD - FRONT	6008668-00-A	2	
13	BRKT, CONNECT B-PILLAR ROOF BOW PANO LH	Unrestricted	CONNECT B-PILLAR ROOF BOW PANORAMIC BRACKET - LEFT	1024426-00-A	1	
14	BRKT, CONNECT B-PILLAR ROOF BOW PANO RH	Unrestricted	CONNECT B-PILLAR ROOF BOW PANORAMIC BRACKET - RIGHT	1024427-00-A	1	
15	BUTYL TAPE 30 x 50 x 2	Unrestricted	BUTYL TAPE 30 MM x 50 MM x 2 MM	1013685-00-A	2	Not Illustrated
16	DRAIN TUBE	Unrestricted	DRAIN TUBE - FRONT	6008684-00-E	2	
17	BRKT-A PILLAR DRAIN TUBE MTG LH	Unrestricted	A-PILLAR DRAIN TUBE MOUNTING BRACKET - LEFT	1008371-00-E	1	
18	BRKT-A PILLAR DRAIN TUBE MTG RH	Unrestricted	A-PILLAR DRAIN TUBE MOUNTING BRACKET - RIGHT	1008372-00-E	1	
19	DRAIN TUBE-REAR LH	Unrestricted	DRAIN TUBE - REAR LEFT	1013244-00-F	1	
20	DRAIN TUBE-REAR RH	Unrestricted	DRAIN TUBE - REAR RIGHT	1013245-00-F	1	

*	ADHESIVE PROMOTER, 3M 4298UV	Unrestricted	ADHESIVE PROMOTER, 3M 4298, 4OZ PACKET	1061458-00-A	1	
23	DRAIN HOSE CLIP REAR DRAIN HOSE	Unrestricted	CLIP, DRAIN TUBE HARN STUD MOUNT	1013843-00-A	4	Not Illustrated
24	FRONT CROSS MEMBER	Unrestricted	PANORAMIC ROOF FRONT CROSS MEMBER	6008686-00-D	1	
*	BUTYL COATED VINYL FOAM 4.8 MM DIA	Unrestricted	BUTYL COATED VINYL FOAM 4.8 MM DIAMETER	1020362-00-A	1400	1400 mm

Roof Seals and Anti-Pinch Sensors

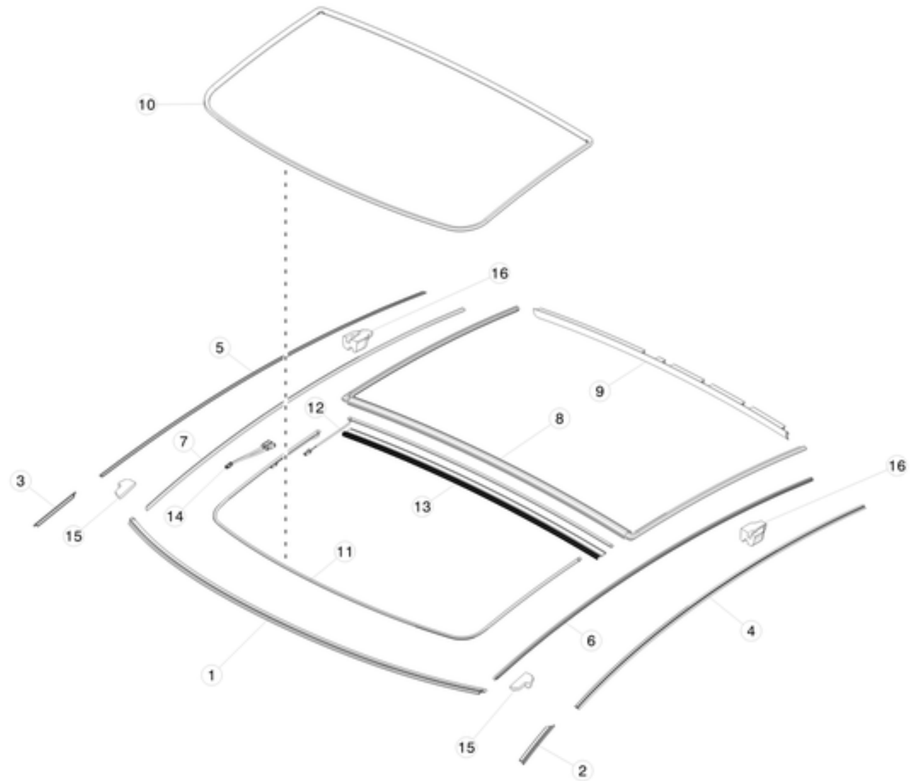

No	Part Name	Category	Part Description	Part Number	Qty	Comments
1	CROSS CAR SEAL - FRONT	Unrestricted	CROSS CAR SEAL - FRONT	1035034-00-C	1	
2	SEAL, OUTER TRIM SHORT LH, PANO ROOF	Unrestricted	SEAL, OUTER TRIM SHORT LH, PANORAMIC ROOF	NA	1	Only part of kit 1053588-S0-A. Not available separately.
3	SEAL, OUTER TRIM SHORT RH, PANC ROOF	Unrestricted	SEAL, OUTER TRIM SHORT RH, PANORAMIC ROOF	NA	1	Only part of kit 1053588-S0-A. Not available separately.
4	SEAL-OUTER TRIM LH	Unrestricted	OUTER TRIM SEAL - FRONT LEFT	1034262-00-B	1	
5	SEAL-OUTER TRIM RH	Unrestricted	OUTER TRIM SEAL - FRONT RIGHT	1034262-00-B	1	
6	INNER TRIM SEAL ASSY - LEFT	Unrestricted	INNER TRIM SEAL ASSY - LEFT	1034260-00-C	1	
7	INNER TRIM SEAL ASSY - RIGHT	Unrestricted	INNER TRIM SEAL ASSY - RIGHT	1034261-00-C	1	
8	TRIM SEAL REAR GLASS ASSY	Unrestricted	FIXED GLASS SEAL - PANORAMIC ROOF	1034991-00-C	1	
9	REAR GAP HIDER	Unrestricted	REAR GAP HIDER	1048886-00-B	1	Seal between the roof and headliner.
10	SEAL-MAIN	Unrestricted	MAIN SEAL	1039593-00-B	1	
11	ANTI-PINCH STRIP, SUNROOF, FR/RH/LH PANORAMIC	Unrestricted	ANTI-PINCH STRIP - FRONT LEFT AND RIGHT	1039448-00-B	1	
12	ANTI-PINCH STRIP, SUNROOF - REAR	Unrestricted	PANORAMIC ANTI-PINCH STRIP - REAR	1039449-00-A	1	
13	GAP HIDER - ROOF BOW	Unrestricted	ROOF BOW GAP HIDER	1045953-00-A	1	
14	ASY,CBL,MDLS,SUNROOF ANTIPINCH ADAPTOR	Unrestricted	SUNROOF ANTIPINCH ADAPTOR CABLE ASSEMBLY	1043063-00-A	1	
15	SEAL SUPPORT BLOCK FRONT	Unrestricted	SEAL SUPPORT BLOCK FRONT	1018752-00-A	1	
16	SEAL SUPPORT BLOCK REAR	Unrestricted	SEAL SUPPORT BLOCK REAR	1018755-00-B	2	

*	LUBRICANT-KRYTOX GPL 205	Unrestricted	KRYTOX LUBRICANT - GPL 205	1089957-00-A	1	Qty 1 = 1.2 ml
*	SEMI-CLOSED EPDM FOAM ROLL	Unrestricted	SEMI-CLOSED CELLULAR RUBBER (EPDM) 10x10mm, NO TAPE. 5FT STRIP.	1122892-00-A	1	Use for bulletin SB-17-10-001

Shades and Wind Deflector

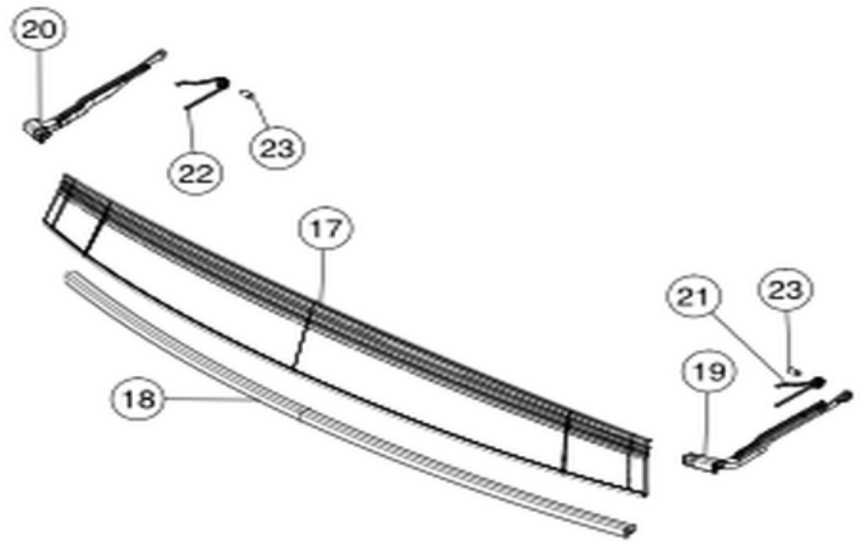

No	Part Name	Category	Part Description	Part Number	Qty	Comments
1	WIND DEFLECTOR KIT ASSY, SERVICE	Unrestricted	PANORAMIC ROOF 2.1 MESH WIND DEFLECTOR - SERVICE KIT ASSEMBLY	1060126-00-A	1	1011783-00-A, 1041598-00-B and 1041599-00-B must be ordered separately, if needed.
19	ARM, WIND DEFLECTOR LH	Unrestricted	WIND DEFLECTOR ARM - LEFT	1038164-00-C	1	Replace in pairs with item #20.
20	ARM, WIND DEFLECTOR RH	Unrestricted	WIND DEFLECTOR ARM - RIGHT	1038165-00-C	1	Replace in pairs with item #19.
21	SPRING, WIND DEFLECTOR LH	Unrestricted	WIND DEFLECTOR SPRING - LEFT	1041598-00-B	1	
22	SPRING, WIND DEFLECTOR RH	Unrestricted	WIND DEFLECTOR SPRING - RIGHT	1041599-00-B	1	
23	PIVOT BLOCK, WIND DEFLECTOR	Unrestricted	WIND DEFLECTOR PIVOT BLOCK	1043024-00-C	2	
*	SCREW TORX M5 x 8 TRUSS HEAD (T25)	Unrestricted	SCREW TORX M5 x 8 TRUSS HEAD (T25)	1011783-00-A	2	

AIR BAGS

Front Air Bags

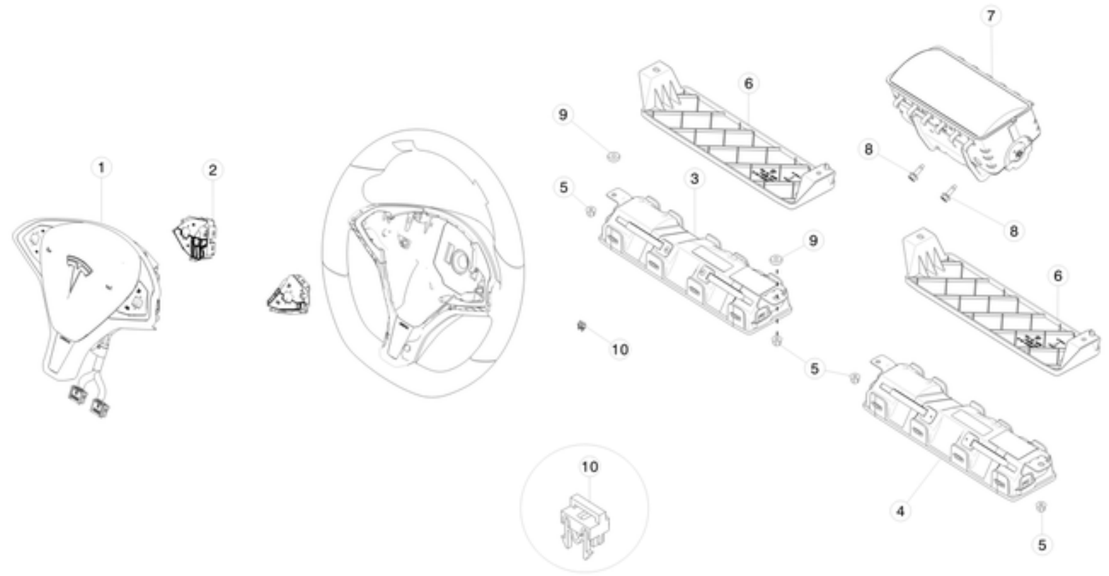

No	Part Name	Category	Part Description	Part Number	Qty	Comments
1	ASY DRIVER AIRBAG, PAINTED (FOR US AND CA MARKET)	Unrestricted	DRIVER AIRBAG ASSEMBLY - BASE - NORTH AMERICA	1023381-00-G	1	
1	NAR, DAB ASSY, PAINTED - HEATED	Unrestricted	DRIVER AIRBAG ASSEMBLY - BASE WITH HEATER - NORTH AMERICA	1036778-00-B	1	
1	ASY DRIVER AIRBAG, LEATHER (FOR US AND CA MARKET)	Unrestricted	DRIVER AIRBAG ASSEMBLY - LEATHER - NORTH AMERICA	1023381-01-G	1	
1	NAR, DAB ASSY, LEATHER - HEATED	Unrestricted	DRIVER AIRBAG ASSEMBLY - LEATHER WITH HEATER - NORTH AMERICA	1036778-01-B	1	
2	ASY, STEERING CONTROL SWITCH HARNESS	Unrestricted	STEERING CONTROL SWITCH ASSEMBLY HARNESS	1013242-00-F	1	
3	Knee Airbag Assy - LH	Unrestricted	KNEE AIRBAG ASSEMBLY - LEFT	1005259-00-G	1	
4	Knee Airbag Assy - RH	Unrestricted	KNEE AIRBAG ASSEMBLY - RIGHT	1005260-00-H	1	
5	NUT,FLG,HEX,M6x1.00[8]-14	Unrestricted	NUT, LOCK, HEX, FLANGE, M6x1.00	1004378-00-B	4	Order in quantities of 50; minimum order: 50.
6	KAB Closeout	Unrestricted	KNEE AIRBAG CLOSEOUT	1028867-00-B	1	Use in vehicles without Knee Airbag.
7	PASSENGER AIR BAG ASY	Unrestricted	PASSENGER AIRBAG ASSEMBLY	1005256-00-E	1	
8	BOLT HF M6x1.00x16 DP [8.8]	Unrestricted	BOLT, M6x1.00x16MM	1004341-00-B	2	Use to install item #6.
9	5MM SPACER, DRIVER KAB	Unrestricted	5MM SPACER - DRIVER KNEE AIRBAG	1019499-00-A	2	Use to install item #3.
10	AIRBAG HARNESS RETAINING CLIP	Unrestricted	AIRBAG HARNESS RETAINING CLIP	1028053-00-A	1	One time use.
*	CONNECTOR SECONDARY LOCK	Unrestricted	YELLOW LOCKING CLIP FOR HARNESS	1015040-00-A	2	

Side Air Bags

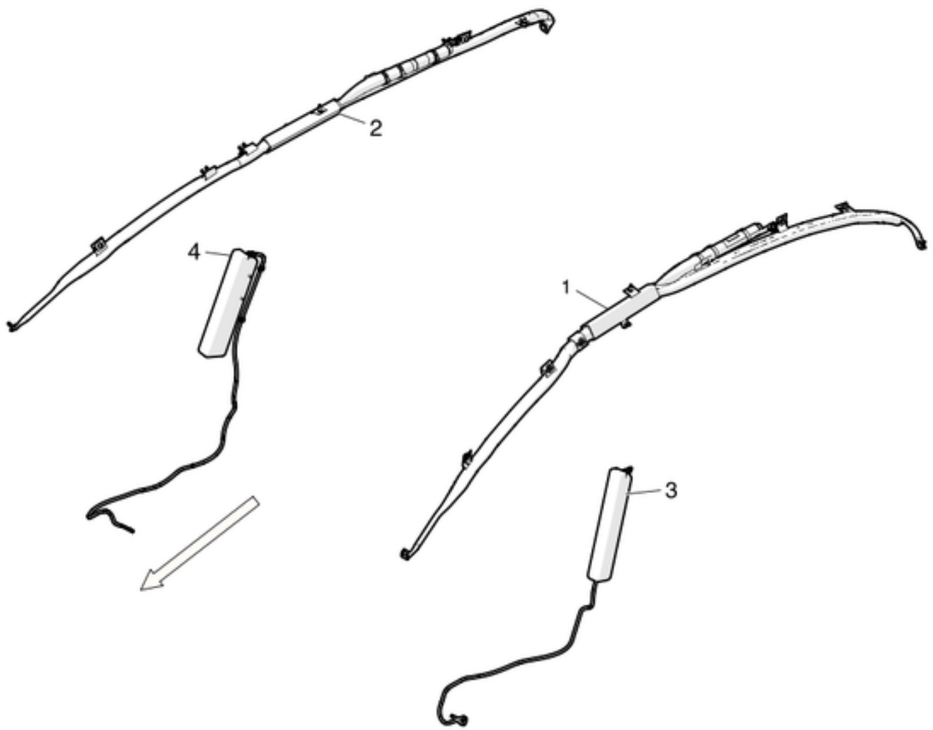

No	Part Name	Category	Part Description	Part Number	Qty	Comments
1	CURTAIN AIRBAG ASSY - LH	Unrestricted	CURTAIN AIRBAG ASSEMBLY - LEFT	1005261-00-E	1	
2	CURTAIN AIRBAG ASSY RH	Unrestricted	CURTAIN AIRBAG ASSEMBLY - RIGHT	1005262-00-E	1	
3	SIDE AIRBAG ASSY - LH	Unrestricted	SIDE AIRBAG ASSEMBLY - LEFT	N/A	1	Only available as part of the Front Seat Back Assembly
4	SIDE AIRBAG ASSY - RH	Unrestricted	SIDE AIRBAG ASSEMBLY - RIGHT	N/A	1	Only available as part of the Front Seat Back Assembly
*	CLIP, M6, Burnex BUR100015	Unrestricted	CLIP, M6, BUR100015	1013802-00-B	2	use to install item #1 and 2.

PRE-TENSIONERS

Pre-Tensioners

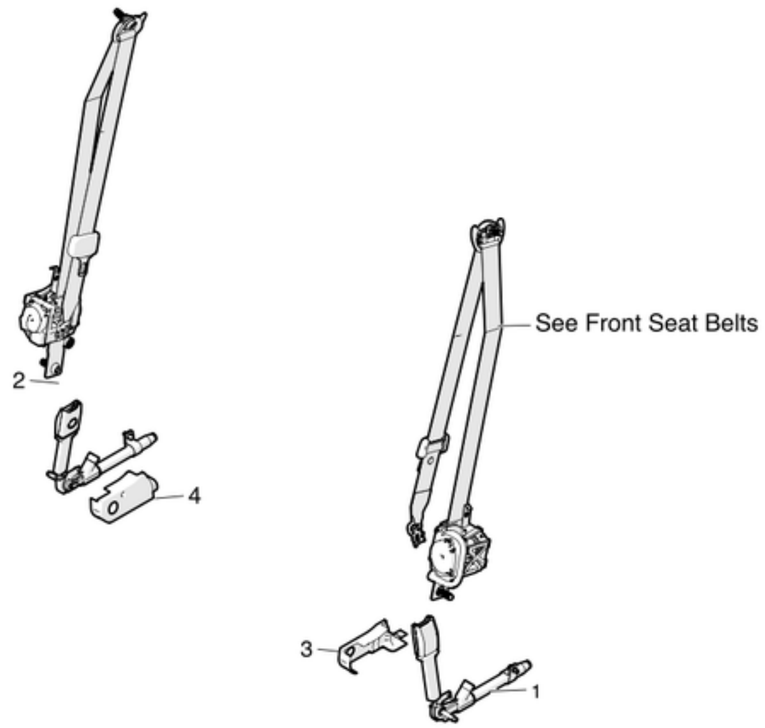

No	Part Name	Category	Part Description	Part Number	Qty	Comments
1	OUTBOARD LAP PRETEN, LH BLK	Unrestricted	OUTBOARD LAP PRETENSIONER - LEFT BLACK	1004532-05-F	1	
2	OUTBOARD LAP PRETEN, RH BLK	Unrestricted	OUTBOARD LAP PRETENSIONER - RIGHT BLACK	1005265-05-F	1	
*	ANCHOR PRETEN COVER ASSY UPPER - MAMMOTH	Unrestricted	PRETENSION ANCHOR COVER ASSEMBLY - UPPER BLACK	1011544-05-A	2	
*	ANCHOR PRETEN BOLT CAP - MAMMOTH	Unrestricted	PRETENSION ANCHOR BOLT CAP - UPPER BLACK	1011542-05-A	2	
*	AMP 1376031-1 CONNECTOR	Unrestricted	BLACK LOCKING CLIP FOR HARNESS	1015026-00-A	2	
*	PYROTECHNIC FUSE	Unrestricted	PYROTECHNIC FUSE (LOCATION: F93)	1004635-00-A	1	Approved Body Shop Only. (F93) Replace after collision resulting in airbag and/or pretensioner deployment. Do not install on unrepaired damaged vehicles. Refer to BR-15-00-001.

SEAT BELTS

2nd Row Seat Belts

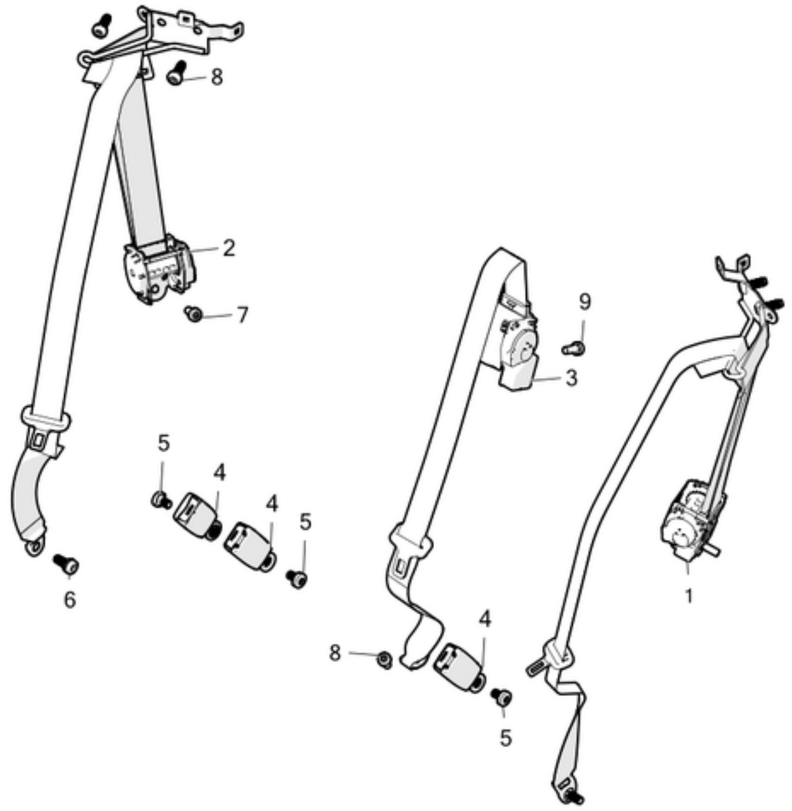

No	Part Name	Category	Part Description	Part Number	Qty	Comments
1	US/CA SEATBELT ASY, 2ND ROW LH BLK/WHT	Unrestricted	USA/CANADA - 2ND ROW SEATBELT ASSEMBLY - BLACK	1023136-05-D	1	OK to use 1023136-00-C.
2	US/CA SEATBELT ASY, 2ND ROW LH BLK/WHT	Unrestricted	USA/CANADA - 2ND ROW SEATBELT ASSEMBLY - BLACK	1023136-00-C	1	
3	US/CAN - SEATBELT ASSY,2ND ROW CTR BLK	Unrestricted	USA/CANADA - 2ND ROW SEATBELT ASSEMBLY - CENTER BLACK	1005267-00-B	1	
4	US - BUCKLE ASY, 2ND ROW, BLK	Unrestricted	USA - 2ND ROW BUCKLE ASSEMBLY - BLACK	1005269-00-E	3	USA only.
4	CN/EU - BUCKLE SWITCH ASY, 2ND ROW, BLK	Unrestricted	CANADA AND EUROPE - 2ND ROW BUCKLE ASSEMBLY - BLACK	1018791-00-D	3	For Canada and Europe.
5	Bolt	Unrestricted	SCREW - SEAT GEARBOX HOUSING	NA	3	Only avilable with item #4.
6	2ND ROW OUTBOARD ANCHOR BOLT	Unrestricted	2ND ROW OUTBOARD ANCHOR BOLT	1024900-00-A	2	
7	Bolt	Unrestricted	SCREW - SEAT GEARBOX HOUSING	NA	2	Only avilable with items #1 and 2.
8	BLT, 4.4SHLDR, PAN HEAD M12 x 1.75 x 28	Unrestricted	BOLT, 4.4 SHOULDER, PAN HEAD M12 x 1.75 x 28	1013031-00-A	4	
9	BOLT, 2ND ROW CENTER RETRACTOR	Unrestricted	BOLT, 2ND ROW CENTER RETRACTOR	NA	1	Not currently avaiable - replace 2nd row seat back.
10	BLT, 4.4SHLDR, PAN HEAD M12 x 1.75 x 28	Unrestricted	BOLT, 4.4 SHOULDER, PAN HEAD M12 x 1.75 x 28	1013031-00-A	1	
*	US/CA/EU - SEATBELT BRKT, 2ND ROW LH - metal	Unrestricted	USA/CANADA/EUROPE - 2ND ROW SEATBELT BRACKET - LEFT - METAL	1022114-00-B	1	
*	US/CA/EU - SEATBELT BRKT, 2ND ROW RH - metal	Unrestricted	USA/CANADA/EUROPE - 2ND ROW SEATBELT BRACKET - RIGHT - METAL	1022115-00-B	1	

*	LOCK NUT,7/16-20 in, cl 8, 96 hr Zn	Unrestricted	LOCK NUT ,7/16-20 IN	1023048-00-D	2	Use on 2nd row seatbelt brackets.

3rd Row Seat Belts

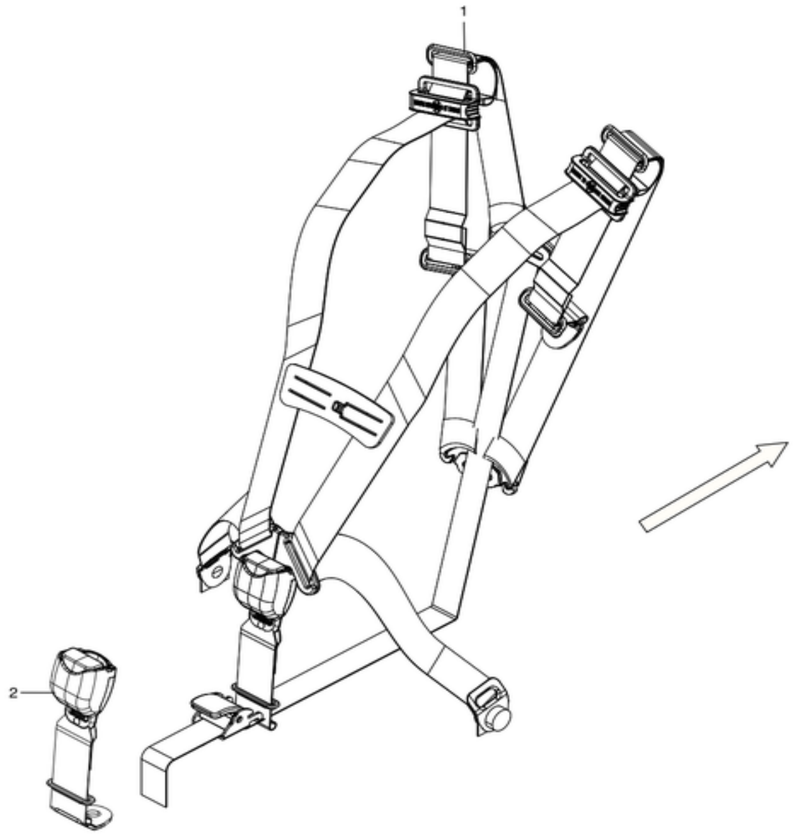

No	Part Name	Category	Part Description	Part Number	Qty	Comments
1	US/CA - SEATBELT ASY, 3RD ROW, BLK	Unrestricted	USA/CANADA - 3RD ROW SEATBELT ASSEMBLY - BLACK	1005270-00-D	2	
2	BUCKLE SWITCH ASSY, 3RD ROW	Unrestricted		NA	2	only available with 1005270-00-D

Front Seat Belts

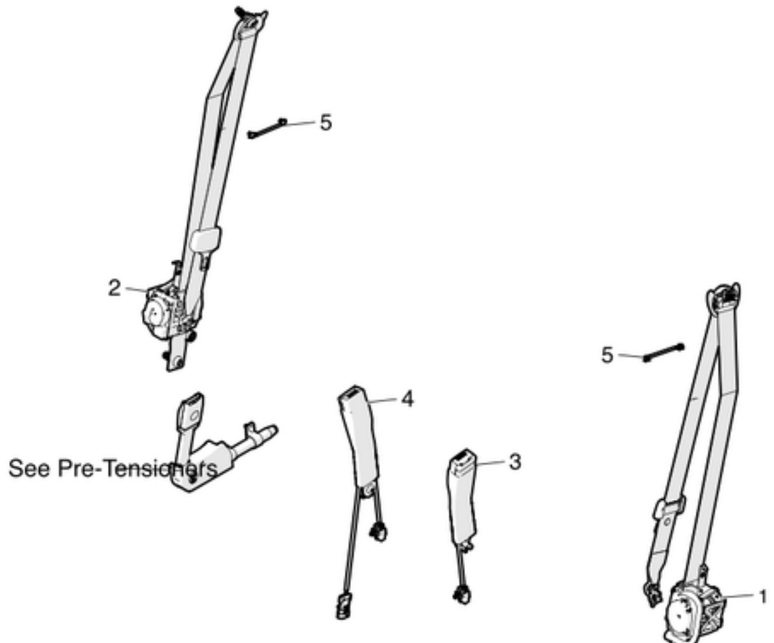



No	Part Name	Category	Part Description	Part Number	Qty	Comments
1	US/CA - SEATBELT ASY, 1ST ROW LH BLK/FOG BEZEL	Unrestricted	USA/CANADA - 1ST ROW SEATBELT ASSEMBLY - LEFT BLACK WITH FOG BEZEL	1019468-02-C	1	For vehicles built before October 8, 2016. Option codes: UTAW AND RENA.
1	US/CA - SEATBELT ASY, 1ST ROW LH BLK/FOG	Unrestricted	USA/CANADA - 1ST ROW SEATBELT ASSEMBLY - LEFT BLACK WITH FOG BEZEL	1079275-02-D	1	For vehicles built on or after October 8, 2016. Option codes: UTAW AND RENA. OK to replace -A and -B. OK to use -C.
1	US/CA - SEATBELT ASY, 1ST ROW LH BLK/BLK BEZEL	Unrestricted	USA/CANADA - 1ST ROW SEATBELT ASSEMBLY - LEFT BLACK WITH BLACK BEZEL	1019468-03-C	1	For vehicles built before October 8, 2016. Option codes: UTAB AND RENA.
1	US/CA - SEATBELT ASY, 1ST ROW LH BLK/BLK BEZEL	Unrestricted	USA/CANADA - 1ST ROW SEATBELT ASSEMBLY - LEFT BLACK WITH BLACK BEZEL	1079275-03-D	1	For vehicles built on or after October 8, 2016. Option codes: UTAB AND RENA. OK to replace -A and -B. OK to use -C.
2	US/CA - SEATBELT ASY, 1ST ROW RH BLK/FOG BEZEL	Unrestricted	USA/CANADA - 1ST ROW SEATBELT ASSEMBLY - RIGHT BLACK WITH FOG BEZEL	1019469-02-B	1	For vehicles built before October 8, 2016. Option codes: UTAW AND RENA AND DV2W.
2	US/CA - SEATBELT ASY, 1ST ROW RH BLK/FOG BEZEL	Unrestricted	USA/CANADA - 1ST ROW SEATBELT ASSEMBLY - RIGHT BLACK WITH FOG BEZEL	1079278-02-C	1	For vehicles built on or after October 8, 2016. Option codes: UTAW AND RENA AND DV2W.
2	US/CA - SEATBELT ASY, 1ST ROW RH BLK/BLK BEZEL	Unrestricted	USA/CANADA - 1ST ROW SEATBELT ASSEMBLY - RIGHT BLACK WITH BLACK BEZEL	1019469-03-B	1	For vehicles built before October 8, 2016. Option coces: UTAB AND RENA AND DV2W.
2	US/CA - SEATBELT ASY, 1ST ROW RH BLK/BLK BEZEL	Unrestricted	USA/CANADA - 1ST ROW SEATBELT ASSEMBLY - RIGHT BLACK WITH BLACK BEZEL	1079278-03-C	1	For vehicles built on or after October 8, 2016. Option codes: UTAB AND RENA AND DV2W.
2	US/CA - SEATBELT ASY, 1ST ROW RH BLK/FOG	Unrestricted	USA/CANADA - 1ST ROW SEATBELT ASSEMBLY - RIGHT BLACK WITH WHITE BEZEL	1048259-02-A	1	For vehicles built before October 8, 2016. Option codes: UTAW AND RENA AND DV4W.
2	US/CA - SEATBELT ASY, 1ST ROW RH BLK/FOG	Unrestricted	USA/CANADA - 1ST ROW SEATBELT ASSEMBLY - RIGHT BLACK WITH WHITE BEZEL	1079284-02-C	1	For vehicles built on or after October 8, 2016. Option codes: UTAW AND RENA AND DV4W. OK to replace -A and -B.
2	US/CA - SEATBELT ASY, 1ST ROW RH BLK/BLK	Unrestricted	USA/CANADA - 1ST ROW SEATBELT ASSEMBLY - RIGHT BLACK WITH BLACK BEZEL	1048259-03-A	1	For vehicles built before October 8, 2016. Option codes: UTAB AND RENA AND DV4W.
2	US/CA - SEATBELT ASY, 1ST ROW RH BLK/BLK	Unrestricted	USA/CANADA - 1ST ROW SEATBELT ASSEMBLY - RIGHT BLACK WITH BLACK BEZEL	1079284-03-C	1	For vehicles built on or after October 8, 2016. Option codes: UTAB AND RENA AND DV4W. OK to replace -A and -B.
*	BLT M8-1.25x12 T45 TORX	Unrestricted	BOLT, M8-1.25x12, T45 TORX	1011747-00-A	2	Use to install items #1 and 2.
*	1ST ROW D-RING BOLT, 7/16-20 37L	Unrestricted	1ST ROW D-RING BOLT, 7/16-20 37L	1016072-00-A	2	Use to install items #1 and 2.
*	Wear-Rsist Slipry Ultra Wght Tape	Unrestricted	WEAR-RESISTANT SLIPPERY RESISTANT TAPE	1089963-00-A	**	Use on D-ring.

3	US - BUCKLE SWITCH ASY, 1ST ROW LH, BLK	Unrestricted	USA - BUCKLE SWITCH ASSEMBLY, 1ST ROW LEFT, BLACK	1005990-05-G	1	USA only. Option codes: USSB AND FR01; USSB AND FR02; USSB AND FR04.
3	EU/CA - BUCKLE SWITCH ASY, 1ST ROW LH, BLK	Unrestricted	EUROPE/CANADA - BUCKLE SWITCH ASSEMBLY, 1ST ROW LEFT, BLACK	1019493-05-E	1	Canada only. Option codes: CASB AND FR04 AND DRLH.
3	US - BUCKLE SWITCH ASY, 1ST ROW LH, TAN	Unrestricted	USA - BUCKLE SWITCH ASSEMBLY, 1ST ROW LEFT, TAN	1005990-06-G	1	USA only. Option codes: USST AND FR01; USST AND FR02.
3	US - BUCKLE SWITCH ASY, 1ST ROW LH, WHITE	Unrestricted	USA - BUCKLE SWITCH ASSEMBLY, 1ST ROW LEFT, WHITE	1005990-07-G	1	USA only. Option codes: USSW AND FR01; USSW AND FR02.
4	US - BUCKLE SWITCH ASY, 1ST ROW RH, BLK	Unrestricted	USA - BUCKLE SWITCH ASSEMBLY, 1ST ROW RIGHT, BLACK	1005991-05-H	1	USA only. Option codes: USSB AND FR01; USSB AND FR02; USSB AND FR04.
4	US - BUCKLE SWITCH ASY, 1ST ROW RH, TAN	Unrestricted	USA - BUCKLE SWITCH ASSEMBLY, 1ST ROW RIGHT, TAN	1005991-06-H	1	USA only. Option codes: USST AND FR01; USST AND FR02.
4	US - BUCKLE SWITCH ASY, 1ST ROW RH, WHITE	Unrestricted	USA - BUCKLE SWITCH ASSEMBLY, 1ST ROW RIGHT, WHITE	1005991-07-H	1	USA only. Option codes: USSW AND FR01; USSW AND FR02.
5	SEAT BELT WEBBING GUIDE - 1ST ROW	Unrestricted	1ST ROW SEATBELT WEBBING GUIDE	1011541-00-A	1	
*	BLACK-OXIDE STEEL SAE STANDARD WASHER - 1ST ROW SEAT BELT	Unrestricted	1ST ROW SEAT BELT BLACK-OXIDE STEEL SAE WASHER	1023002-00-A	**	

SENSORS

Impact and Acceleration Sensors



No	Part Name	Category	Part Description	Part Number	Qty	Comments
1	ACCEL IMPACT SENSOR ASSY	Unrestricted	ACCELERATION IMPACT SENSOR ASSEMBLY	1005274-00-B	2	Use on the front end module and the B-Pillars; the fastener is included with the part, and is not available separately.
2	FRONT DOOR PRESSURE SENSOR ASSY	Unrestricted	FRONT DOOR PRESSURE SENSOR ASSEMBLY	1005275-00-A	2	Use on front doors.
3	PRESSURE SENSOR FASTENER	Unrestricted	SCREW, M5x16 TORX SOCKET HEAD	1004646-00-A	4	Use on item #2. Order in quantities of 25; minimum order: 25.
4	ACCEL IMPACT SENSOR ASSY	Unrestricted	ACCELERATION IMPACT SENSOR ASSEMBLY	1005274-00-B	2	Use on B-Pillars.
5	ACCEL IMPACT SENSOR ASSY	Unrestricted	ACCELERATION IMPACT SENSOR ASSEMBLY	1005274-00-B	2	Use on C-Pillars.
6	PSRCM UNIT ASSY, NORTH AMERICA	Unrestricted	NORTH AMERICA/KOREA -PASSIVE SAFETY RESTRAINTS CONTROL MODULE	1032224-00-B	1	
7	BLT TRX MP M6-1.00x20 D12 [8.8] ZnAL	Unrestricted	BOLT, TORX, M6-1.00x20MM, 12MM DIAMETER - ZINC ALUMINUM	1005814-00-A	3	Use on item #5

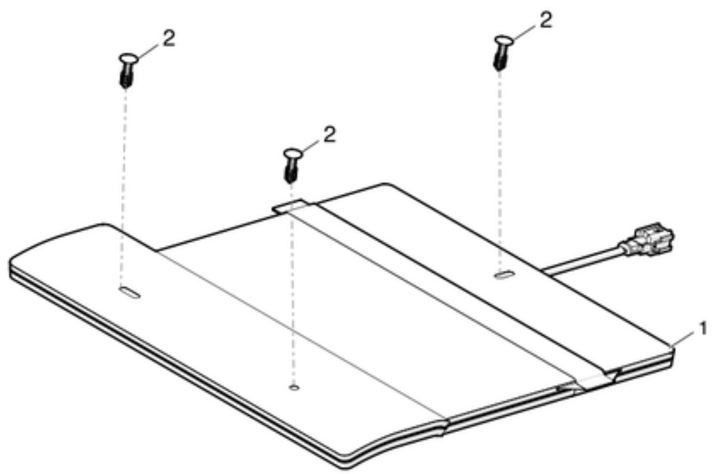

No	Part Name	Category	Part Description	Part Number	Qty	Comments
1	PODS UNIT ASSY	Unrestricted	PODS UNIT ASSY (PASSENGER SIDE OCCUPANCY SENSOR)	NA	2	Not available separately - only available with front seat cushion.
2	Trim Stud	Unrestricted	SCREW - SEAT GEARBOX HOUSING	TBA	3	

1301 - Front Seat Tracks and Motors

Front Seat Control Switches - X into S Seats (After August 2016 - Current)

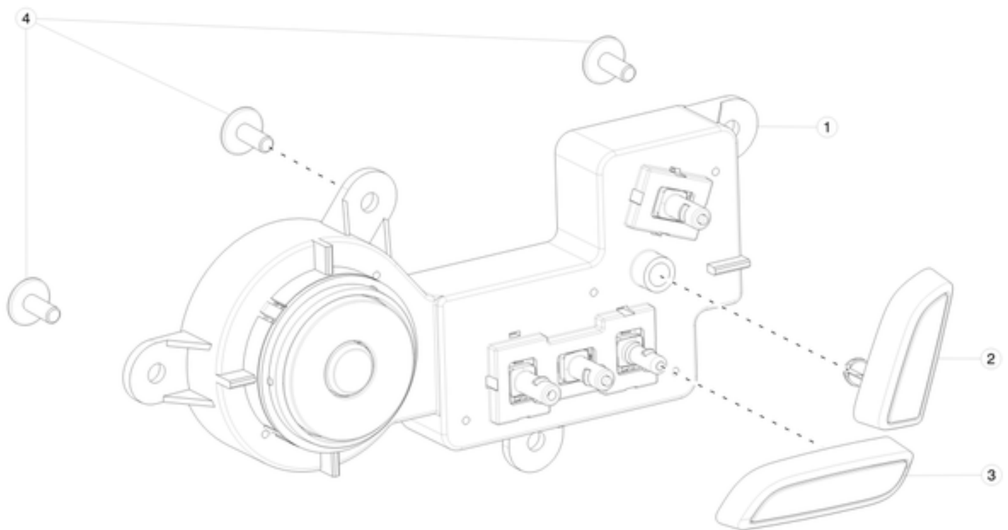



No	Part Name	Category	Part Description	Part Number	Qty	Comments
1	Frt LH seat switch MIC	Unrestricted	Frt LH seat switch MIC	1067690-00-D	1	1067690-00-D can replace 1067690-00-C
1	Frt RH seat switch MIC	Unrestricted	Frt RH seat switch MIC	1067689-00-D	1	1067689-00-D can replace 1067689-00-C
2	Frt LH Seat Back Btn Cap MIC	Unrestricted	Frt LH Seat Back Btn Cap MIC	1067694-00-B	1	
2	Frt RH Seat Back Btn Cap MIC	Unrestricted	Frt RH Seat Back Btn Cap MIC	1067692-00-B	1	
3	Frt LH Seat Fore-Aft Btn Cap MIC	Unrestricted	Frt LH Seat Fore-Aft Btn Cap MIC	1067693-00-B	1	
3	Frt RH Seat Fore-Aft Btn Caph MIC	Unrestricted	Frt RH Seat Fore-Aft Btn Cap MIC	1067691-00-B	1	
4	SCR PF 8-18x10 STL	Unrestricted	SCR PF 8-18x10 STL	1067383-00-A	8	

Front Seat Control Switches (Before August 2016)

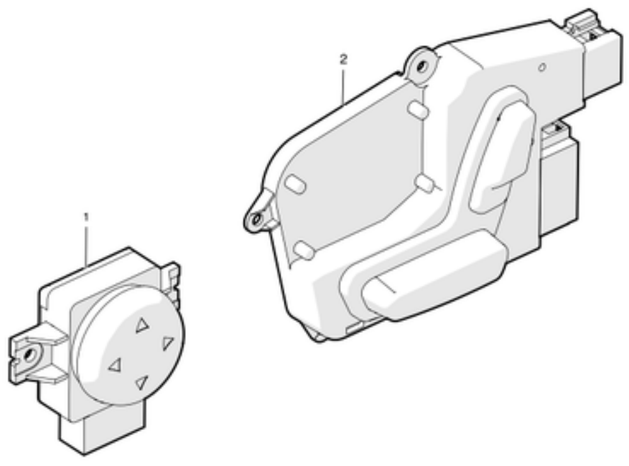

No	Part Name	Category	Part Description	Part Number	Qty	Comments
1	SWITCH LUMBAR 4WAY BLK	Unrestricted	SWITCH LUMBAR 4-WAY BLACK	1007274-00-A	2	
2	SWITCH SEAT 8WAY LH BLACK	Unrestricted	SWITCH SEAT 8-WAY LEFT BLACK	1007271-00-A	1	
3	SWITCH SEAT 8WAY RH BLACK	Unrestricted	SWITCH SEAT 8-WAY RIGHT BLACK	1007273-00-A	1	
*	FRNT 12 WAY PASS RH MAIN HARNESS EU	Unrestricted	FRONT 12 WAY PASSENGER RIGHT MAIN HARNESS EUROPE	1031338-00-B	1	
*	FRNT 12 WAY DRVR LH MAIN HARN NO-MEMORY	Unrestricted	FRONT 12 WAY DRIVER LEFT MAIN HARNESS NON-MEMORY	1031339-00-B	1	
*	FRNT 12 WAY DRVR RECLINER PATCH HARN NO-MEMORY	Unrestricted	FRONT 12 WAY DRIVER RECLINER PATCH HARNESS NON-MEMORY	1031340-00-A	1	
*	FRNT 12 WAY DRVR RECLINER PATCH HARN MEMORY	Unrestricted	FRONT 12 WAY DRIVER RECLINER PATCH HARNESS MEMORY	1031341-00-A	1	
*	FRNT 12 WAY PASS RH RECLINER PATCH HARN	Unrestricted	FRONT 12 WAY PASSENGER RIGHT RECLINER PATCH HARNESS	1031342-00-A	1	
*	Memory Patch Harness RHD RH	Unrestricted	MEMORY PATCH HARNESS RIGHT - RIGHT HAND DRIVE	1043036-00-A	1	

Front Seat Slides Motors and Controllers

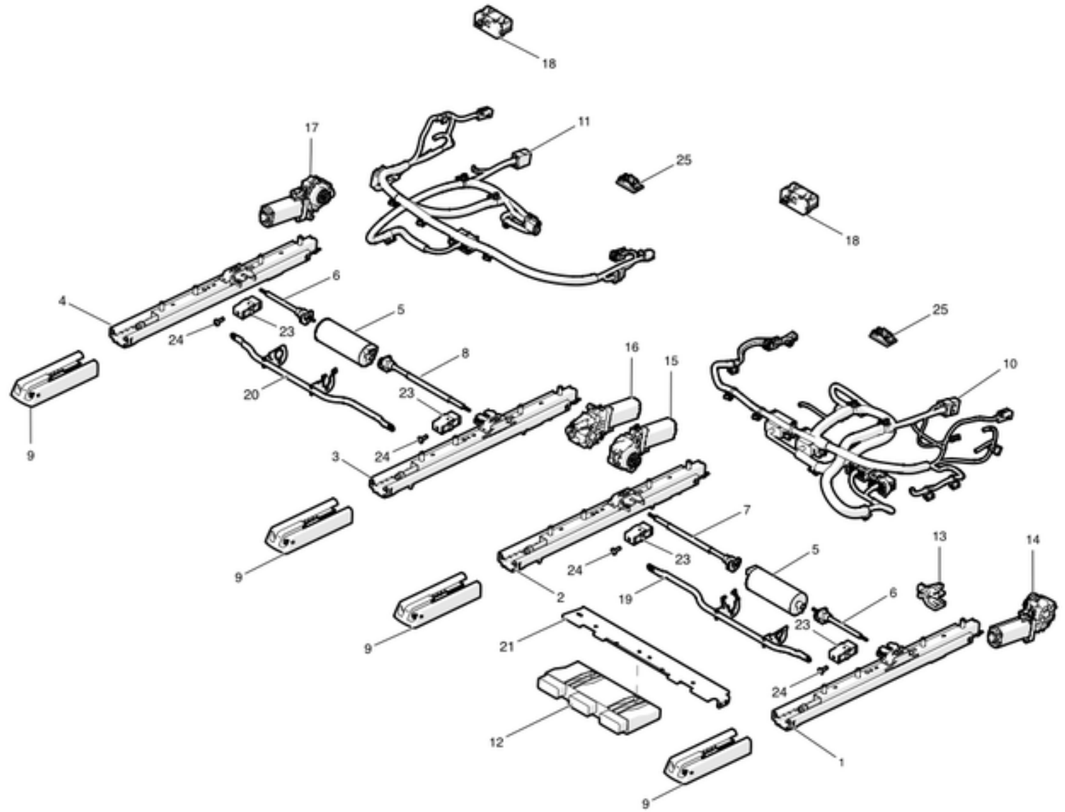

No	Part Name	Category	Part Description	Part Number	Qty	Comments
1	Track - Outer - LH Front Seat	Unrestricted	SEAT TRACK LEFT OUTER	NA	1	Only available with front seat structure.
2	Track - Inner - LH Front Seat	Unrestricted	SEAT TRACK LEFT INNER	NA	1	Only available with front seat structure.
3	INBOARD SEAT TRACK FOR RH SEAT	Unrestricted	SEAT TRACK RIGHT INNER	NA	1	Only available with front seat structure.
4	OUTBOARD SEAT TRACK FOR RH SEAT	Unrestricted	SEAT TRACK RIGHT OUTER	NA	1	Only available with front seat structure.
5	SLIDE MOTOR FOR SEAT WITH NO MEMORY FUNCTION, MOTOR A ON MOTOR MAP	Unrestricted	SLIDE MOTOR NON-MEMORY	NA	1	Only available with front seat structure.
5	SLIDE MOTOR WITH MEMORY FUNCTION, MOTOR A ON MOTOR MAP	Unrestricted	SLIDE MOTOR MEMORY	NA	1	Only available with front seat structure.
6	SLIDE MOTOR FLEX DRIVE SHORT	Unrestricted	SLIDE MOTOR FLEX DRIVE SHORT	NA	2	Only available with front seat structure.
7	SLIDE MOTOR FLEX DRIVE LONG LH	Unrestricted	SLIDE MOTOR FLEX DRIVE LONG LH	NA	1	Only available with front seat structure.
8	SLIDE MOTOR FLEX DRIVE LONG RH	Unrestricted	SLIDE MOTOR FLEX DRIVE LONG RH	NA	2	Only available with front seat structure.
9	COVER TRACK FRONT SEAT LH	Unrestricted	COVER TRACK FRONT SEAT - LEFT FRONT	1031675-00-A	2	
9	COVER TRACK FRONT SEAT RH	Unrestricted	COVER TRACK FRONT SEAT - RIGHT FRONT	1031676-00-A	2	
*	MS FS REAR END TRACK COVER LHD OB	Unrestricted	FRONT SEAT TRACK COVER - LEFT HAND DRIVE - DRIVER SIDE REAR OUTER	1051475-00-A	1	
*	MS FRONT SEAT REAR END TRACK COVERS DRIVER IB, PASSENGER IB and OB AND RHD IB AND PASSENGER IB AND OB.	Unrestricted	REAR INNER AND PASSENGER SIDE OUTER	1051476-00-A	3	
10	Harness - Front Seat LH - Base	Unrestricted	SEAT HARNESS BASE LEFT	1013086-00-B	1	

10	SEAT HARNESS NONBASE LH	Unrestricted	SEAT HARNESS PREMIUM LEFT	1013118-00-B	1	
11	SEAT HARNESS BASE RH	Unrestricted	SEAT HARNESS BASE RIGHT	1013106-00-B	1	
11	SEAT HARNESS RH NONBASE	Unrestricted	SEAT HARNESS PREMIUM RIGHT	1013126-00-B	1	
12	Memory Seat Module (MSM) for Driver's Seat	Unrestricted	MEMORY SEAT MODULE - DRIVER	1011838-00-H	1	
13	TRACK POSITION SENSOR ASSEMBLY	Unrestricted	TRACK POSITION SENSOR	1012072-00-A	1	Only available with front seat structure.
14	MOTOR B NONMEM	Unrestricted	MOTOR, PROVIDES LIFT FUNCTION FOR LH NONMEM SEATS	1013085-00-A	1	2 pin connector
14	MOTOR B MEM	Unrestricted	MOTOR, PROVIDES LIFT TO LH SEAT AND TILT TO RH SEAT	1013110-00-A	1	4 pin connector
15	MOTOR C MEM	Unrestricted	MOTOR, PROVIDING TILT TO LH SEAT AND LIFT TO RH SEAT	1013111-00-A	1	4 pin connector
16	MOTOR B MEM	Unrestricted	MOTOR, PROVIDING LIFT TO LH SEAT AND TILT TO RH SEAT	1013110-00-A	1	4 pin connector
17	MOTOR C NONMEM	Unrestricted	MOTOR, PROVIDES LIFT TO BASE RH SEAT	1013104-00-A	1	2 pin connector
17	MOTOR C MEM	Unrestricted	MOTOR, PROVIDING TILT TO LH SEAT AND LIFT TO RH SEAT	1013111-00-A	1	4 pin connector
18	DRIVER SEAT HEATER MODULE	Unrestricted	DRIVER SEAT HEATER MODULE	1012077-00-A	2	
18	PASSENGER SEAT HEATER MODULE	Unrestricted	PASSENGER SEAT HEATER MODULE	1030458-00-A	1	
19	SLIDE MOTOR BRKT LH	Unrestricted	SLIDE MOTOR BRACKET LEFT	NA	1	Only available with front seat structure.
20	SLIDE MOTOR BRKT RH	Unrestricted	SLIDE MOTOR BRACKET RIGHT	NA	1	Only available with front seat structure.
21	Bracket - Seat Memory Module	Unrestricted	SEAT MEMORY MODULE BRACKET	1016674-00-A	1	
23	Housing - Seat Gearbox	Unrestricted	HOUSING - SEAT GEARBOX	1016675-00-A	4	
25	PUDDLE LAMP	Unrestricted	PUDDLE LAMP	1007151-00-D	2	
26	UNDER SEAT LAMP BRKT	Unrestricted	UNDER SEAT LAMP BRACKET	1016677-00-A	2	
*	BLT,BFLG,TRX,M10x28.4[10.9]-SM-NP-08	Unrestricted	BOLT, TORX, M10x28.4	1022449-00-A	4	For inboard side rail. Order in quantities of 25; minimum order: 25.
*	BLT,BFLG,TRX,M8x27.0[10.9]-M-NP-08	Unrestricted	BOLT, TORX, M8x27.0	1022448-00-A	4	For outboard side rail.
*	SPRING, FR SEAT TILT ASSIST	Unrestricted	SPRING, FRONT SEAT TILT ASSIST	NA	4	Only available with front seat structure.
*	BRACKET, CONNNECTOR, FRONT SEATS, MAIN	Unrestricted	BRACKET, CONNNECTOR, FRONT SEATS, MAIN	NA	3	Only available with front seat structure.
*	FRNT SEAT LH/RH BACK FRAME W/ RECLINERS	Unrestricted	FRONT SEAT LEFT/RIGHT BACK FRAME WITH RECLINERS - FOR NCAP" REGIONS ONLY"	NA	2	Only available with front seat structure.
*	FRNT SEAT LH/RH BACK PANEL	Unrestricted	FRONT SEAT LEFT/RIGHT BACK PANEL	1025651-00-B	2	
*	DIA 6MM FIR TREE CLIP	Unrestricted	FIR TREE CLIP - 6MM DIAMETER	1033934-00-A	8	Use to secure front seat back panel to seat frame.
*	MS/MX Front seat Memory Seat Module	Unrestricted	MS/MX Front seat Memory Seat Module	1072740-00-A	1	Use only with X into S seats

1304 - Front Seat Assemblies and Hardware

Front Seat Assemblies - Base Trim

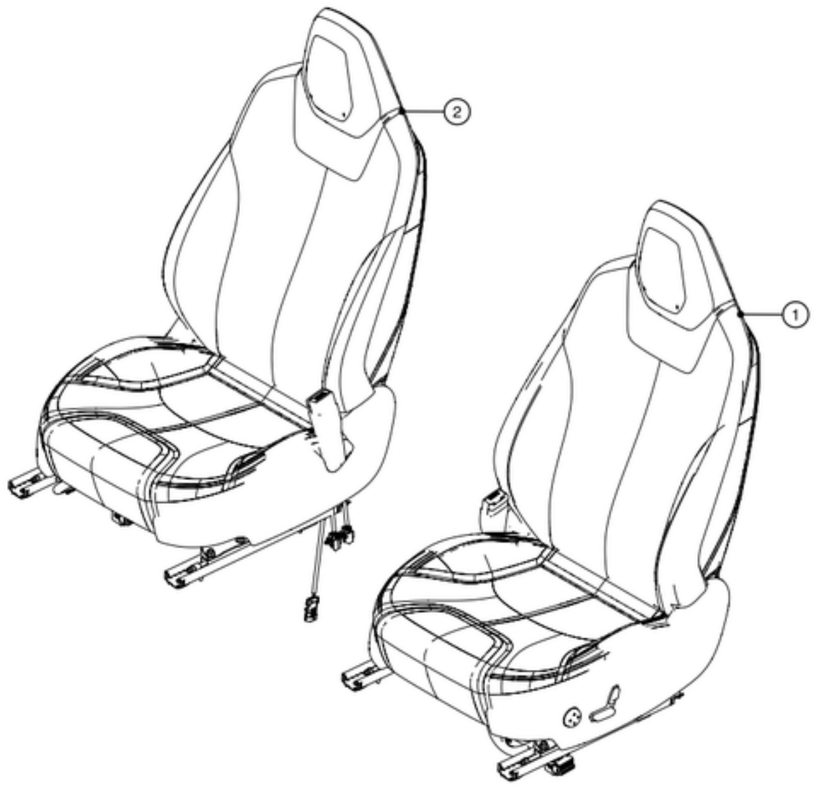

No	Part Name	Category	Part Description	Part Number	Qty	Comments
1	ASY, FRONT SEAT - BASE BLACK LH	Unrestricted	ASSEMBLY - SEAT FRONT BASE BLACK LH - ALL REGIONS	1005961-01-E	1	
1	ASY, FRONT DR. SEAT - BASE BLACK LHD LH NON-MEMORY	Unrestricted	ASSEMBLY - SEAT FRONT BASE BLACK LEFT - FOR "NCAP" REGIONS ONLY	1042776-01-B	1	
2	ASY, FRONT SEAT - BASE BLACK RH	Unrestricted	ASSEMBLY - SEAT FRONT BASE BLACK RIGHT	1005962-01-E	1	
*	BOLT TORX MPT LK M10X1.5 PC10.9 PO	Unrestricted	MARRIAGE BOLTS - FRONT SEAT ASSEMBLIES	1067387-00-B	8	For attaching the front seat back to the front seat bottom. 4 per seat.

Front Seat Assemblies - Tesla X into S PUR Trim (After August 2017)

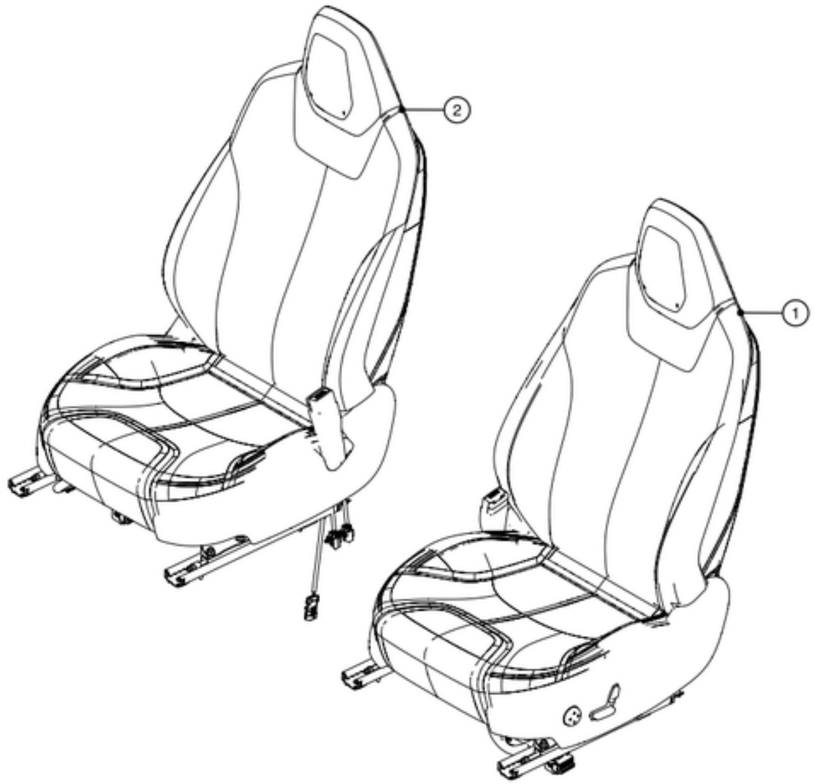

No	Part Name	Category	Part Description	Part Number	Qty	Comments
1	US MS LHD 1R LH SEAT ASY BASE BLK	Unrestricted	US - MODEL S - LEFT HAND DRIVE - FRONT ROW - DRIVER - SEAT ASSEMBLY - BASE - BLACK Black button black buckle - Black bezels - Deleting bib line on seat back trim	9876540-00-A	1	For vehicles produced on and after August 25th, 2017.
1	US MS LHD 1R LH SEAT ASY PUR WHT	Unrestricted	US - MODEL S - LEFT HAND DRIVE - FRONT ROW - DRIVER - SEAT ASSEMBLY - PUR - WHITE Black button black buckle - Black bezels - Deleting bib line on seat back trim	9876540-01-A	1	For vehicles produced on and after August 25th, 2017.
1	US MS LHD 1R LH SEAT ASY PUR BLK	Unrestricted	US - MODEL S - LEFT HAND DRIVE - FRONT ROW - DRIVER - SEAT ASSEMBLY - PUR - BLACK Black button black buckle - Black bezels - Deleting bib line on seat back trim	9876540-02-A	1	For vehicles produced on and after August 18th, 2017.
1	US MS LHD 1R LH SEAT ASY PUR CRM	Unrestricted	US - MODEL S - LEFT HAND DRIVE - FRONT ROW - DRIVER - SEAT ASSEMBLY - PUR - CREAM Black button black buckle - Black bezels - Deleting bib line on seat back trim	9876540-03-A	1	For vehicles produced on and after August 18th, 2017.
2	US MS LHD 1R RH SEAT ASY BASE BLK	Unrestricted	US - MODEL S - LEFT HAND DRIVE - FRONT ROW - PASSENGER - SEAT ASSEMBLY - BASE - BLACK Black button black buckle - Black bezels - Deleting bib line on seat back trim	9876536-00-A	1	For vehicles produced on and after August 25th, 2017.
2	US MS LHD 1R RH SEAT ASY PUR WHT	Unrestricted	US - MODEL S - LEFT HAND DRIVE - FRONT ROW - PASSENGER - SEAT ASSEMBLY - PUR - WHITE Black button black buckle - Black bezels - Deleting bib line on seat back trim	9876536-01-A	1	For vehicles produced on and after August 25th, 2017.
2	US MS LHD 1R RH SEAT ASY PUR BLK	Unrestricted	US - MODEL S - LEFT HAND DRIVE - FRONT ROW - PASSENGER - SEAT ASSEMBLY - PUR - BLACK Black button black buckle - Black bezels - Deleting bib line on seat back trim	9876536-02-A	1	For vehicles produced on and after August 18th, 2017.

2	US MS LHD 1R RH SEAT ASY PUR CRM	Unrestricted	US - MODEL S - LEFT HAND DRIVE - FRONT ROW - PASSENGER - SEAT ASSEMBLY - PUR - CREAM Black button black buckle - Black bezels - Deleting bib line on seat back trim	9876536-03-A	1	For vehicles produced on and after August 18th, 2017.

Front Seat Assemblies - Tesla X into S Trim (Until August 2017)

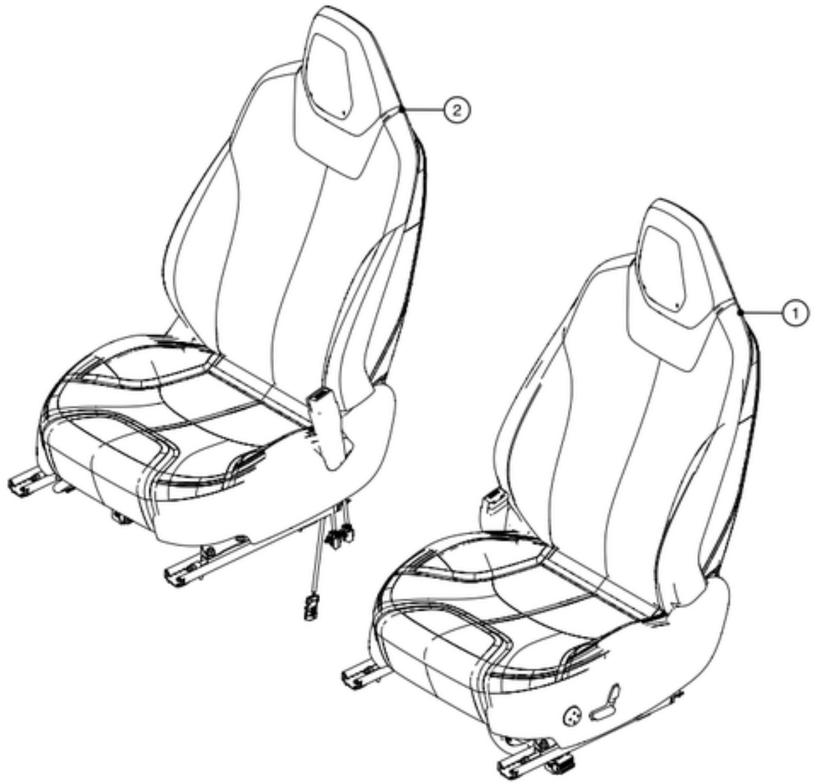

No	Part Name	Category	Part Description	Part Number	Qty	Comments
1	FRONT SEAT ASSY X ON S LHD LEFT BASE CLOTH - NA	Unrestricted	USA - ASSEMBLY, FRONT DRIVER SEAT - X ON S SEATS LEFT HAND DRIVE LEFT - BASE CLOTH	1105947-00-B	1	For vehicles produced until August 25th, 2017.
1	FRONT SEAT ASSY XST LHD LEFT PREM WHITE - NA	Unrestricted	USA - ASSEMBLY, FRONT DRIVER SEAT - X ON S SEATS LEFT HAND DRIVE LEFT - PREMIUM WHITE	1105947-01-B	1	For vehicles produced until August 25th, 2017.
1	FRONT SEAT ASSY XST LHD LEFT PREM BLACK - NA	Unrestricted	USA - ASSEMBLY, FRONT DRIVER SEAT - X ON S SEATS LEFT HAND DRIVE LEFT - PREMIUM BLACK	1105947-02-B	1	For vehicles produced until August 18th, 2017.
1	FRONT SEAT ASSY XST LHD LEFT PREM TAN - NA	Unrestricted	USA - ASSEMBLY, FRONT DRIVER SEAT - X ON S SEATS LEFT HAND DRIVE LEFT - PREMIUM TAN	1105947-03-B	1	For vehicles produced until August 18th, 2017.
1	FRONT SEAT ASSY XST LHD LEFT LUXURY WHITE - NA	Unrestricted	USA - ASSEMBLY, FRONT DRIVER SEAT - X ON S SEATS LEFT HAND DRIVE LEFT - LUXURY WHITE	1105947-04-B	1	For vehicles produced until August 18th, 2017.
1	FRONT SEAT ASSY XST LHD LEFT LUXURY BLACK - NA	Unrestricted	USA - ASSEMBLY, FRONT DRIVER SEAT - X ON S SEATS LEFT HAND DRIVE LEFT - LUXURY BLACK	1105947-05-B	1	For vehicles produced until August 18th, 2017.
1	FRONT SEAT ASSY XST LHD LEFT LUXURY TAN - NA	Unrestricted	USA - ASSEMBLY, FRONT DRIVER SEAT - X ON S SEATS LEFT HAND DRIVE LEFT - LUXURY TAN	1105947-06-B	1	For vehicles produced until August 18th, 2017.
2	PASSENGER SEAT ASSY X ON S LHD RIGHT BASE CLOTH - NA	Unrestricted	USA - ASSEMBLY, FRONT PASSENGER SEAT - X ON S SEATS LEFT HAND DRIVE RIGHT - BASE CLOTH	1105949-00-B	1	For vehicles produced until August 25th, 2017.
2	PASSENGER SEAT ASSY XST LHD RIGHT PREM WHITE - NA	Unrestricted	USA - ASSEMBLY, FRONT PASSENGER SEAT - X ON S SEATS LEFT HAND DRIVE RIGHT - PREMIUM WHITE	1105949-01-B	1	For vehicles produced until August 25th, 2017.
2	PASSENGER SEAT ASSY XST LHD RIGHT PREM BLACK - NA	Unrestricted	USA - ASSEMBLY, FRONT PASSENGER SEAT - X ON S SEATS LEFT HAND DRIVE RIGHT - PREMIUM BLACK	1105949-02-B	1	For vehicles produced until August 18th, 2017.
2	PASSENGER SEAT ASSY XST LHD RIGHT PREM TAN - NA	Unrestricted	USA - ASSEMBLY, FRONT PASSENGER SEAT - X ON S SEATS LEFT HAND DRIVE RIGHT - PREMIUM TAN	1105949-03-B	1	For vehicles produced until August 18th, 2017.
2	PASSENGER SEAT ASSY XST LHD RIGHT LUXURY WHITE - NA	Unrestricted	USA - ASSEMBLY, FRONT PASSENGER SEAT - X ON S SEATS LEFT HAND DRIVE RIGHT - LUXURY WHITE	1105949-04-B	1	For vehicles produced until August 18th, 2017.
2	PASSENGER SEAT ASSY XST LHD RIGHT LUXURY BLACK - NA	Unrestricted	USA - ASSEMBLY, FRONT PASSENGER SEAT - X ON S SEATS LEFT HAND DRIVE RIGHT - LUXURY BLACK	1105949-05-B	1	For vehicles produced until August 18th, 2017.

2	PASSENGER SEAT ASSY XST LHD RIGHT LUXURY TAN - NA	Unrestricted	USA - ASSEMBLY, FRONT PASSENGER SEAT - X ONS SEATS LEFT HAND DRIVE RIGHT - LUXURY TAN	1105949-06-B	1	For vehicles produced until August 18th, 2017.

1305 - 2nd Row Seat Assemblies and Hardware

2nd Row Seat Assemblies - Base Trim

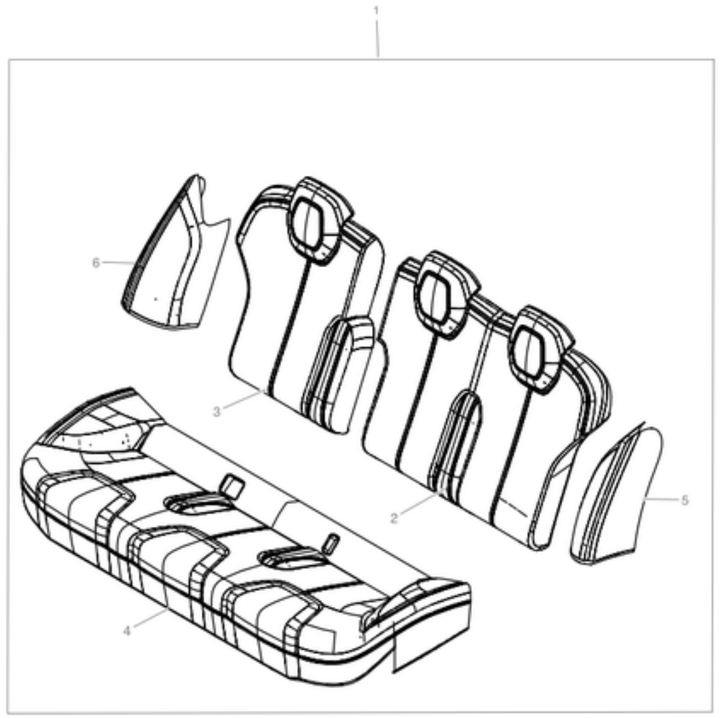

No	Part Name	Category	Part Description	Part Number	Qty	Comments
2	SEAT BACK ASY - BASE BLACK 60/LH	Unrestricted	ASSEMBLY, SEAT BACK 2ND ROW 60% BASE BLACK LEFT - FOR NCAP" REGIONS ONLY"	1005963-01-B	1	USA only
2	SEAT BACK ASY - BASE BLACK 60/LH, 3ROW	Unrestricted	ASSEMBLY, SEAT BACK 2ND ROW 60% BASE BLACK LEFT WITH 3RD ROW SEATS - FOR NCAP" REGIONS ONLY"	1017019-01-B	1	USA only
2	CA - SEAT BACK ASY - BASE BLACK 60/LH	Unrestricted	CANADA - ASSEMBLY, SEAT BACK 2ND ROW 60% BASE BLACK LEFT - FOR NCAP" REGIONS ONLY"	1020532-01-B	1	Canada only
2	CA - SEAT BACK ASY - BASE BLACK 60/LH 3R	Unrestricted	CANADA - ASSEMBLY, SEAT BACK 2ND ROW 60% BASE BLACK LEFT WITH 3RD ROW SEATS - FOR NCAP" REGIONS ONLY"	1020535-01-B	1	Canada only
2	US REAR SEAT BACK ASY - BASE BLACK 60/LH - WITH HEATERS	Unrestricted	ASSEMBLY, SEAT BACK 2ND ROW 60% BASE BLACK LEFT WITH HEATERS - FOR NCAP" REGIONS ONLY"	1030472-01-B	1	USA only
2	US REAR SEAT BACK ASY - BASE BLACK 60/LH 3RD ROW - WITH HEATERS	Unrestricted	ASSEMBLY, SEAT BACK 2ND ROW 60% BASE BLACK LEFT WITH 3RD ROW AND HEATERS - FOR NCAP" REGIONS ONLY"	1030475-01-B	1	USA only
2	CA/EU REAR SEAT BACK ASY - BASE BLACK 60/LH - WITH HEATERS	Unrestricted	CANADA/EUROPE - ASSEMBLY, SEAT BACK 2ND ROW 60% BASE BLACK LEFT WITH HEATERS - FOR NCAP" REGIONS ONLY"	1030531-01-B	1	Canada only
2	CA/EU REAR SEAT BACK ASY - BASE BLACK 60/LH 3RD ROW - WITH HEATERS	Unrestricted	CANADA/EUROPE - ASSEMBLY, SEAT BACK 2ND ROW 60% BASE BLACK LEFT WITH 3RD ROW AND HEATERS	1030533-01-A	1	Canada only
2	CA/EU REAR SEAT BACK ASY - BASE BLACK 60/LH 3RD ROW - WITH HEATERS	Unrestricted	CANADA/EUROPE - ASSEMBLY, SEAT BACK 2ND ROW 60% BASE BLACK LEFT WITH 3RD ROW AND HEATERS - FOR NCAP" REGIONS ONLY"	1030533-01-B	1	Canada only
3	SEAT BACK ASY - BASE BLACK 40/RH	Unrestricted	ASSEMBLY, SEAT BACK 2ND ROW 40% BASE BLACK RIGHT - FOR NCAP" REGIONS ONLY"	1005964-01-B	1	USA only
3	US REAR SEAT BACK ASY - BASE BLACK 40/RH - WITH HEATERS	Unrestricted	ASSEMBLY, SEAT BACK 2ND ROW 40% BASE BLACK RIGHT WITH HEATER - FOR NCAP" REGIONS ONLY"	1030476-01-B	1	USA only

3	CA - SEAT BACK ASY - BASE BLACK 40/RH	Unrestricted	CANADA - ASSEMBLY, SEAT BACK 2ND ROW 40% BASE BLACK RIGHT - FOR NCAP" REGIONS ONLY"	1020533-01-B	1	Canada only
3	CA/EU REAR SEAT BACK ASY - BASE BLACK 40/RH - WITH HEATERS	Unrestricted	CANADA/EUROPE - ASSEMBLY, SEAT BACK 2ND ROW 40% BASE BLACK RIGHT WITH HEATER - FOR NCAP" REGIONS ONLY"	1030535-01-B	1	Canada only
3	CA/EU REAR SEAT BACK ASY - BASE BLACK 40/RH - WITH HEATERS	Unrestricted	CANADA/EUROPE - ASSEMBLY, SEAT BACK 2ND ROW 40% BASE BLACK RIGHT WITH HEATER - FOR NCAP" REGIONS ONLY"	1030535-01-B	1	
4	SEAT CUSHION ASY - BASE BLACK	Unrestricted	ASSEMBLY, SEAT CUSHION - BASE BLACK	1008276-01-A	1	
4	US/CA/EU REAR SEAT CUSHION ASY - BASE BLACK - WITH HEATERS	Unrestricted	ASSEMBLY, SEAT CUSHION - BASE BLACK WITH HEATER	1030569-01-A	1	
5	ASY BOLSTER SEAT 2nd ROW BASE BLK LH	Unrestricted	ASSEMBLY SEAT BOLSTER 2ND ROW BASE BLACK LEFT	1005970-01-A	1	
6	ASY BOLSTER SEAT 2nd ROW BASE BLK RH	Unrestricted	ASSEMBLY SEAT BOLSTER 2ND ROW BASE BLACK RIGHT	1005971-01-A	1	
*	Rear Center Heater Module	Unrestricted	REAR CENTER HEATER MODULE	1030459-00-A	1	
*	Rear Heater Patch Harness	Unrestricted	REAR HEATER PATCH HARNESS	1030460-00-A	1	
*	Rear 60% LH Back Heater Mat	Unrestricted	REAR 60% LEFT BACK HEATER MAT - FOR NCAP" REGIONS ONLY"	1030461-00-B	1	
*	Rear 60% Center Back Heater Mat	Unrestricted	REAR 60% CENTER BACK HEATER MAT - FOR NCAP" REGIONS ONLY"	1030462-00-B	1	
*	Rear 40% RH Back Heater Mat	Unrestricted	REAR 40% RIGHT BACK HEATER MAT - FOR NCAP" REGIONS ONLY"	1030463-00-B	1	
*	SEAT BELT REMINDER (SBR) - 2ND ROW	Unrestricted	SEAT BELT REMINDER - 2ND ROW	1005778-00-B	3	
*	2nd Row SBR Patch Harness	Unrestricted	SEAT BELT REMINDER PATCH HARNESS - 2ND ROW	1031360-00-A	1	

2nd Row Seat Assemblies - Comfort Design - PUR Trim (After August 18th, 2017)

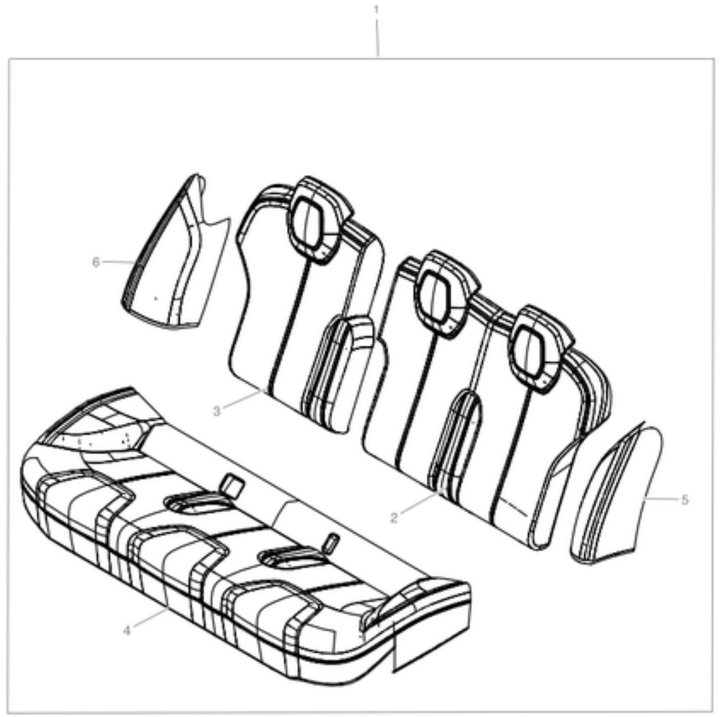

No	Part Name	Category	Part Description	Part Number	Qty	Comments
3	NA MS 2R RH SEAT 40 RSB BASE BLK	Unrestricted	NA - MODEL S - 2ND ROW - RIGHT - SEAT - 40% REAR SEAT BACK - BASE - BLACK New design for comfort improvement	9876534-00-A	1	For vehicles produced on and after August 18th, 2017.
3	NA MS 2R RH SEAT 40 RSB PUR WHT	Unrestricted	NA - MODEL S - 2ND ROW - RIGHT - SEAT - 40% REAR SEAT BACK - PUR - WHITE New design for comfort improvement	9876534-01-A	1	For vehicles produced on and after August 18th, 2017.
3	NA MS 2R RH SEAT 40 RSB PUR BLK	Unrestricted	NA - MODEL S - 2ND ROW - RIGHT - SEAT - 40% REAR SEAT BACK - PUR - BLACK New design for comfort improvement	9876534-02-A	1	For vehicles produced on and after August 18th, 2017.
3	NA MS 2R RH SEAT 40 RSB PUR CRM	Unrestricted	NA - MODEL S - 2ND ROW - RIGHT - SEAT - 40% REAR SEAT BACK - PUR - CREAM New design for comfort improvement	9876534-03-A	1	For vehicles produced on and after August 18th, 2017.
2	NA MS 2R LH SEAT 60 RSB BASE BLK	Unrestricted	NA - MODEL S - 2ND ROW - LEFT - SEAT - 60% REAR SEAT BACK - BASE - BLACK New design for comfort improvement	9876532-00-A	1	For vehicles produced on and after August 18th, 2017.
2	NA MS 2R LH SEAT 60 RSB PUR WHT	Unrestricted	NA - MODEL S - 2ND ROW - LEFT - SEAT - 60% REAR SEAT BACK - PUR - WHITE New design for comfort improvement	9876532-01-A	1	For vehicles produced on and after August 18th, 2017.
2	NA MS 2R LH SEAT 60 RSB PUR BLK	Unrestricted	NA - MODEL S - 2ND ROW - LEFT - SEAT - 60% REAR SEAT BACK - PUR - BLACK New design for comfort improvement	9876532-02-A	1	For vehicles produced on and after August 18th, 2017.
2	NA MS 2R LH SEAT 60 RSB PUR CRM	Unrestricted	NA - MODEL S - 2ND ROW - LEFT - SEAT - 60% REAR SEAT BACK - PUR - CREAM New design for comfort improvement	9876532-03-A	1	For vehicles produced on and after August 18th, 2017.
4	ALL REGIONS MS 2R RSC SEAT RSC BASE BLK	Unrestricted	ALL REGIONS - MODEL S - 2ND ROW - REAR SEAT CUSHION - BASE - BLACK New design for comfort improvement	9876531-00-A	1	For vehicles produced on and after August 18th, 2017.
4	ALL REGIONS MS 2R RSC SEAT RSC PUR WHT	Unrestricted	ALL REGIONS - MODEL S - 2ND ROW - REAR SEAT CUSHION - PUR - WHITE New design for comfort improvement	9876531-01-A	1	For vehicles produced on and after August 18th, 2017.

4	ALL REGIONS MS 2R RSC SEAT RSC PUR BLK	Unrestricted	ALL REGIONS - MODEL S - 2ND ROW - REAR SEAT CUSHION - PUR - BLACK New design for comfort improvement	9876531-02-A	1	For vehicles produced on and after August 18th, 2017.
4	ALL REGIONS MS 2R RSC SEAT RSC PUR CRM	Unrestricted	ALL REGIONS - MODEL S - 2ND ROW - REAR SEAT CUSHION - PUR - CREAM New design for comfort improvement	9876531-03-A	1	For vehicles produced on and after August 18th, 2017.
5	MS LH BOLSTER ASY PUR BLACK	Unrestricted	MODEL S - LEFT - BOLSTER ASSEMBLY - PUR - BLACK	1452634-02-A	1	
5	MS LH BOLSTER ASY PUR CREAM	Unrestricted	MODEL S - LEFT - BOLSTER ASSEMBLY - PUR - CREAM	1452634-03-A	1	
6	MS RH BOLSTER ASY PUR BLACK	Unrestricted	MODEL S - RIGHT - BOLSTER ASSEMBLY - PUR - BLACK	1452734-02-A	1	
6	MS RH BOLSTER ASY PUR CREAM	Unrestricted	MODEL S - RIGHT - BOLSTER ASSEMBLY - PUR - CREAM	1452734-03-A	1	

2nd Row Seat Assemblies - Luxury Trim

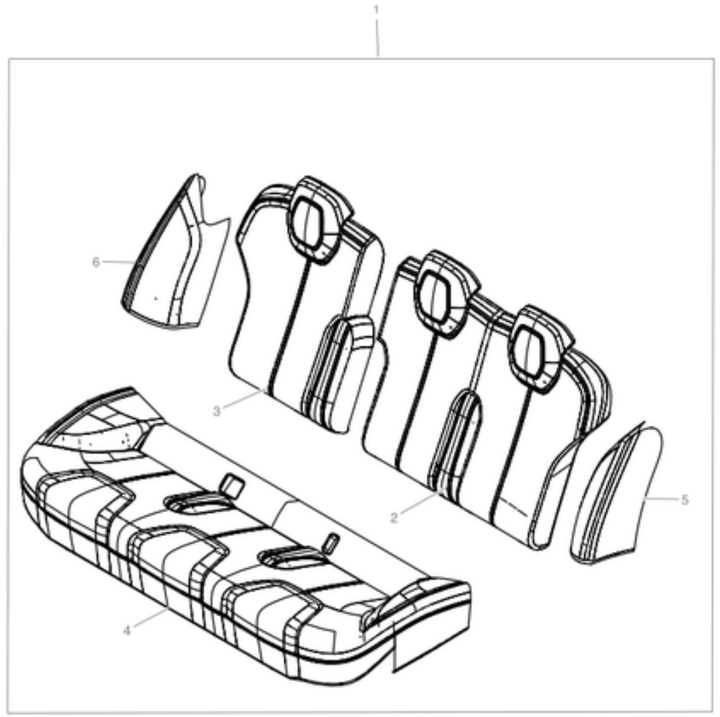

No	Part Name	Category	Part Description	Part Number	Qty	Comments
2	NA - SEAT BACK ASY 60 - LUXURY WHITE - HEAT	Unrestricted	NA - ASSEMBLY, SEAT BACK 2ND ROW 60% LUXURY WHITE, HEATED	1109731-01-A	1	
2	NA - SEAT BACK ASY 60- LUXURY BLACK - HEAT	Unrestricted	NA - ASSEMBLY, SEAT BACK 2ND ROW 60% LUXURY BLACK, HEATED	1109731-02-A	1	
2	NA - SEAT BACK ASY 60- LUXURY TAN - HEAT	Unrestricted	NA - ASSEMBLY, SEAT BACK 2ND ROW 60% LUXURY TAN, NON-HEATED	1109731-03-A	1	
2	NA - SEAT BACK ASY 60 - LUXURY WHITE - NO HEAT	Unrestricted	NA - ASSEMBLY, SEAT BACK 2ND ROW 60% LUXURY WHITE, NON-HEATED	1109731-04-A	1	
2	NA - SEAT BACK ASY 60- LUXURY BLACK - NO HEAT	Unrestricted	NA - ASSEMBLY, SEAT BACK 2ND ROW 60% LUXURY BLACK, NON-HEATED	1109731-05-A	1	
2	NA - SEAT BACK ASY 60- LUXURY TAN - NO HEAT	Unrestricted	NA - ASSEMBLY, SEAT BACK 2ND ROW 60% LUXURY TAN, NON-HEATED	1109731-06-A	1	
3	NA - SEAT BACK ASY 40- LUXURY WHITE - HEAT	Unrestricted	NA - ASSEMBLY, SEAT BACK 2ND ROW 40% LUXURY WHITE, HEATED	1109931-01-A	1	
3	NA - SEAT BACK ASY 40- LUXURY BLACK - HEAT	Unrestricted	NA - ASSEMBLY, SEAT BACK 2ND ROW 40% LUXURY BLACK, HEATED	1109931-02-A	1	
3	NA - SEAT BACK ASY 40- LUXURY TAN - HEAT	Unrestricted	NA - ASSEMBLY, SEAT BACK 2ND ROW 40% LUXURY TAN, HEATED	1109931-03-A	1	
3	NA - SEAT BACK ASY 40- LUXURY WHITE - NO HEAT	Unrestricted	NA - ASSEMBLY, SEAT BACK 2ND ROW 40% LUXURY WHITE, NON-HEATED	1109931-04-A	1	
3	NA - SEAT BACK ASY 40- LUXURY BLACK - NO HEAT	Unrestricted	NA - ASSEMBLY, SEAT BACK 2ND ROW 40% LUXURY BLACK, NON-HEATED	1109931-05-A	1	
3	NA - SEAT BACK ASY 40- LUXURY TAN - NO HEAT	Unrestricted	NA - ASSEMBLY, SEAT BACK 2ND ROW 40% LUXURY TAN, NON-HEATED	1109931-06-A	1	
4	SEAT CUSHION ASY - XST LUXURY WHITE - HEAT	Unrestricted	ASSEMBLY, SEAT CUSHION - LUXURY WHITE, HEATED	1109831-01-A	1	
4	SEAT CUSHION ASY - XST LUXURY BLACK - HEAT	Unrestricted	ASSEMBLY, SEAT CUSHION - LUXURY BLACK, HEATED	1109831-02-A	1	
4	SEAT CUSHION ASY - XST LUXURY TAN - HEAT	Unrestricted	ASSEMBLY, SEAT CUSHION - LUXURY TAN, HEATED	1109831-03-A	1	

5	ASY, BOLSTER - LUXURY WHITE LH	Unrestricted	ASY, BOLSTER - LUXURY WHITE LH	1115013-00-A	1	
5	ASY, BOLSTER - LUXURY BLACK LH	Unrestricted	ASY, BOLSTER - LUXURY BLACK LH	1115015-00-A	1	
5	ASY, BOLSTER - LUXURY TAN LH	Unrestricted	ASY, BOLSTER - LUXURY TAN LH	1115017-00-A	1	
6	ASY, BOLSTER - LUXURY WHITE RH	Unrestricted	ASY, BOLSTER - LUXURY WHITE RH	1115014-00-A	1	
6	ASY, BOLSTER - LUXURY BLACK RH	Unrestricted	ASY, BOLSTER - LUXURY BLACK RH	1115016-00-A	1	
6	ASY, BOLSTER - LUXURY TAN RH	Unrestricted	ASY, BOLSTER - LUXURY TAN RH	1115018-00-A	1	

2nd Row Seat Assemblies - Premium Trim

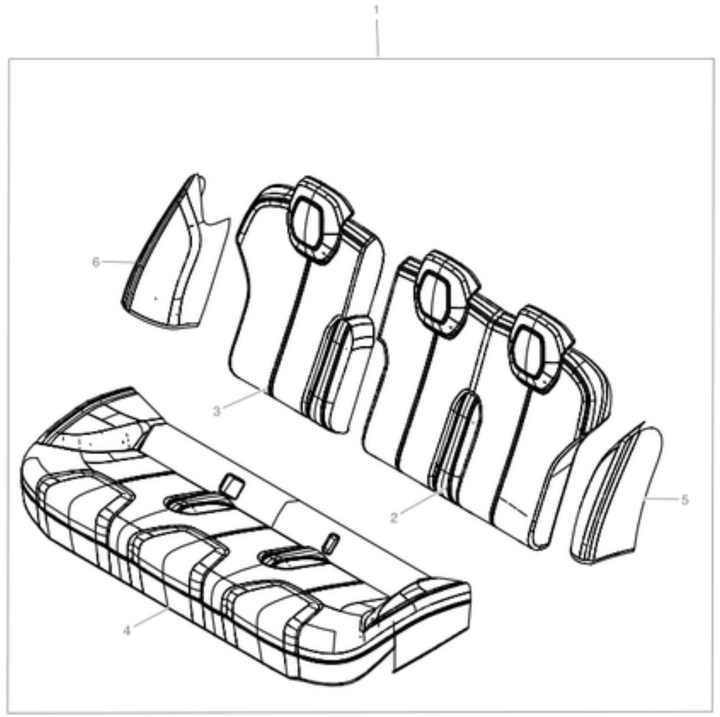

No	Part Name	Category	Part Description	Part Number	Qty	Comments
2	SEAT BACK ASY - PREM BLACK 60/LH	Unrestricted	ASSEMBLY, SEAT BACK 2ND ROW 60% PREMIUM BLACK LEFT - FOR NCAP" REGIONS ONLY"	1006374-01-B	1	USA only
2	SEAT BACK ASY - PREM TAN 60/LH	Unrestricted	ASSEMBLY, SEAT BACK 2ND ROW 60% PREMIUM TAN LEFT - FOR NCAP" REGIONS ONLY"	1006374-03-B	1	USA only
2	SEAT BACK ASY - PREM GRAY 60/LH	Unrestricted	ASSEMBLY, SEAT BACK 2ND ROW 60% PREMIUM GRAY LEFT - FOR NCAP" REGIONS ONLY"	1006374-04-B	1	USA only
2	US REAR SEAT BACK ASY - PREMIUM BLACK 60/LH - WITH HEATERS	Unrestricted	ASSEMBLY, SEAT BACK 2ND ROW 60% PREMIUM BLACK LEFT WITH HEATER - FOR NCAP" REGIONS ONLY"	1030477-01-B	1	USA only
2	NA REAR SEAT BACK ASY - PREMIUM WHITE 60/LH - WITH HEATERS	Unrestricted	ASSEMBLY, SEAT BACK 2ND ROW 60% PREMIUM WHITE LEFT WITH HEATER - FOR NCAP" REGIONS ONLY"	2628291-02-A	1	
2	US REAR SEAT BACK ASY - PREMIUM TAN 60/LH - WITH HEATERS	Unrestricted	ASSEMBLY, SEAT BACK 2ND ROW 60% PREMIUM TAN LEFT WITH HEATER - FOR NCAP" REGIONS ONLY"	1030477-03-B	1	USA only
2	US REAR SEAT BACK ASY - PREMIUM GRAY 60/LH - WITH HEATERS	Unrestricted	ASSEMBLY, SEAT BACK 2ND ROW 60% PREMIUM GRAY LEFT WITH HEATER - FOR NCAP" REGIONS ONLY"	1030477-04-B	1	USA only
3	ASY - SEAT BACK 2nd ROW 40 PREMIUM BLK RH	Unrestricted	ASSEMBLY, SEAT BACK 2ND ROW 40% PREMIUM BLACK RIGHT - FOR NCAP" REGIONS ONLY"	1006375-01-B	1	USA only
3	ASY - SEAT BACK 2nd ROW 40 PREMIUM TAN RH	Unrestricted	ASSEMBLY, SEAT BACK 2ND ROW 40% PREMIUM TAN RIGHT - FOR NCAP" REGIONS ONLY"	1006375-03-B	1	USA only
3	ASY - SEAT BACK 2ND ROW 40 PREMIUM GRY RH	Unrestricted	ASSEMBLY, SEAT BACK 2ND ROW 40% PREMIUM GRAY RIGHT - FOR NCAP" REGIONS ONLY"	1006375-04-B	1	USA only
3	US REAR SEAT BACK ASY - PREMIUM BLACK 40/RH - WITH HEATERS	Unrestricted	ASSEMBLY, SEAT BACK 2ND ROW 40% PREMIUM BLACK RIGHT WITH HEATER - FOR NCAP" REGIONS ONLY"	1030480-01-B	1	USA only
3	US REAR SEAT BACK ASY - PREMIUM WHITE 40/RH - WITH HEATERS	Unrestricted	ASSEMBLY, SEAT BACK 2ND ROW 40% PREMIUM WHITE RIGHT WITH HEATER - FOR NCAP" REGIONS ONLY"	2628293-02-A	1	USA only

3	US REAR SEAT BACK ASY - PREMIUM TAN 40/RH - WITH HEATERS	Unrestricted	ASSEMBLY, SEAT BACK 2ND ROW 40% PREMIUM TAN RIGHT WITH HEATER - FOR NCAP" REGIONS ONLY"	1030480-03-B	1	USA only
3	US REAR SEAT BACK ASY - PREMIUM GRAY 40/RH - WITH HEATERS	Unrestricted	ASSEMBLY, SEAT BACK 2ND ROW 40% PREMIUM GRAY RIGHT WITH HEATER - FOR NCAP" REGIONS ONLY"	1030480-04-B	1	USA only
4	SEAT CUSHION ASY - PREM BLK	Unrestricted	ASSEMBLY, SEAT CUSHION - PREMIUM BLACK	1008375-01-A	1	
4	SEAT CUSHION ASY - PREM TAN	Unrestricted	ASSEMBLY, SEAT CUSHION - PREMIUM TAN	1008375-03-A	1	
4	SEAT CUSHION ASY - PREM GRY	Unrestricted	ASSEMBLY, SEAT CUSHION - PREMIUM GRAY	1008375-04-A	1	
4	US/CA/EU REAR SEAT CUSHION ASY - PREMIUM BLACK - WITH HEATERS	Unrestricted	ASSEMBLY, SEAT CUSHION - PREMIUM BLACK WITH HEATER	1030570-01-A	1	
4	US/CA/EU REAR SEAT CUSHION ASY - PREMIUM WHITE - WITH HEATERS	Unrestricted	ASSEMBLY, SEAT CUSHION - PREMIUM WHITE WITH HEATER	2628294-02-A	1	
4	US/CA/EU REAR SEAT CUSHION ASY - PREMIUM TAN - WITH HEATERS	Unrestricted	ASSEMBLY, SEAT CUSHION - PREMIUM TAN WITH HEATER	1030570-03-A	1	
4	US/CA/EU REAR SEAT CUSHION ASY - PREMIUM GRAY - WITH HEATERS	Unrestricted	ASSEMBLY, SEAT CUSHION - PREMIUM GRAY WITH HEATER	1030570-04-A	1	
5	ASY, BOLSTER - PREM BLACK LH	Unrestricted	ASSEMBLY BOLSTER SEAT 2ND ROW PREMIUM BLACK LEFT	1006402-01-A	1	
5	ASY, BOLSTER - PREM WHITE LH	Unrestricted	ASSEMBLY BOLSTER SEAT 2ND ROW PREMIUM WHITE LEFT	1115011-00-A	1	
5	ASY, BOLSTER - PREM TAN LH	Unrestricted	ASSEMBLY BOLSTER SEAT 2ND ROW PREMIUM TAN LEFT	1006402-03-A	1	
5	ASY, BOLSTER - PREM GRAY LH	Unrestricted	ASSEMBLY BOLSTER SEAT 2ND ROW PREMIUM GRAY LEFT	1006402-04-A	1	
6	ASY, BOLSTER - PREM BLACK RH	Unrestricted	ASSEMBLY BOLSTER SEAT 2ND ROW PREMIUM BLACK RIGHT	1006426-01-A	1	
6	ASY, BOLSTER - PREM WHITE RH	Unrestricted	ASSEMBLY BOLSTER SEAT 2ND ROW PREMIUM WHITE RIGHT	1115012-00-A	1	
6	ASY, BOLSTER - PREM TAN RH	Unrestricted	ASSEMBLY BOLSTER SEAT 2ND ROW PREMIUM TAN RIGHT	1006426-03-A	1	
6	ASY, BOLSTER - PREM GRAY RH	Unrestricted	ASSEMBLY BOLSTER SEAT 2ND ROW PREMIUM GRAY RIGHT	1006426-04-A	1	
*	SEAT BELT REMINDER (SBR) - 2ND ROW	Unrestricted	SEAT BELT REMINDER - 2ND ROW	1005778-00-B	3	
*	Rear Center Heater Module	Unrestricted	REAR CENTER HEATER MODULE	1030459-00-A	1	
*	Rear Heater Patch Harness	Unrestricted	REAR HEATER PATCH HARNESS	1030460-00-A	1	
*	Rear 60% LH Back Heater Mat	Unrestricted	REAR 60% LEFT BACK HEATER MAT - FOR NCAP" REGIONS ONLY"	1030461-00-B	1	
*	Rear 60% Center Back Heater Mat	Unrestricted	REAR 60% CENTER BACK HEATER MAT - FOR NCAP" REGIONS ONLY"	1030462-00-B	1	
*	Rear 40% RH Back Heater Mat	Unrestricted	REAR 40% RIGHT BACK HEATER MAT - FOR NCAP" REGIONS ONLY"	1030463-00-B	1	
*	2nd Row SBR Patch Harness	Unrestricted	SEAT BELT REMINDER PATCH HARNESS - 2ND ROW	1031360-00-A	1	

2nd Row Seat Frame

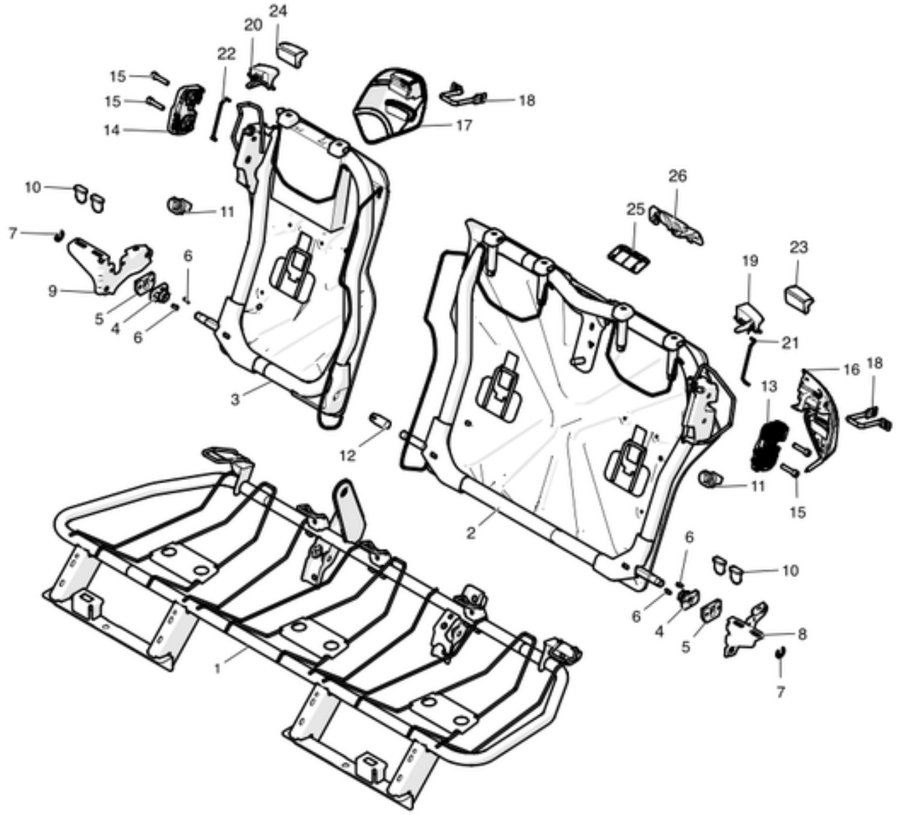

No	Part Name	Category	Part Description	Part Number	Qty	Comments
1	ASY - CUSHION STRUCTURE 2nd SEAT	Unrestricted	ASSEMBLY - CUSHION STRUCTURE 2nd ROW SEAT		1	Please order complete cushion trim
2	SEAT BACK FRAME ASSEMBLY 60% SIDE LH	Unrestricted	ASSEMBLY - FRAME SEAT BACK 60% LEFT - FOR NCAP" REGIONS ONLY"		1	Please order complete 60 back trim
3	FRAME SEAT BACK ASSEMBLY 40 RH	Unrestricted	ASSEMBLY - FRAME SEAT BACK 40% RIGHT - FOR NCAP" REGIONS ONLY"		1	Please order complete 40 back trim
4	2nd Row Seat Back Pivot Lock	Unrestricted	2ND ROW SEAT BACK PIVOT LOCK	1016815-00-A	2	
5	2nd Row Seat Back Pivot Lock Bracket	Unrestricted	2ND ROW SEAT BACK PIVOT LOCK BRACKET	1016816-00-A	2	
6	2nd Row Seat Back Pivot Lock Fixing	Unrestricted	2ND ROW SEAT BACK PIVOT LOCK FIXING	1016817-00-A	4	
7	Circlip	Unrestricted	CIRCLIP	1016818-00-A	2	
8	BRACKET 2nd SEAT BACK PIVOT LH	Unrestricted	BRACKET 2ND ROW SEAT BACK PIVOT LEFT	1006862-00-B	1	
8	EU - BRKT 2nd SEAT BACK PIVOT LH	Unrestricted	EUROPE - BRACKET 2ND ROW SEAT BACK PIVOT LEFT	1021371-00-A	1	
9	BRKT 2nd SEAT BACK PIVOT RH	Unrestricted	BRACKET 2ND ROW SEAT BACK PIVOT RIGHT	1006863-00-B	1	
9	EU - BRKT 2nd SEAT BACK PIVOT RH	Unrestricted	EUROPE - BRACKET 2ND ROW SEAT BACK PIVOT RIGHT	1021372-00-A	1	
10	SEAT BACK GROMMET - SMALL	Unrestricted	SEAT BACK GROMMET, SMALL	1016823-00-A	4	
11	SEAT BACK GROMMET - LARGE	Unrestricted	SEAT BACK GROMMET, LARGE	1016824-00-A	4	Order in quantities of 50; minimum order: 50.
12	PIVOT SLEEVE FOR 60% LH SIDE	Unrestricted	PIVOT SLEEVE	1013151-00-A	1	
13	LATCH 60 LH	Unrestricted	LATCH 60% LEFT	1013165-00-A	1	
14	LATCH 40 RH	Unrestricted	LATCH 40% RIGHT	1013177-00-A	1	
15	LATCH BOLT	Unrestricted	LATCH BOLT	1013166-00-A	4	

16	LATCH COVER 60 LH	Unrestricted	LATCH COVER 60% LEFT	1013158-00-A	1	
17	LATCH COVER 40 RH	Unrestricted	LATCH COVER 40% RIGHT	1013171-00-A	1	
18	STRIKER SEAT SECOND ROW	Unrestricted	STRIKER SEAT 2ND ROW	1005974-00-B	2	
19	LATCH RELEASE 60 LH	Unrestricted	LATCH RELEASE 60% LEFT	1013160-00-A	1	
20	LATCH RELEASE 40 RH	Unrestricted	LATCH RELEASE 40% RIGHT	1013173-00-A	1	
21	PUSH ROD 60 LH	Unrestricted	PUSH ROD 60% LEFT	1013161-00-A	1	
22	PUSH ROD 40 RH	Unrestricted	PUSH ROD 40% RIGHT	1013174-00-A	1	
23	Latch Release Escutsheon LH	Unrestricted	LATCH RELEASE LEFT	1016820-00-A	1	
*	LATCH RELEASE SCREW	Unrestricted	LATCH RELEASE SCREW	1013162-00-A	4	
24	Latch Release Escutsheon RH	Unrestricted	LATCH RELEASE RIGHT	1016821-00-A	1	
*	LATCH RELEASE SCREW	Unrestricted	LATCH RELEASE SCREW	1013162-00-A	4	
25	SEAT BELT ESCUTCHEON BLACK	Unrestricted	SEAT BELT BLACK	1013163-01-A	1	
25	SEAT BELT ESCUTCHEON TAN	Unrestricted	SEAT BELT TAN	1013163-03-A	1	
25	SEAT BELT ESCUTCHEON GRAY	Unrestricted	SEAT BELT GRAY	1013163-04-A	1	
26	SEAT BELT ESCUTCHEON SUPPORT	Unrestricted	SEAT BELT SUPPORT	1013157-00-A	1	
*	BLT,M10x22,M8 HF, [10.9],ZnAl,HD,OD18	Unrestricted	BLT, M10x22,M8, ZINC ALUMINUM	1012961-00-A	12	Use to install item #1, #8, and #9. Order in quantities of 25; minimum order: 25.
*	BLT,M8x16,M6 HF, [10.9],ZnAl,HD,OD14.9	Unrestricted	BLT, M8x16, M6, ZINC ALUMINUM	1011818-00-A	4	Use to install item #1. Order in quantities of 50; minimum order: 50.

1306 - 3rd Row Seat Assemblies and Hardware

3rd Row Seats

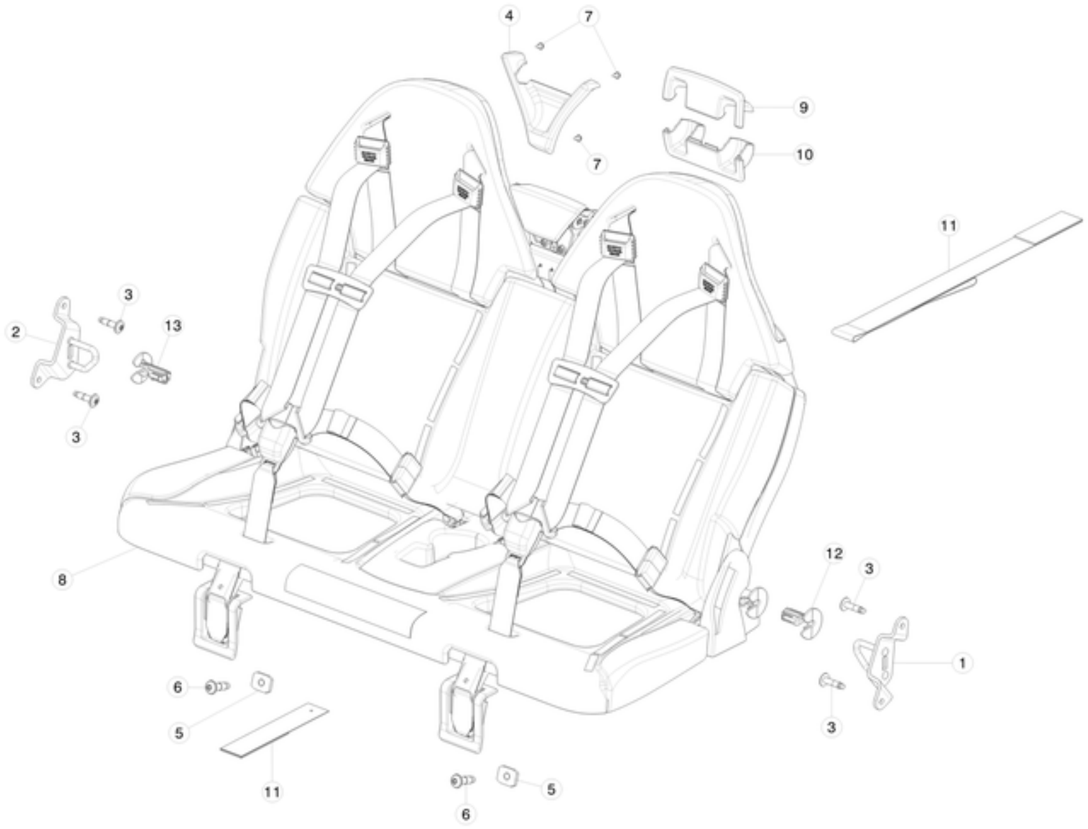

No	Part Name	Category	Part Description	Part Number	Qty	Comments
1	ASY - HIP STRIKER LH	Unrestricted	ASSEMBLY - HIP STRIKER LEFT	1013626-00-D	1	
2	ASY - HIP STRIKER RH	Unrestricted	ASSEMBLY - HIP STRIKER RIGHT	1013629-00-D	1	
4	HRST LATCH COVER	Unrestricted	HEADREST LATCH COVER	1013634-00-B	1	
5	BARREL NUT, M10	Unrestricted	BARREL NUT, M10	2006869-00-A	2	
6	BLT,BFLG,TRX,M10x28.4[10.9]-SM-NP-08	Unrestricted	BOLT, TORX, M10x28.4	1022449-00-A	4	Order in quantities of 25; minimum order: 25.
7	SCR,M4-1.46X10,PT,TRX,WSHR,ZnBlue	Unrestricted	SCREW, M4-1.46X10MM, MATPOINT,TORX, WASHER, ZINC NICKEL BLACK	1013254-00-B	3	Order in quantities of 50; minimum order: 50.
8	ASY - THIRD ROW SEAT	Unrestricted	ASSEMBLY - THIRD ROW SEAT	1017509-00-E	1	
8	CA - ASY - THIRD ROW SEAT	Unrestricted	CANADA - ASSEMBLY - THIRD ROW SEAT	1022762-00-E	1	
9	2ND ROW BEZEL UPR	Unrestricted	2ND ROW BEZEL UPPER	1013633-00-A	1	
10	2ND ROW BEZEL LWR	Unrestricted	2ND ROW BEZEL LOWER	1014277-00-A	1	
11	DETENT LANYARD (VELCRO)	Unrestricted	DETENT LANYARD (VELCRO)	1017249-00-D	1	
12	HIP HOOK LH	Unrestricted	HIP HOOK LEFT	1013575-00-B	1	
13	HIP HOOK RH	Unrestricted	HIP HOOK RIGHT	1013576-00-B	1	
*	LANYARD FOAM SPACER	Unrestricted	LANYARD FOAM SPACER	1026764-00-A	1	
*	TAKATA MINI CHILD SAFETY SEAT, EU	Unrestricted	TAKATA MINI CHILD SAFETY SEAT, EU	1038951-00-A	1	child seat - small

*	TAKATA MIDI CHILD SAFETY SEAT, EU	Unrestricted	TAKATA MIDI CHILD SAFETY SEAT, EU	1038952-00-A	1	child seat
*	TAKATA ISOFIX BASE FOR MINI AND MIDI, EU	Unrestricted	TAKATA ISOFIX BASE FOR MINI AND MIDI, EU	1038953-00-A	1	child seat base

1307 - Front Seat Covers and Pads and Trims

Front Seat Covers and Pads - Base Trim

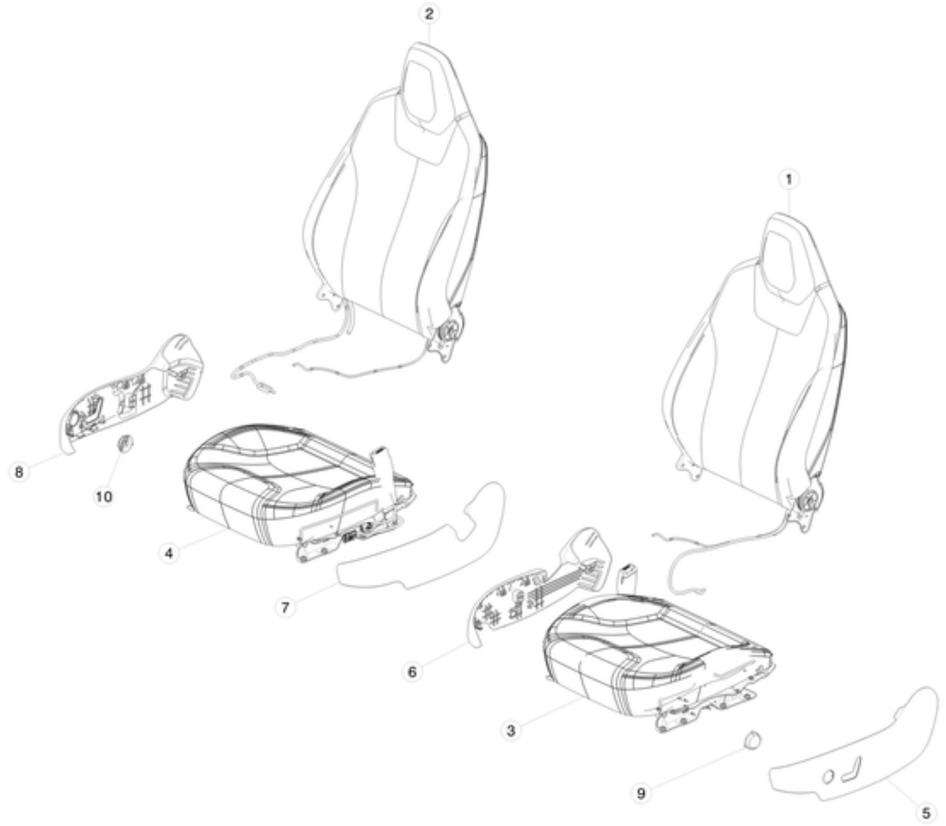

No	Part Name	Category	Part Description	Part Number	Qty	Comments
1	ASY - FSB BASE BLK LH	Unrestricted	ASSEMBLY - FRONT SEAT BACK BASE BLACK LEFT - ALL REGIONS	1013013-01-D	1	
*	US FRNT LH DRIVER BACK TRIM - BASE BLK	Unrestricted	FRONT LEFT BACK TRIM - BASE BLACK - NORTH AMERICA - FOR "NCAP" REGIONS ONLY	1031355-01-B	1	
2	ASY - FSB BASE BLK RH	Unrestricted	ASSEMBLY - FRONT SEAT BACK BASE BLACK RIGHT - ALL REGIONS	1013087-01-D	1	
3	ASY FRONT DR. CUSHION-BASE BLACK LHD LH NON-MEMORY	Unrestricted	ASSEMBLY, FRONT SEAT CUSHION BASE BLACK LEFT NON-MEMORY	1042827-01-A	1	
4	ASY - FSC BASE BLK RH	Unrestricted	ASSEMBLY - FRONT SEAT CUSHION BASE BLACK RIGHT	1013089-01-C	1	
5	OUTER SIDE COVER LH	Unrestricted	OUTER SIDE COVER LEFT	1013095-00-A	1	
6	INNER SIDE COVER LH	Unrestricted	INNER SIDE COVER LEFT	1013076-00-A	1	
7	INNER SIDE COVER RH	Unrestricted	INNER SIDE COVER RIGHT	1013093-00-A	1	
8	OUTER SIDE COVER RH	Unrestricted	OUTER SIDE COVER RIGHT	1013094-00-A	1	
*	FRONT SEAT LH - OUTER SIDE COVER CAP	Unrestricted	SEAT SIDE COVER CAP LEFT	1016686-00-A	1	
*	SEAT SIDE COVER CAP RH	Unrestricted	SEAT SIDE COVER CAP RIGHT	1015639-00-A	1	
*	ASY, FSC STRUCTURE LH	Unrestricted	ASSEMBLY FRONT SEAT STRUCTURE LEFT	1017303-00-A	1	

Front Seat Covers and Pads - Next Generation Trim

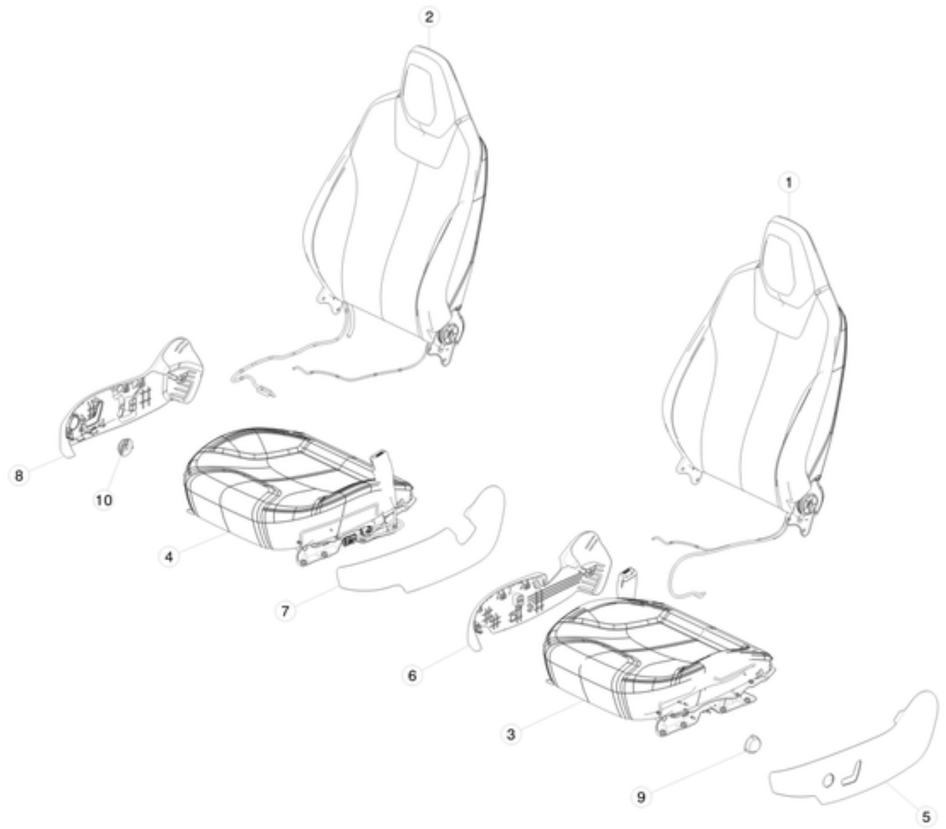

No	Part Name	Category	Part Description	Part Number	Qty	Comments
1	ALL REGION- ASY - FRONT SEAT NEXT GEN BLK LH BACK	Unrestricted	ALL REGION - ASSEMBLY - FRONT SEAT NEXT GEN BLACK LEFT BACK	1056292-02-B	1	
1	ALL REGION- ASY - FRONT SEAT NEXT GEN TAN LH BACK	Unrestricted	ALL REGION - ASSEMBLY - FRONT SEAT NEXT GEN TAN LEFT BACK	1056292-03-B	1	
1	ALL REGION- ASY - FRONT SEAT NEXT GEN GREY LH BACK	Unrestricted	ALL REGION - ASSEMBLY - FRONT SEAT NEXT GEN GRAY LEFT BACK	1056292-04-B	1	
1	ALL REGION- ASY - FRONT SEAT NEXT GEN BLK RH BACK	Unrestricted	ALL REGION - ASSEMBLY - FRONT SEAT NEXT GEN BLACK RIGHT BACK	1058006-02-B	1	
1	ALL REGION- ASY - FRONT SEAT NEXT GEN TAN RH BACK	Unrestricted	ALL REGION - ASSEMBLY - FRONT SEAT NEXT GEN TAN RIGHT BACK	1058006-03-B	1	
1	ALL REGION- ASY - FRONT SEAT NEXT GEN GREY RH BACK	Unrestricted	ALL REGION - ASSEMBLY - FRONT SEAT NEXT GEN GRAY RIGHT BACK	1058006-04-B	1	
3	US - ASY - FRONT SEAT NEXT GEN BLK LHD LH CUSHION	Unrestricted	USA - ASSEMBLY - FRONT SEAT NEXT GEN BLACK LEFT HAND DRIVE LEFT CUSHION	1056258-02-B	1	
3	US - ASY - FRONT SEAT NEXT GEN TAN LHD LH CUSHION	Unrestricted	USA - ASSEMBLY - FRONT SEAT NEXT GEN TAN LEFT HAND DRIVE LEFT CUSHION	1056258-03-B	1	
3	US - ASY - FRONT SEAT NEXT GEN GREY LHD LH CUSHION	Unrestricted	USA - ASSEMBLY - FRONT SEAT NEXT GEN GRAY LEFT HAND DRIVE LEFT CUSHION	1056258-04-B	1	
3	CA-EU-APAC - ASY - FRONT SEAT NEXT GEN GREY LHD LH CUSHION	Unrestricted	CANADA - EUROPE - APAC - ASSEMBLY - FRONT SEAT NEXT GEN GRAY LEFT CUSHION	1056287-04-B	1	
4	US - ASY - FRONT SEAT NEXT GEN BLK LHD RH CUSHION	Unrestricted	ASSEMBLY - FRONT SEAT NEXT GEN BLACK LEFT HAND DRIVE RIGHT CUSHION	1056288-02-B	1	
4	US - ASY - FRONT SEAT NEXT GEN TAN LHD RH CUSHION	Unrestricted	ASSEMBLY - FRONT SEAT NEXT GEN TAN LEFT HAND DRIVE RIGHT CUSHION	1056288-03-B	1	
4	US - ASY - FRONT SEAT NEXT GEN GREY LHD RH CUSHION	Unrestricted	ASSEMBLY - FRONT SEAT NEXT GEN GRAY LEFT HAND DRIVE RIGHT CUSHION	1056288-04-B	1	
5	OUTER SIDE COVER LH	Unrestricted	OUTER SIDE COVER LEFT	1013095-00-A	1	
6	INNER SEAT SIDE COVER LH	Unrestricted	INNER SIDE COVER LEFT	1013076-00-A	1	

7	INNER SIDE COVER RH	Unrestricted	INNER SIDE COVER RIGHT	1013093-00-A	1	
8	OUTER SIDE COVER RH	Unrestricted	OUTER SIDE COVER RIGHT	1013094-00-A	1	
*	BOLT TORX MPT LK M10X1.5 PC10.9 PO	Unrestricted	MARRIAGE BOLTS - FRONT SEAT ASSEMBLIES	1067387-00-A	8	for attaching the front seat back to the front seat bottom. 4 per seat.

Front Seat Covers and Pads - X into Seats

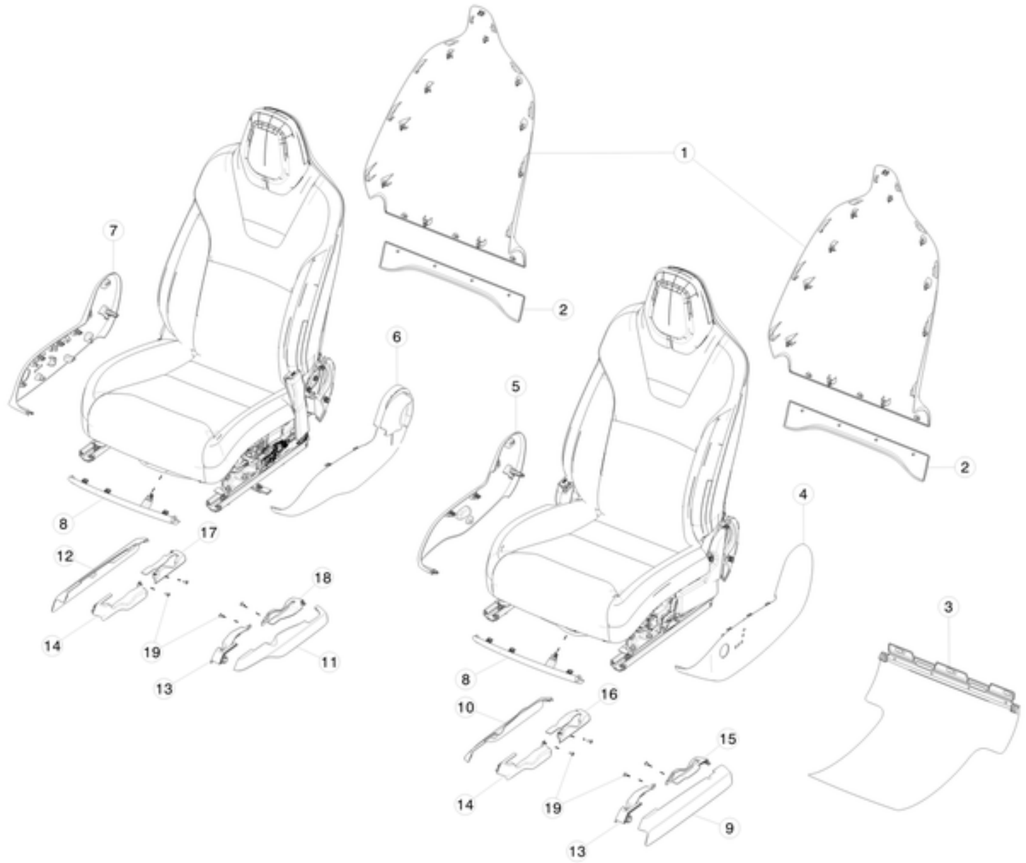

No	Part Name	Category	Part Description	Part Number	Qty	Comments
1	CVR ASY MX FSB Wrapped	Unrestricted	CVR ASY MX FSB Wrapped	1066790-00-A	1	
2	CVR FSB LWR MX MIC	Unrestricted	CVR FSB LWR MX MIC	1067390-00-A	1	
3	MX/MS FSB HINGE TOE KICK ASSY	Unrestricted	MX/MS FSB HINGE TOE KICK ASSY	1088150-00-A	2	
4	CVR ASSY MX/MS FS SIDE OTR LH MIC	Unrestricted	CVR ASSY MX/MS FS SIDE OTR LH MIC	1083454-00-A	1	1083454-00-A and 1066792-00-A are fully interchangeable
5	CVR ASY RECL MX LHS OTR MIC	Unrestricted	CVR ASY RECL MX LHS OTR MIC	1066795-00-B	1	
6	CVR ASSY MX/MS FS SIDE INR LH MIC	Unrestricted	CVR ASSY MX/MS FS SIDE INR LH MIC	1083453-00-A	1	1083453-00-A and 1066791-00-A are fully interchangeable
7	CVR ASSY RECL MX LHS INR MIC	Unrestricted	CVR ASSY RECL MX LHS INR MIC	1066796-00-B	1	
8	CVR ASSY MX/MS FS SIDE INR RH MIC	Unrestricted	CVR ASSY MX/MS FS SIDE INR RH MIC	1083456-00-A	1	1083456-00-A and 1066793-00-A are fully interchangeable
9	CVR ASSY RECL MX RHS INR MIC	Unrestricted	CVR ASSY RECL MX RHS INR MIC	1066798-00-B	1	
10	CVR ASSY MX/MS FS SIDE OTR RH MIC	Unrestricted	CVR ASSY MX/MS FS SIDE OTR RH MIC	1083458-00-A	1	1083458-00-A and 1066794-00-A are fully interchangeable
11	CVR ASSY RECL MX RHS OTR MIC	Unrestricted	CVR ASSY RECL MX RHS OTR MIC	1066797-00-B	1	
12	CVR ASSY FSC FRONT MIC	Unrestricted	CVR ASSY FSC FRONT MIC	1083459-00-A	1	1083459-00-A and 1066799-00-A are fully interchangeable
*	CLIP ITW RIBLOCK 146-0921	Unrestricted	CLIP ITW RIBLOCK 146-0921	1067403-00-A	12	Use clip to connect side and front covers

STEERING RACK AND LOWER COLUMN

Steering Gear and Lower Column

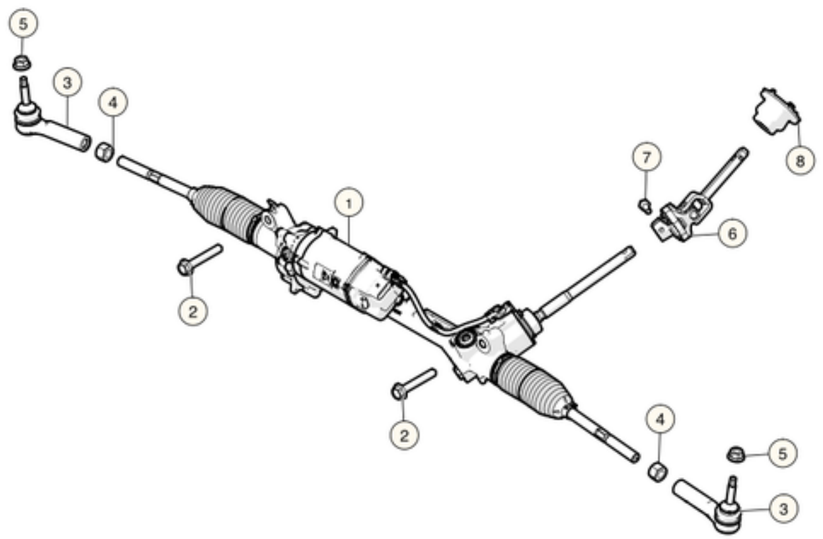

No	Part Name	Category	Part Description	Part Number	Qty	Comments
1	STEERING GEAR LHD, MANDO	Unrestricted	STEERING GEAR - LEFT HAND DRIVE, MANDO	1060801-00-E	1	For vehicles built before August 21st, 2017. Option Code APH2
1	STEERING GEAR LHD, MANDO	Unrestricted	STEERING GEAR - LEFT HAND DRIVE, MANDO	1070801-00-D	1	For vehicles built on or after August 21st, 2017. Option Code APH3
2	BOLT HF M14x78 PC109	Unrestricted	BOLT HF M14x78 PC109	1051424-00-A	2	
*	FRICTION SHIM,M14x17.5x0.16,STL,GRADE 25	Unrestricted	FRICTION SHIM,M14x17.5x0.16,STL,GRADE 25	1080982-00-A	**	Refer to SB-16-32-001.
3	TIE ROD BALL JOINT	Unrestricted	TIE ROD BALL JOINT	1027841-00-B	2	
4	NUT H M18x1.50 [10]-G720	Unrestricted	NUT, M18x1.50	2007102	2	Order in quantities of 25; minimum order: 25.
5	NUT HFPT M14x2 STL 10	Unrestricted	NUT M14-2.00 ZINC ALUMINUM	1004356-00-B	2	OK to use -A. Order in quantities of 25; minimum order: 25.
6	I-SHAFT STEERING LINK - LOWER	Unrestricted	I-SHAFT STEERING LINK - LOWER	1060802-00-A	1	
7	BOLT H M10x1.50x35 [10.9]-G720	Unrestricted	BOLT, M10x1.50x35MM	2007103	1	Order in quantities of 25; minimum order: 25.
8	STEERING I-SHAFT DASH SEAL - DBL ISO	Unrestricted	I-SHAFT STEERING DASH SEAL	1027823-00-A	1	

Upper Column and Steering Wheel

Steering Column and Wheel

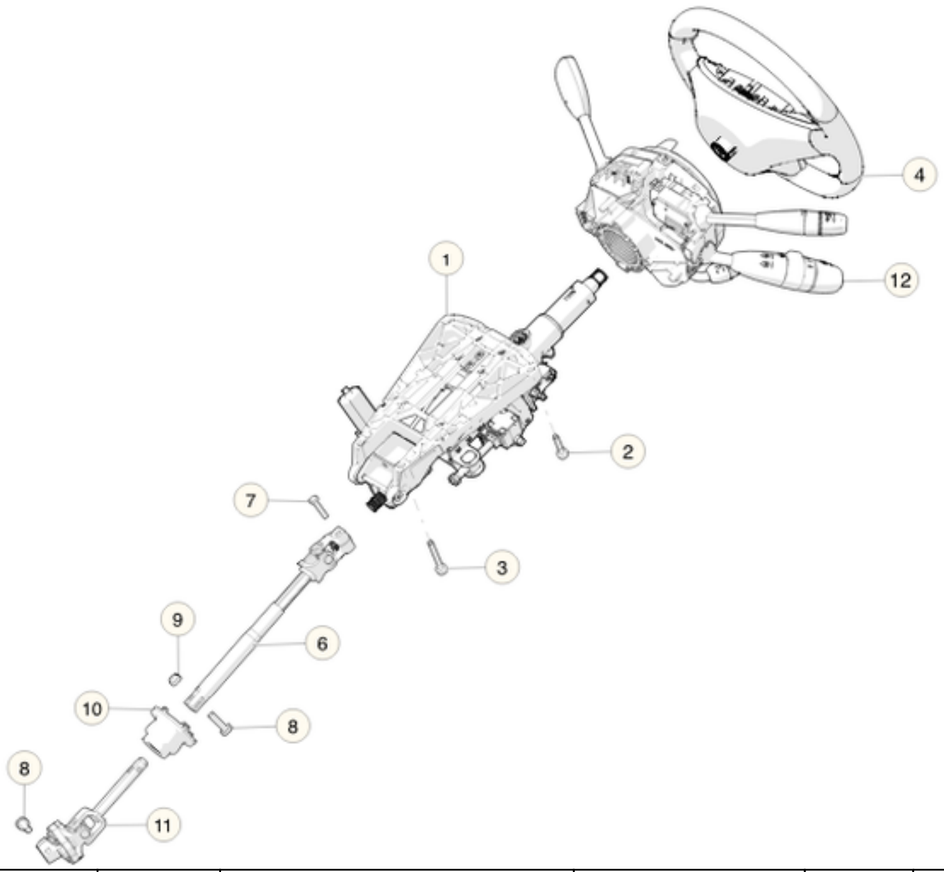

No	Part Name	Category	Part Description	Part Number	Qty	Comments
1	STEERING COLUMN ASSY - TK	Unrestricted	STEERING COLUMN ASSEMBLY	1027811-00-F	1	
2	M8 x 1.25 x 40 HEX FLG BOLT	Unrestricted	BOLT M8x1.25x40	2007100	1	
3	M8 x 1.25 x 65 HEX FLG BOLT	Unrestricted	BOLT M8x1.25x65	2007099	2	
4	STEERING WHEEL ASSY	Unrestricted	STEERING WHEEL ASSEMBLY	1005279-00-E	1	For vehicles without cold weather package.
4	STEERING WHEEL ASY, VEGAN/PUR	Unrestricted	STEERING WHEEL ASSEMBLY - PUR	1005279-02-E	1	Vegan Steering Wheel assembly. Special order- Must provide VIN when placing order.
4	STEERING WHEEL ASSY MAMMOTH DARK, HEATED	Unrestricted	STEERING WHEEL ASSEMBLY WITH HEATER	1036774-00-D	1	For vehicles with cold weather package.
5	STEERING WHEEL BOLT	Unrestricted	BOLT, COUNTER SINK, HEX DRIVE, M16x17	1011615-00-A	1	One time use. OK to use 1036655-00-A.
6	STEERING I-SHAFT LINK UPPER	Unrestricted	I-SHAFT STEERING LINK - UPPER	6006939-98-B	1	
7	BOLT H M8x1.25x35 [10.9]-G720	Unrestricted	BOLT, M8x1.25x35MM	2007098	1	
8	BOLT H M10x1.50x35 [10.9]-G720	Unrestricted	BOLT, M10x1.50x35MM	2007103	1	Order in quantities of 25; minimum order: 25.
9	NUT HF M10x1.5 ZnAl [10]	Unrestricted	NUT, M10x1.5 ZINC ALUMINUM	1006883-00-A	1	
10	STEERING I-SHAFT DASH SEAL DBL ISO	Unrestricted	I-SHAFT STEERING DASH SEAL	1027823-00-A	1	
11	STEERING I-SHAFT LINK LOWER	Unrestricted	I-SHAFT STEERING LINK - LOWER	1060802-00-A	1	
12	STEERING COLUMN CONTROL MODULE	Unrestricted	STEERING COLUMN CONTROL MODULE	1057354-00-B	1	For vehicles with option code: CW00

12	STEERING COLUMN CONTROL MODULE	Unrestricted	STEERING COLUMN CONTROL MODULE	1057356-00-B	1	For vehicles with option code: CW02

AIR SUSPENSION SYSTEM

Air Suspension Compressor and Reservoir

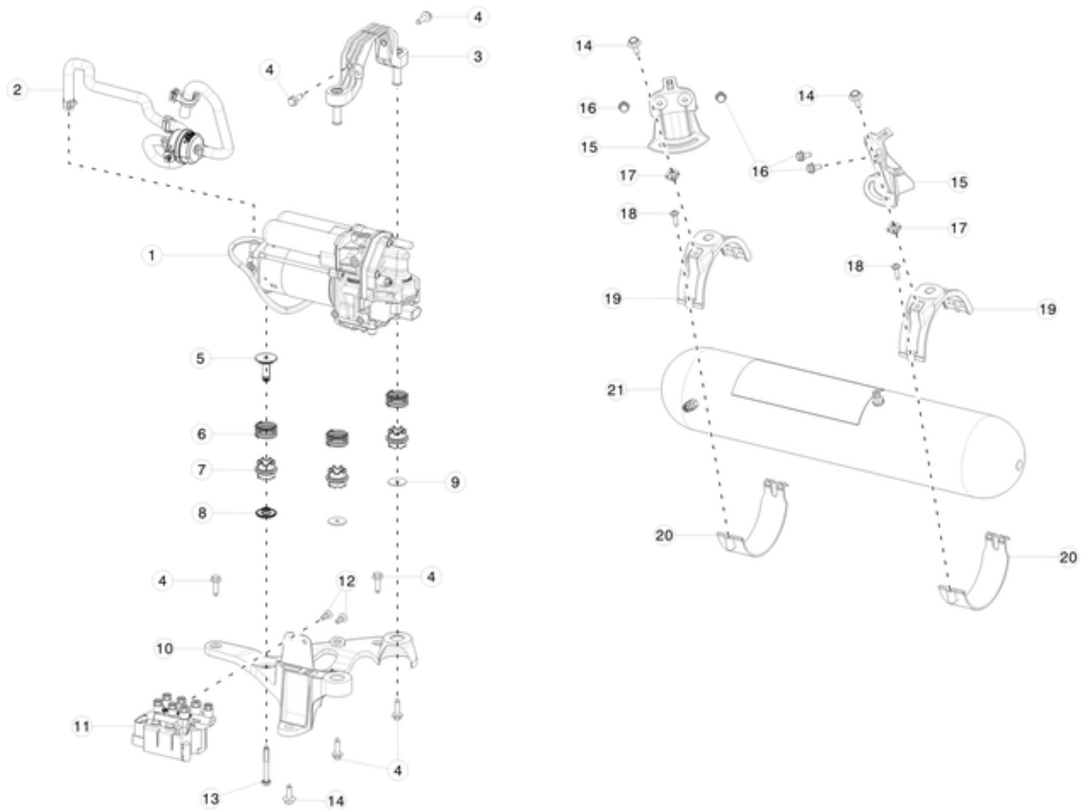

No	Part Name	Category	Part Description	Part Number	Qty	Comments
1	AIR SUSP COMPRESSOR	Unrestricted	AIR SUSPENSION COMPRESSOR	1027911-00-F	1	
2	AIR SUSP LINE INTAKE	Unrestricted	AIR SUSPENSION LINE INTAKE	1061821-00-B	1	
3	AIR SUSP COMP CARRIER BRKT - MODEL S	Unrestricted	AIR SUSPENSION COMPRESSOR CARRIER BRACKET	1064674-00-B	1	
4	RESVR TO BRKT BOLTS	Unrestricted	BOLT M6-1.00x20 ZINC ALUMINUM	1009420-00-A	6	
5	AIR SUSP COMPRESSOR SPRING SEAT	Unrestricted	AIR SUSPENSION COMPRESSOR SPRING SEAT	1027916-00-A	1	
6	AIR SUSP COMPRESSOR SPRING	Unrestricted	AIR SUSPENSION COMPRESSOR SPRING	1027914-00-A	3	
7	AIR SUSP COMPRESSOR ISOLATOR	Unrestricted	AIR SUSP COMPRESSOR ISOLATOR	1027912-00-A	3	
8	AIR SUSP COMPRESSOR SPRING WASHER	Unrestricted	AIR SUSPENSION COMPRESSOR SPRING WASHER	1027917-00-A	1	
9	WASHER,FL,M6x25,STL,ZNNI	Unrestricted	WASHER,FL,M6x25,STL,ZNNI	1066692-00-A	2	
10	AIR SUSP COMPRESSOR BRKT	Unrestricted	AIR SUSPENSION COMPRESSOR BRACKET	1060855-00-A	1	
11	AIR SUSP VALVE BLOCK	Unrestricted	AIR SUSPENSION VALVE BLOCK	1027919-00-B	1	
12	SCR - M6x16 - TRX - STL - Znc	Unrestricted	SCREW, M6x16,TORX, STEEL ZINC	1008169-00-A	2	Order in quantities of 50; minimum order: 50.
13	BLT M6x1.00x50 [8.8]-D-ZnAl-W	Unrestricted	BOLT, M6x1.00x50MM ZINC ALUMINUM	1006528-00-A	3	Order in quantities of 50; minimum order: 50.
14	BLT HF M6x1.00x18 [8.8]-D-ZnAl-W	Unrestricted	BOLT M6x1.00x18 ZINC ALUMINUM	1006529-00-A	1	
15	AIR SUSP RESERVOIR MOUNT - BASE	Unrestricted	AIR SUSP RESERVOIR MOUNT - BASE	1013835-00-C	2	

16	BLT HF M6-1.00x12[8.8]ZnAl	Unrestricted	BLT HF M6-1.00x12[8.8]ZnAl	2007220	2	
17	U-NUT,M6 X 1	Unrestricted	U-NUT, M6 X 1	1010416-00-B	2	
18	BLT,TPG,TRX,PLFG,M5-DPTx22[St]-RND-10	Unrestricted	BOLT, TORX , M5x22	1006534-00-A	2	
19	AIR SUSP RESERVOIR MOUNT - CRADLE	Unrestricted	AIR SUSP RESERVOIR MOUNT - CRADLE	1013836-00-F	2	
20	AIR SUSP RESERVOIR MOUNT - STRAP	Unrestricted	AIR SUSP RESERVOIR MOUNT - STRAP	1013837-00-C	2	
21	AIR SUSP RESERVOIR W/ FILL VALVE	Unrestricted	AIR SUSPENSION RESERVOIR WITH FILL VALVE	6006408-00-B	1	

Air Suspension Pressure Lines

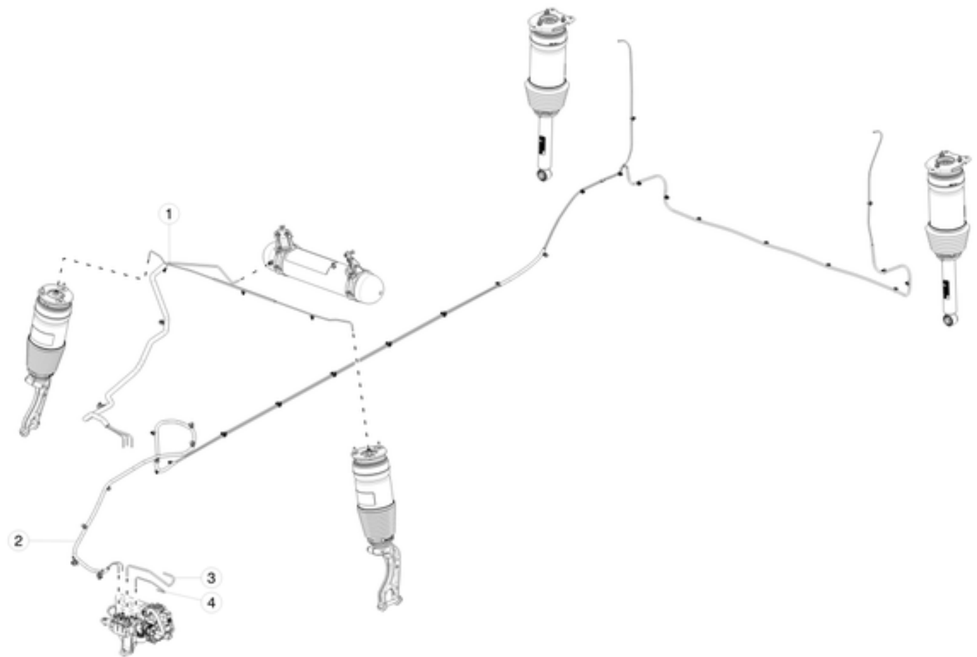

No	Part Name	Category	Part Description	Part Number	Qty	Comments
1	AIR SUSP AIR LINE FRONT BUNDLE ASY	Unrestricted	AIR SUSP AIR LINE FRONT BUNDLE ASY	1061811-00-A	1	
2	AIR SUSP AIR LINE REAR BUNDLE ASY	Unrestricted	AIR SUSP AIR LINE REAR BUNDLE ASY	1061812-00-A	1	
3	AIR SUSP LINE COMP TO VALVE	Unrestricted	AIR SUSP LINE COMP TO VALVE	1061815-00-A	1	
4	AIR SUSP LINE BOOST ASY	Unrestricted	AIR SUSP LINE BOOST ASY	1061813-00-A	1	
*	4mm Voss 203 Air Suspension Fitting	Unrestricted	Voss Connectors - 4 mm	1108866-00-A	1	

Height Sensors

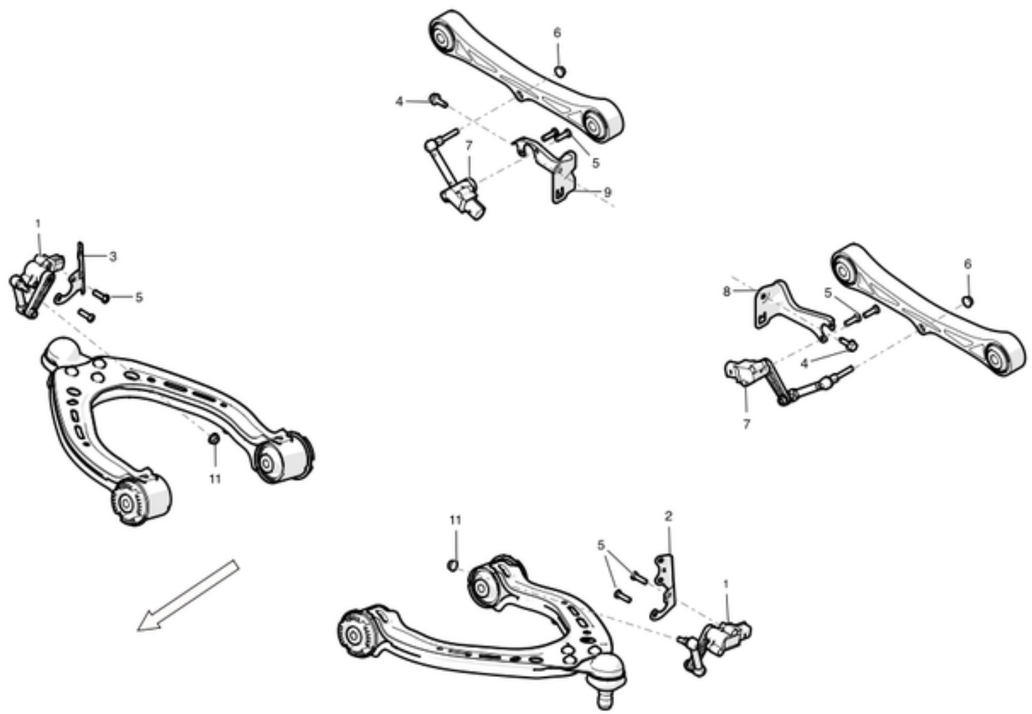

No	Part Name	Category	Part Description	Part Number	Qty	Comments
1	SUSP RIDE HEIGHT SNSR ASY FR, LEFT	Unrestricted	RIDE HEIGHT SUSPENSION SENSOR ASSEMBLY - FRONT, LEFT	1027941-00-A	2	For vehicles with air suspension.
1	SUSP RIDE HEIGHT SNSR ASY FR, RIGHT	Unrestricted	RIDE HEIGHT SUSPENSION SENSOR ASSEMBLY - FRONT, RIGHT	1027946-00-A	2	For vehicles with air suspension.
4	BLT HF M6-1.00x20[8.8]ZnAlW	Unrestricted	BOLT M6-1.00x20 ZINC ALUMINUM	1009420-00-A	2	
5	BOLT - M5X15MM LG - BUTTONHEAD - TORX	Unrestricted	BOLT, M5X15MM LONG, BUTTON HEAD,TORX	1003397-00-A	8	
6	NUT,HEX,M6,1.0,STL,ZINCFLAKE,SL	Unrestricted	NUT, HEX, M6, 1.0, STEEL, ZINC	1006799-00-B	2	
7	SUSP RIDE HEIGHT SNSR ASY RR-LEFT	Unrestricted	RIDE HEIGHT SUSPENSION SENSOR ASSEMBLY - REAR - LEFT	1027971-00-A	2	
7	SUSP RIDE HEIGHT SNSR ASY RR-RIGHT	Unrestricted	RIDE HEIGHT SUSPENSION SENSOR ASSEMBLY - REAR - RIGHT	1027976-00-A	2	For vehicles with air suspension.
8	RR SUSP RIDE HEIGHT SNSR BRKT LH	Unrestricted	RIDE HEIGHT SUSPENSION SENSOR BRACKET - REAR LEFT	6006523-00-B	1	
9	RR SUSP RIDE HEIGHT SNSR BRKT RH	Unrestricted	RIDE HEIGHT SUSPENSION SENSOR BRACKET - REAR RIGHT	6006526-00-B	1	
11	NUT,LCK,HEX,FLG,M6x1.00[8]-4	Unrestricted	NUT, LOCK, HEX, FLANGE, M6x1.00	1004378-00-B	4	Order in quantities of 50; minimum order: 50.

Module - Air Suspension

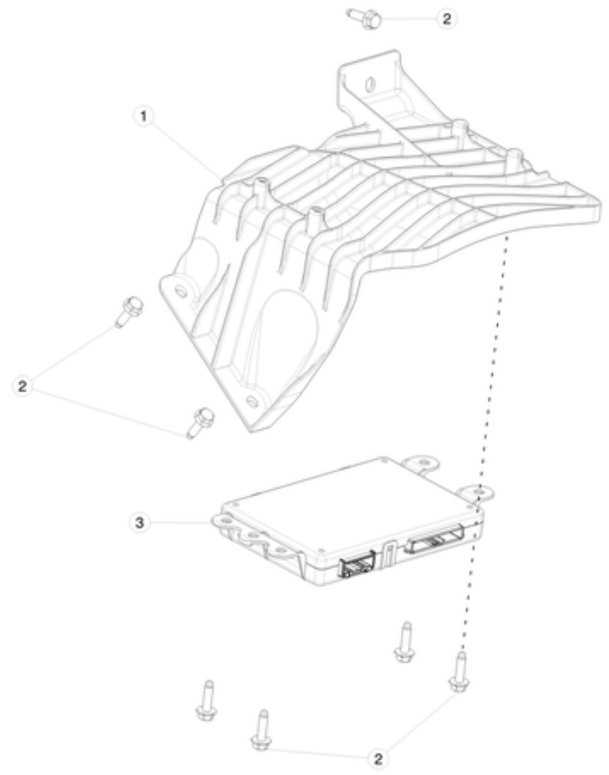

No	Part Name	Category	Part Description	Part Number	Qty	Comments
1	BRACKET - ECU - AIR SUSPENSION	Unrestricted	ACTIVE SUSPENSION PROCESSOR BRACKET	1007493-00-G	1	
2	BLT HF M6-1.00x20[8.8]ZnAlW	Unrestricted	BLT HF M6-1.00x20[8.8]ZnAlW	1009420-00-A	3	
3	ASY, AIR SUSP CONTROLLER	Unrestricted	AIR SUSPENSION CONTROLLER	1060989-00-B	1	

FRONT SUSPENSION (INCLUDING HUBS)

Front Air Spring

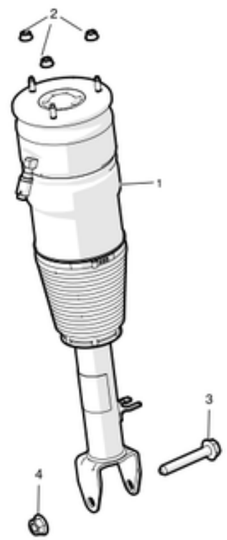

No	Part Name	Category	Part Description	Part Number	Qty	Comments
1	FRONT AIR SPRING MODULE - DM	Unrestricted	FRONT AIR SPRING MODULE - DUAL MOTOR - 90D, P90D, P100D (Common for LH and RH)	1067361-25-C	2	BTX6 AND SU01 AND DV4W, BT70 AND SU01 AND DV4W, BTX4 AND SU01 AND DV4W, BTX5 AND SU01 AND DV4W
1	FRONT AIR SPRING MODULE - RWD	Unrestricted	FRONT AIR SPRING MODULE - RWD - 70, 75 (Common for LH and RH)	1067362-25-B	2	BT70 AND SU01 AND X025 AND DV2W, BTX5 AND SU01 AND X025 AND DV2W
2	NUT HF M8x1.25 10-ZnAl-W	Unrestricted	NUT, M8x1.25 10-ZINC ALUMINUM	2007088	6	Order in quantities of 50; minimum order: 50.
3	BOLT HF M14x94 PC109	Unrestricted	BOLT HF M14x94 PC109	1008614-00-C	2	
3	BOLT HF M14x102 PC109	Unrestricted	BOLT M14 X 102	1056323-00-A	2	for Dual Motor
4	NUT HF M14x2.00 [10]-G720	Unrestricted	NUT, M14x2.00	2007073	2	

Front Coil Spring and Damper

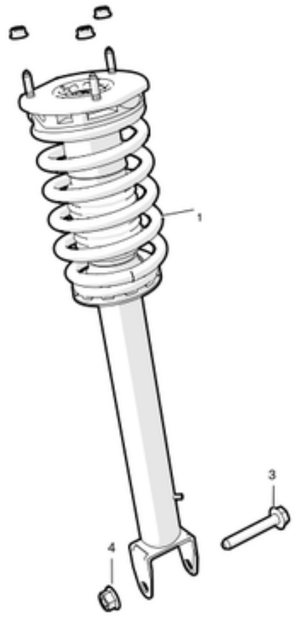

No	Part Name	Category	Part Description	Part Number	Qty	Comments
1	FRONT COIL SPRING MODULE - S2	Unrestricted	FRONT COIL SPRING MODULE - RWD - 70 AND 75	1015619-01-E	2	BT70 AND SU00 AND X025 AND DV2W; BTX5 AND SU00 AND X025 AND DV2W
1	FRONT COIL SPRING MODULE - DM S3	Unrestricted	FRONT COIL SPRING MODULE - DUAL MOTOR - 90D, P90D, P100D	1030607-00-G	2	BTX6 AND SU00 AND DV4W; BTX4 AND SU00 AND DV4W
1	FRONT COIL SPRING MODULE - DM S2	Unrestricted	FRONT COIL SPRING MODULE - S2 - DUAL MOTOR - 70D, 75D	1030607-01-D	2	BT70 AND SU00 AND DV4W; BTX5 AND SU00 AND DV4W
2	NUT HF M8x1.25 10-ZnAl-W	Unrestricted	NUT, M8x1.25 10-ZINC ALUMINUM	2007088	6	Order in quantities of 50; minimum order: 50.
3	BOLT HF M14x94 PC109	Unrestricted	BOLT HF M14x94 PC109	1008614-00-C	2	
4	NUT HF M14x2.00 [10]-G720	Unrestricted	NUT, M14x2.00	2007073	2	

Front Knuckle - Hub and Bearing

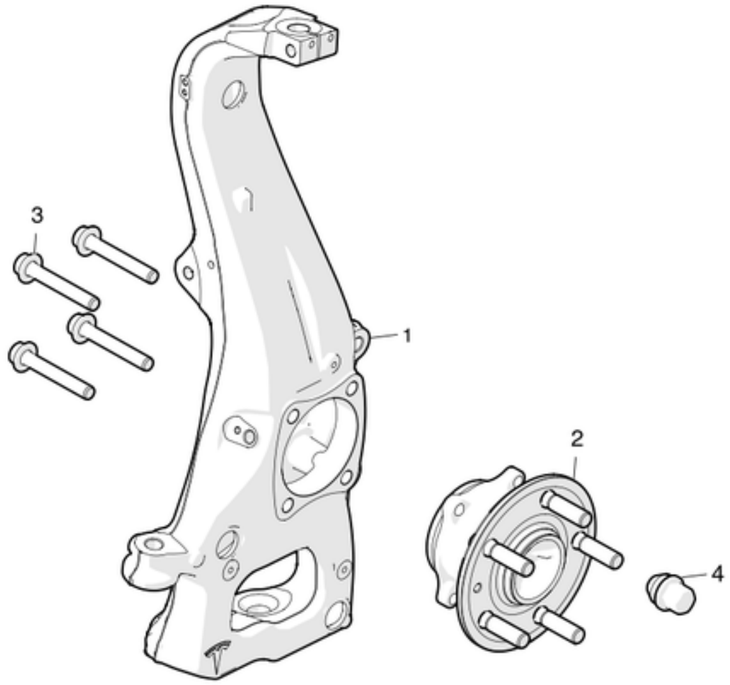

No	Part Name	Category	Part Description	Part Number	Qty	Comments
1	FRONT LEFT SUSPENSION KNUCKLE ASSSEMBLY	Unrestricted	FRONT LEFT SUSPENSION KNUCKLE ASSSEMBLY	1030605-00-D	1	
1	FRONT RIGHT SUSPENSION KNUCKLE ASSSEMBLY	Unrestricted	FRONT RIGHT SUSPENSION KNUCKLE ASSSEMBLY	1030606-00-D	1	
2	FR HUB AND BEARING ASSY	Unrestricted	FRONT HUB AND BEARING ASSEMBLY	6007040-00-A	2	Option code: DV2W
2	HUB AND BEARING ASSY PERFORMANCE	Unrestricted	FRONT AND REAR HUB AND BEARING ASSEMBLY - PERFORMANCE	1027170-00-A	2	Option code DV4W
3	BOLT HF M12x1.25x75 [10.9]-G720	Unrestricted	BOLT, M12x1.25x75MM	2007114	8	
3	BOLT HF M12x1.5x55 [10.9]-U-G720	Unrestricted	BOLT, M12x1.5x55MM	2007066	8	
4	NUT LUG M14x1.50 [10]-CHR	Unrestricted	LUG NUT - M14x1.50 - CHROME	2007065	10	

Front Stabilizer Bar and Links

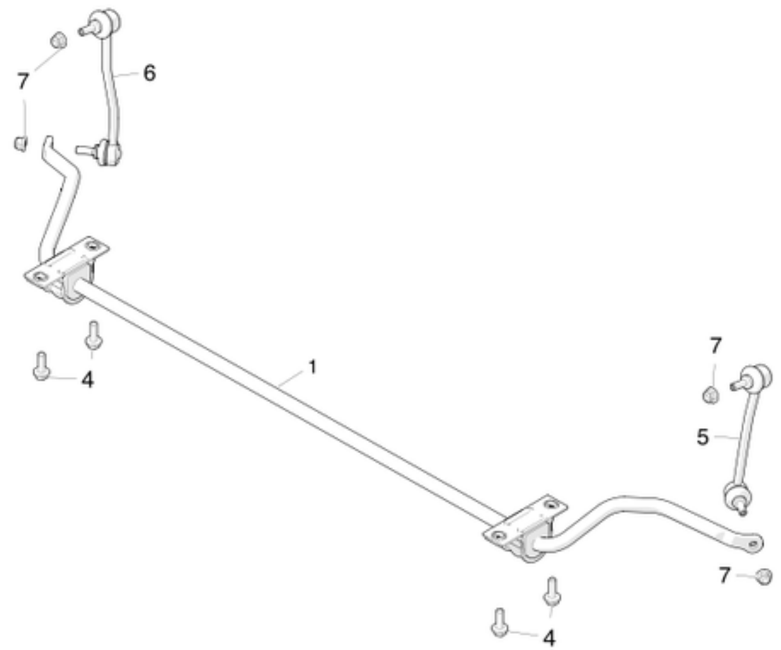

No	Part Name	Category	Part Description	Part Number	Qty	Comments
1	FR STABAR, 22MM	Unrestricted	FRONT SUSPENSION STABILIZER BAR 22MM	1059381-00-B	1	Option codes: SU00; SU01 AND DV2W
1	FR STABAR, 24MM	Unrestricted	FRONT SUSPENSION STABILIZER BAR 24MM	1059386-00-B	1	Option codes: SU01 AND DV4W
4	BOLT HF M10x1.50x30 [10.9]-U-MP-G720	Unrestricted	BOLT M10x1.50x30	2007069	2	
5	FR SUSP STABI LINK ASSY DMD	Unrestricted	FRONT STABAR LINK	1030603-00-B	1	
7	NUT HFPT M10x1.25 [10]-G720	Unrestricted	NUT, M10x1.25	2007090-00-C	4	

Front Suspension Arms

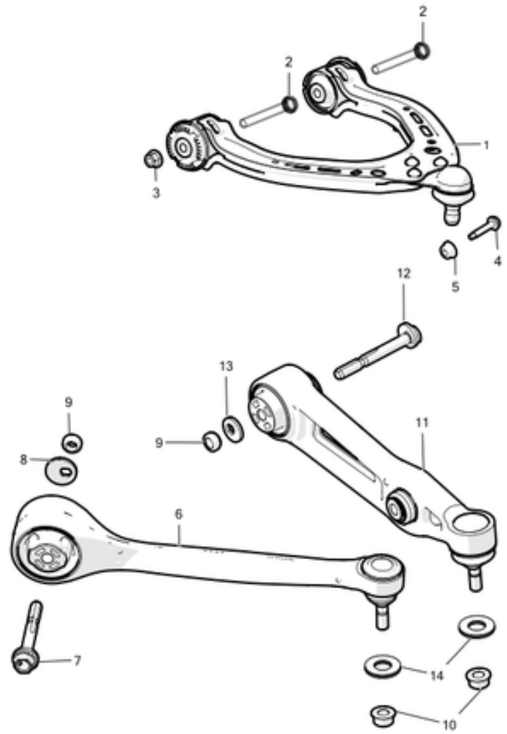

No	Part Name	Category	Part Description	Part Number	Qty	Comments
1	FR SUSP UCA ASSY LH	Unrestricted	UPPER CONTROL ARM SUSPENSION ASSEMBLY - FRONT LEFT - SINGLE MOTOR	6006532-00-A	1	Option code: DV2W
1	FR SUSP UCA ASSY RH	Unrestricted	UPPER CONTROL ARM SUSPENSION ASSEMBLY - FRONT RIGHT - SINGLE MOTOR	6008930-00-A	1	Option code: DV2W
1	FR UPR CTRL ARM, LH, DUAL MOTOR	Unrestricted	UPPER CONTROL ARM SUSPENSION ASSEMBLY - FRONT LEFT - DUAL MOTOR	1043965-00-A	1	Option code: DV4W
1	FR SUSP UCA ASSY RH	Unrestricted	UPPER CONTROL ARM SUSPENSION ASSEMBLY - FRONT RIGHT - DUAL MOTOR	1043966-00-A	1	Option code: DV4W
2	BLT HF M10x1.50x100 [10.9] DP ZnAl-W	Unrestricted	BOLT, M10x1.50x100MM, ZINC ALUMINUM	1004357-00-A	4	
3	NUT HFPT M10x1.50 [10]-G720	Unrestricted	NUT, M10x1.50mm	2007059-00-B	2	Order in quantities of 25; minimum order: 25.
4	BLT BTNHD M10x1.50x57 [10.9] ZnAl-W	Unrestricted	BOLT, BUTTON HEAD, M10x1.50x57MM, ZINC ALUMINUM	1004350-00-A	2	
5	NUT HF M10x1.50 [10] ZnAl-W	Unrestricted	NUT, M10x1.50MM, ZINC ALUMINUM	1004351-00-A	2	
6	FORE LINK ASSY, LH	Unrestricted	FRONT FORE LINK SUSPENSION ASSSEMBLY - LEFT	1041570-00-B	1	Do not use -A.
6	FORE LINK ASSY, RH	Unrestricted	FRONT FORE LINK SUSPENSION ASSSEMBLY - RIGHT	1041575-00-B	1	Do not use -A.
7	BOLT H CAM M14x2.00x114 [10.9]-G720	Unrestricted	BOLT, CAM, M14X2.00X114MM	2007108	2	Order in quantities of 10; minimum order: 10.
8	WASHER CAM M14x38x6x2.5 [10]-G720	Unrestricted	WASHER, CAM, M14X38X6x2.5MM	2007115	2	Order in quantities of 50; minimum order: 50.
9	NUT CLN HEX M14x2.0 [10] ZnAl-W	Unrestricted	NUT, HEX M14x2.0 ZINC ALUMINUM	1006484-00-A	4	Order in quantities of 25; minimum order: 25.
10	NUT HFPT M14x1.50 [10] ZnAl-W	Unrestricted	NUT, M14x1.50 ZINC ALUMINUM	1004358-00-C	4	
11	FFR SUSP AFT LINK ASSY	Unrestricted	FFRONT AFT LINK SUSPENSION ASSEMBLY	1027351-00-C	2	Both LH and RH links must be the same. Do not use -00-B.
12	BOLT H CAM M14x2.00x114 [10.9]-G720	Unrestricted	BOLT, CAM, M14x2.00x114MM	2007106	2	Order in quantities of 10; minimum order: 10.

13	WASHER CAM M14x32x3x2.5 [10]-G720	Unrestricted	WASHER, CAM, M14x32x3x2.5MM	2007107	2	Order in quantities of 25; minimum order: 25.
14	WASHER, NORDLOCK, 15.2x30.7x3.4	Unrestricted	NORDLOCK WASHER - 15.2x30.7x3.4MM	1033093-00-A	4	

REAR SUSPENSION (INCLUDING HUBS)

Rear Air Spring

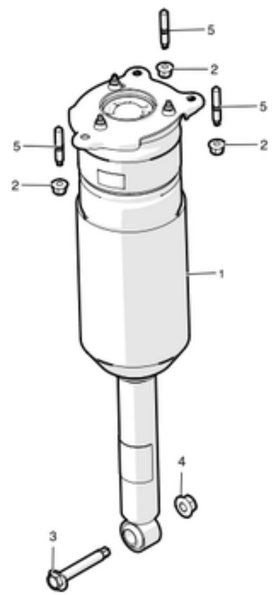

No	Part Name	Category	Part Description	Part Number	Qty	Comments
1	REAR AIR SPRING MODULE LH - S3, S2	Unrestricted	REAR AIR SPRING MODULE LEFT - RWD	1067461-26-B	1	Option code: DV2W
1	REAR AIR SPRING MODULE LH - DM	Unrestricted	REAR AIR SPRING MODULE LEFT - DUAL MOTOR	1067461-25-C	1	Option code: DV4W
1	REAR AIR SPRING MODULE RH - S3, S2	Unrestricted	REAR AIR SPRING MODULE RIGHT - RWD	1067466-26-B	1	Option code: DV2W
1	REAR AIR SPRING MODULE RH - DM	Unrestricted	REAR AIR SPRING MODULE RIGHT - DUAL MOTOR	1067466-25-C	1	Option code: DV4W
2	NUT HFPT M10x1.50 [10]-G720	Unrestricted	NUT, M10x1.50mm	2007059-00-B	6	Order in quantities of 25; minimum order: 25.
3	BLT HF CLPHD M14x2x84 [10.9] TRX ZnAl-W	Unrestricted	BLT, M14x2.0x90, TORX ZINC ALUMINUM	1008339-00-C	2	
4	NUT HF M14x2.00 [10]-G720	Unrestricted	NUT, M14x2.00	2007073	2	
5	STUD TRX M10x1.5x60 [10.9] MP ZnAl-W	Unrestricted	STUD, TORX, M10X1.5X60, MATPOINT ZINC ALUMINUM	1007510-00-B	6	
*	REAR SHOCK TOWER HOLE FOAM SEAL	Unrestricted	REAR SHOCK TOWER HOLE FOAM SEAL	1021395-00-A	2	

Rear Coil Spring and Damper

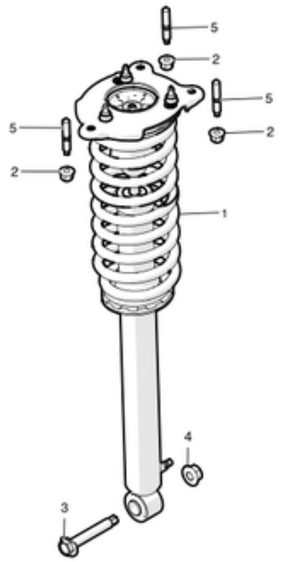

No	Part Name	Category	Part Description	Part Number	Qty	Comments
1	REAR COIL SPRING MODULE S3	Unrestricted	REAR COIL SPRING MODULE - RWD - 90	1015620-00-E	2	
1	REAR COIL SPRING MODULE S2	Unrestricted	REAR COIL SPRING MODULE - RWD - 70, 75kwh	1015620-01-E	2	
1	REAR COIL SPRING MODULE - DM S3	Unrestricted	REAR COIL SPRING MODULE - DUAL MOTOR - 70D, 75D, 90D	1015620-03-D	2	
1	REAR COIL SUSPENSION MODULE - DM S3 PERF	Unrestricted	REAR COIL SPRING MODULE - DUAL MOTOR - P90D	1015620-05-B	2	
2	NUT HFPT M10x1.50 [10]-G720	Unrestricted	NUT, M10x1.50mm	2007059-00-B	6	Order in quantities of 25; minimum order: 25.
3	BLT HF CLPHD M14x2x84 [10.9] TRX ZnAl-W	Unrestricted	BLT, M14x2.0x90, TORX ZINC ALUMINUM	1008339-00-C	2	
4	NUT HF M14x2.00 [10]-G720	Unrestricted	NUT, M14x2.00	2007073	2	
5	STUD TRX M10x1.5x60 [10.9] MP ZnAl-W	Unrestricted	STUD, TORX, M10X1.5X60, MATPOINT ZINC ALUMINUM	1007510-00-B	6	

Rear Knuckle - Hub and Bearing

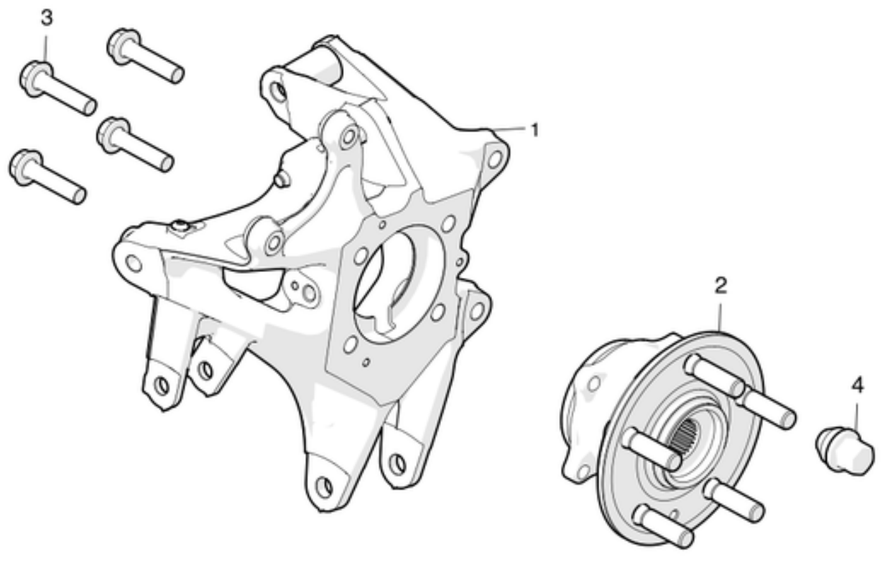

No	Part Name	Category	Part Description	Part Number	Qty	Comments
1	RR SUSP KNUCKLE LH	Unrestricted	REAR SUSPENSION KNUCKLE - LEFT	1042506-00-B	1	For all RWD vehicles, and Dual Motor vehicles with coil suspension. OK to replace -A.
1	RR SUSP KNUCKLE LH, DM	Unrestricted	REAR SUSPENSION KNUCKLE - LEFT	1058539-00-B	1	For Dual Motor vehicles with air suspension. OK to replace -A.
1	RR SUSP KNUCKLE RH	Unrestricted	REAR SUSPENSION KNUCKLE - RIGHT	1042507-00-B	1	For all RWD vehicles, and Dual Motor vehicles with coil suspension. OK to replace -A.
1	RR SUSP KNUCKLE RH, DM	Unrestricted	REAR SUSPENSION KNUCKLE - RIGHT	1058540-00-B	1	For Dual Motor vehicles with air suspension. OK to replace -A.
2	RR SUSP HUB AND BEARING ASSY PERFORMANCE	Unrestricted	FRONT AND REAR HUB AND BEARING ASSEMBLY	1027170-00-A	2	
3	BOLT HF M12x1.5x55 [10.9]-U-G720	Unrestricted	BOLT, M12x1.5x55MM	2007066	8	Order in quantities of 50; minimum order: 50.
4	NUT LUG M14x1.50 [10]-CHR	Unrestricted	LUG NUT - M14x1.50 - CHROME	2007065	10	
4	LUG NUT COVER, BLACK	Unrestricted	LUG NUT COVER - BLACK	1023838-00-A	10	Order in quantities of 50; minimum order: 50.

Rear Stabilizer Bar and Links

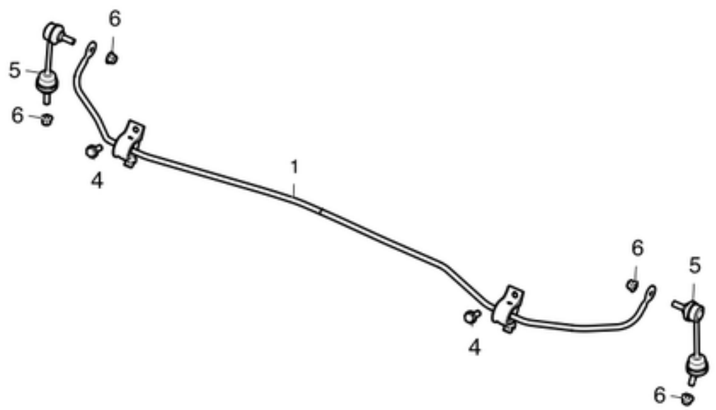

No	Part Name	Category	Part Description	Part Number	Qty	Comments
1	RR SUSP STABAR PASSIVE SUSP - S3, S2 w/ Air	Unrestricted	REAR SUSPENSION STABILIZER BAR - AIR SUSPENSION - SINGLE MOTOR	6007092-00-B	1	
1	RR STABAR ASSY, 20MM - REAR SUSPENSION	Unrestricted	STABAR - 20MM - COIL SUSPENISON - DUAL MOTOR	1043961-00-B	1	
1	RR STABAR ASSY, 21MM - REAR SUSPENSION	Unrestricted	STABAR - 21MM - AIR SUSPENSION - DUAL MOTOR	1043962-00-B	1	
4	BOLT HF M10x1.50x25 [10.9]-U-MP-G720	Unrestricted	BOLT HF M10x1.50x25	2007116	2	Order in quantities of 25; minimum order: 25.
5	RR SUSP STABAR LINK ASY	Unrestricted	REAR STABILIZER BAR LINK	6007100-00-A	2	For RWD vehicles with air suspension, and all Dual Motor vehicles.
6	NUT HFPT M10x1.25 [10]-G720	Unrestricted	NUT, M10x1.25	2007090-00-C	4	

Rear Suspension Arms

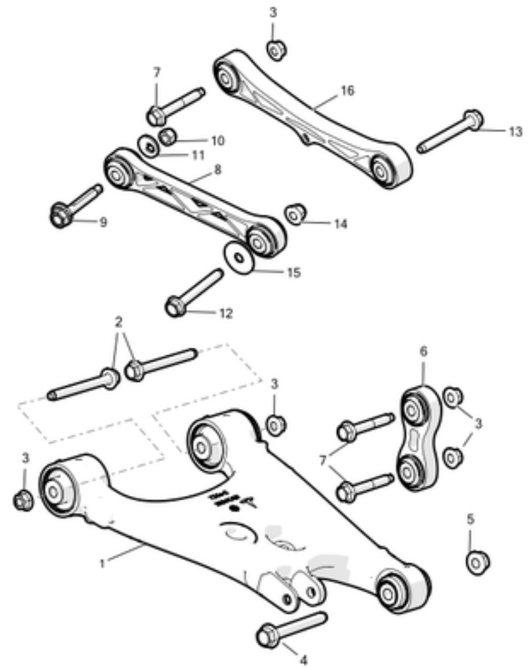

No	Part Name	Category	Part Description	Part Number	Qty	Comments
1	RR SUSP LCA ASSY	Unrestricted	REAR LOWER CONTROL ARM SUSPENSION ASSEMBLY	1027459-00-A	2	Both LH and RH arms must match. Do not use 1021416-00-A
2	BOLT HF M12x1.75x100 [10.9]-U-G720	Unrestricted	BOLT, M12x1.75x100MM	2007075	4	
3	NUT HF M12x1.75 [10]-G720	Unrestricted	NUT, M12x1.75MM	2007076	10	
4	BOLT HF M14x102 PC109	Unrestricted	BOLT M14 X 102	1056323-00-A	2	
5	NUT HF M14x2.00 [10]-G720	Unrestricted	NUT, M14x2.00	2007073	2	
6	RR SUSP INTEGRAL LINK ASSY	Unrestricted	REAR INTEGRAL LINK SUSPENSION ASSEMBLY - SINGLE MOTOR	6006895-00-A	2	
6	RR SUSP INTEGRAL LINK ASSY - Performance Plus	Unrestricted	REAR INTEGRAL LINK SUSPENSION ASSEMBLY - DUAL MOTOR	1021422-00-B	2	For all Dual Motor vehicles.
7	BOLT HF M12x1.75x70 [10.9]-U-G720	Unrestricted	BOLT, M12x1.75x70MM	2007078	6	
7	BOLT HF M12x1.75-70 [10.9] 9.8 SHNK	Unrestricted	BOLT, M12x1.75x70MM - 9.8MM SHAFT	2007078	**	Service only for Sub Frame alignment.
8	RR SUSP TOE LINK ASSY	Unrestricted	REAR TOE LINK SUSPENSION ASSEMBLY - SINGLE MOTOR	6006840-00-B	2	
8	RR SUSP TOE LINK ASSY - Performance Plus	Unrestricted	REAR TOE LINK SUSPENSION ASSEMBLY - DUAL MOTOR	1021420-00-A	2	For all Dual Motor vehicles.
8	REAR TOE LINK, X-AXIS	Unrestricted	REAR TOE LINK SUSPENSION ASSEMBLY - DUAL MOTOR	1043964-00-C	2	
9	BOLT H CAM M12x1.75x66 [10.9]-G720	Unrestricted	BOLT, HEX, CAM, M12x1.75x66MM	2007061	2	
10	NUT HPT M12x1.75 [10]-G720	Unrestricted	NUT, M12x1.75	2007089	2	
11	WASHER CAM M12x30x4x2.5 [10]-G720	Unrestricted	WASHER CAM M12x30x4x2.5MM	2007062	2	Order in quantities of 25; minimum order: 25.
12	BOLT HF M12x1.75x90 [10.9]-U-G720	Unrestricted	BOLT HF M12x1.75x90 [10.9]-U-G720	2007064	2	

13	BOLT HF M12x75 PC109	Unrestricted	BOLT HF M12x75 PC109	1043053-00-A	2	
14	NUT HFPT M12x1.75 [10]-G720	Unrestricted	NUT, M12x1.75	2007063-00-B	2	
15	WASHER FL M12x45x2.5 [10]-G720	Unrestricted	WASHER, FLAT, M12x45x2.5MM	2007077	2	Order in quantities of 25; minimum order: 25.
16	RR SUSP UPPER LINK ASSY	Unrestricted	REAR UPPER LINK SUSPENSION ASSEMBLY - SINGLE MOTOR	1027421-00-E	2	Option code: DV2W
16	REAR UPPER LINK, X-AXIS	Unrestricted	REAR UPPER LINK SUSPENSION ASSEMBLY - DUAL MOTOR	1043963-00-C	2	Option code: DV4W

AIR DISTRIBUTION

Coolant Reservoir

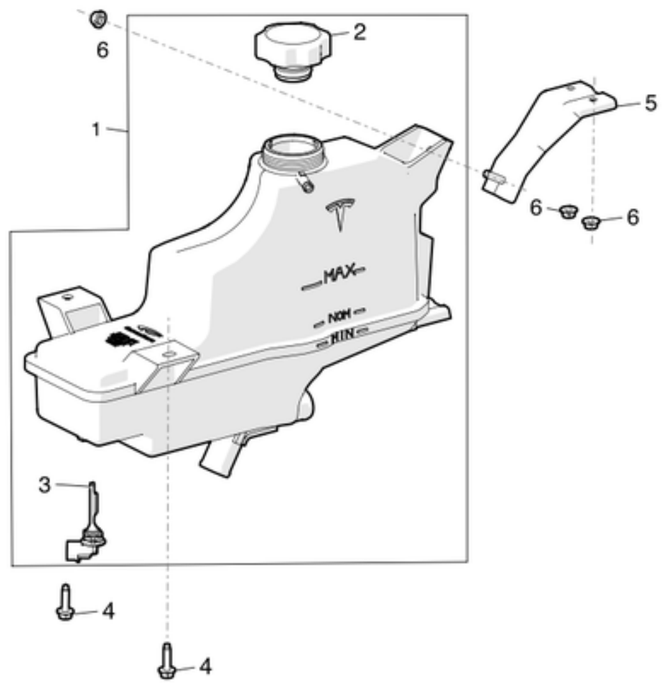

No	Part Name	Category	Part Description	Part Number	Qty	Comments
2	PRESSURE CAP - COOLANT RESERVOIR	Unrestricted	COOLANT RESERVOIR PRESSURE CAP	6007612-00-B	1	
3	SENSOR - COOLANT LEVEL	Unrestricted	COOLANT LEVEL SENSOR	6007598-00-A	1	
4	BLT HEX M6-1.00x25 [8.8] M ZnAl	Unrestricted	BOLT, HEX M6-1.00x25 ZINC ALUMINUM	1005817-00-A	2	
5	BRKT - RESERVOIR	Unrestricted	RESERVOIR BRACKET	1006420-00-B	1	
6	NUT HF M6-1.00[8]ZnAl	Unrestricted	NUT HEX M6-1.00 ZINC ALUMINUM	1005822-00-A	3	
*	COOLANT, ETHYLENE GLYCOL, 50/50 MIX - 1 gallon	Unrestricted	ETHYLENE GLYCOL COOLANT - 50/50 MIX - 1 GALLON	1029320-00-A	**	Unit of measure is each. 19 liters per vehicle.
*	COOLANT, ETHYLENE GLYCOL, 50/50 MIX - 55 gallon drum	Unrestricted	ETHYLENE GLYCOL COOLANT - 50/50 MIX - 55 GALLON DRUM	1061466-00-A	**	Unit of measure is milliliter. 19 liters per vehicle.

Cooling System Air Ducting

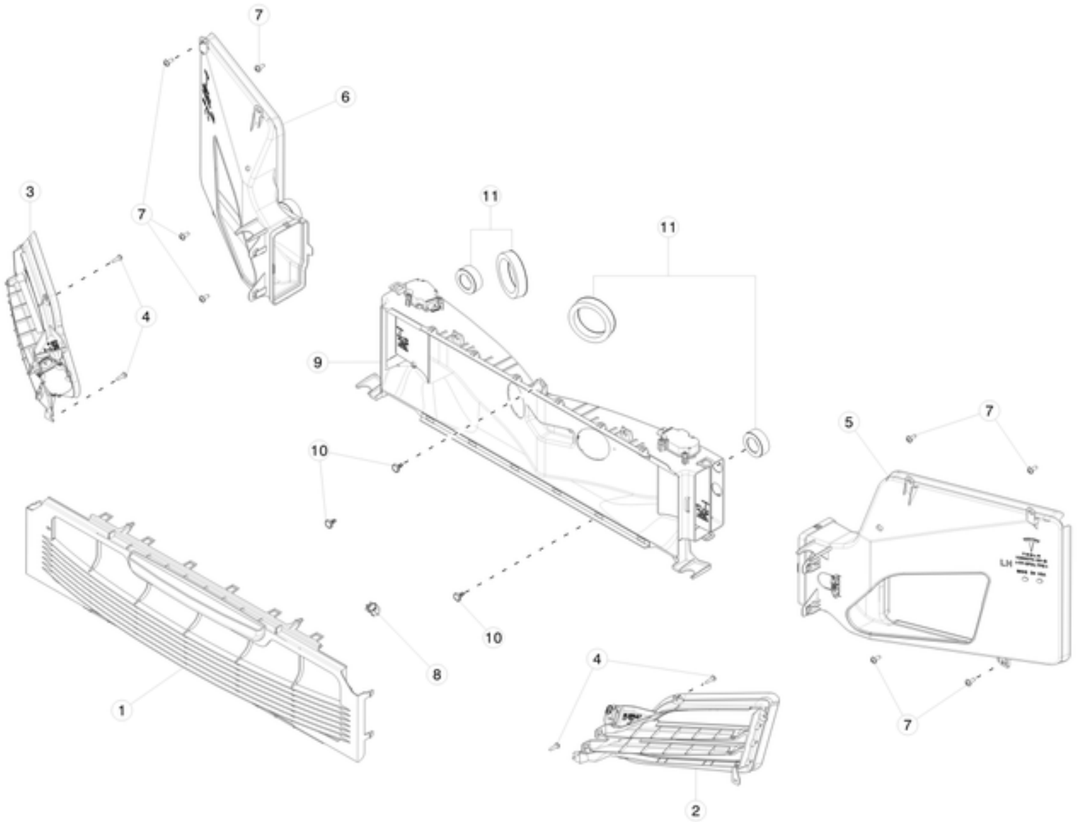

No	Part Name	Category	Part Description	Part Number	Qty	Comments
1	FRONT END FRONT DUCTING	Unrestricted	FRONT END DUCTING	1058022-00-B	1	
2	ASY - ACTIVE LOUVRE LH MS2	Unrestricted	ACTIVE LOUVER ASSEMBLY - LEFT	1057851-00-I	1	
3	ASY - ACTIVE LOUVRE RH	Unrestricted	ACTIVE LOUVER ASSEMBLY - RIGHT	1058007-00-I	1	
4	SCR ST WSHR M5 X 20 ZnNi	Unrestricted	SCR ST WSHR M5 X 20 ZnNi	1012809-00-A	4	
5	ASSY, DUCTING FR END RR LH	Unrestricted	REAR FRONT END DUCTING LEFT	1058023-00-C	1	
6	ASSY, DUCTING FR END RR RH	Unrestricted	REAR FRONT END DUCTING RIGHT	1058024-00-C	1	
7	SCR, M6x16,TRX,STL,Znc	Unrestricted	SCR, M6x16,TRX,STL,Znc	1008169-00-A	8	
8	SENSOR ASSEMBLY AMBIENT AIR TEMPERATURE	Unrestricted	AMBIENT AIR TEMPERATURE SENSOR ASSEMBLY	6007379-00-B	1	Order in quantities of 10; minimum order: 10.
9	ASY FR END DUCTING WITH HORNS, MS2	Unrestricted	FRONT END DUCTING WITH HORNS	1058073-00-B	1	
10	RVT PUSH-PULL 8X18X20.0	Unrestricted	RIVET PUSH-PULL 8X18X20.0	1006521-00-A	3	Order in quantities of 50; minimum order: 50.
*	GASKETS, SET, FRONT DUCTING	Unrestricted	FRONT DUCTING GASKET SET	1039348-00-A	2	
*	AIR QUALITY SENSOR	Unrestricted	AIR QUALITY SENSOR	1055747-00-E	1	

Radiator

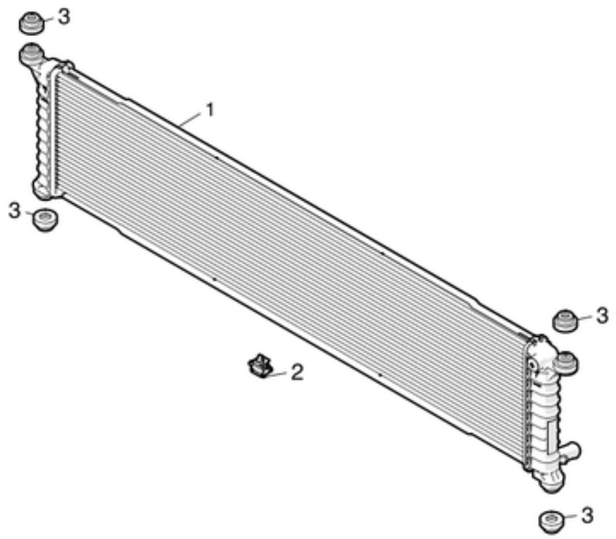

No	Part Name	Category	Part Description	Part Number	Qty	Comments
1	RADIATOR MOTOR PEM	Unrestricted	RADIATOR MOTOR PEM	1057999-00-B	1	
2	SNSR ASSY - AMBIENT AIR TEMP SNSR	Unrestricted	AMBIENT AIR TEMPERATURE SENSOR ASSEMBLY	6007379-00-B	1	Order in quantities of 10; minimum order: 10.
3	ISOLATOR - RAD MTG	Unrestricted	RADIATOR MOUNTING ISOLATOR	1042874-00-A	4	

CABIN HVAC

Blower Motor

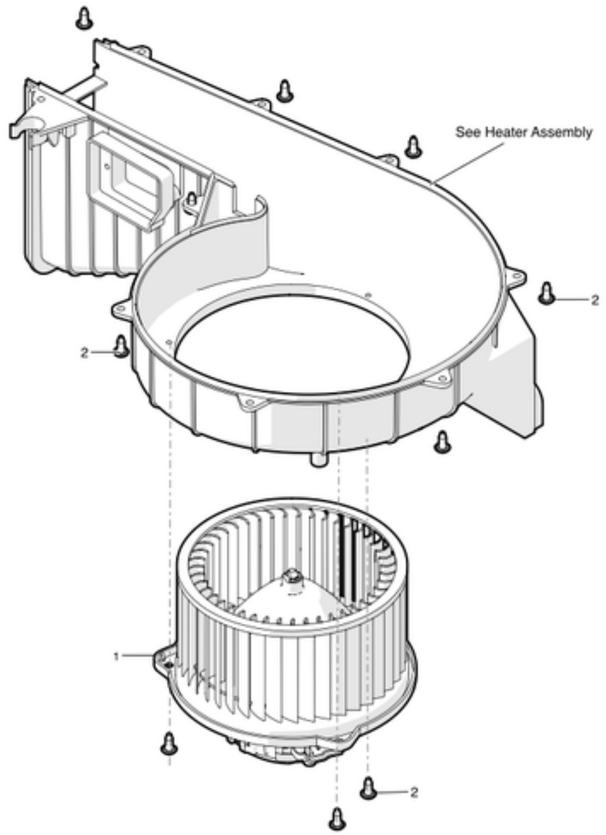

No	Part Name	Category	Part Description	Part Number	Qty	Comments
1	HVAC BLOWER ASY	Unrestricted	HVAC BLOWER ASY	1051864-00-A	1	
3	BLOWER CONTROLLER FET ASSY	Unrestricted		6008246-00-B	1	

Heater Assembly and Pollen Filter

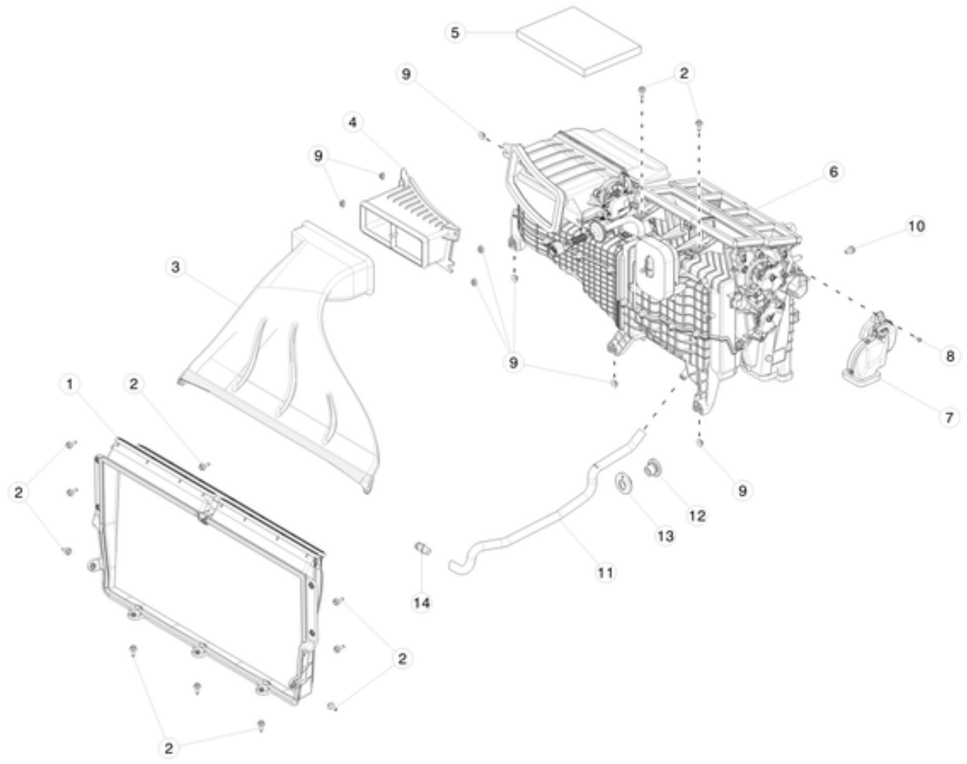

No	Part Name	Category	Part Description	Part Number	Qty	Comments
1	FILTER,HEPA,MS2	Unrestricted	FILTER,HEPA,MS2	1059333-00-D	1	
1	FILTER,NON-HEPA,MS2	Unrestricted	FILTER,NON-HEPA,MS2	1079168-00-A	1	
2	BLT HF M6x1.00x18 [8.8]-D-ZnAl-W	Unrestricted	BLT HF M6x1.00x18 [8.8]-D-ZnAl-W	1006529-00-A	12	
3	OUTLET DUCT,HEPA,HVAC,MS2 LHD	Unrestricted	OUTLET DUCT,HEPA,HVAC,MS2 LHD	1059335-00-B	1	
4	DUCT ADAPTER,HEPA,HVAC,MDL X LHD	Unrestricted	DUCT ADAPTER,HEPA,HVAC,LHD	1046211-89-G	1	
5	MS2 HVAC Carbon Filter	Unrestricted	MS2 HVAC Carbon Filter	1072736-00-B	1	
5	MS2 HVAC STANDARD FILTER	Unrestricted	MS2 HVAC STANDARD FILTER	1079290-00-A	1	
6	HVAC Unit Assy for MS2	Unrestricted	HVAC Unit Assy for MS2	1116135-00-A	1	OK to replace 1059591*.
7	DUCT- ADAPTOR, DR	Unrestricted	DUCT- ADAPTOR, DR	1008282-00-B	1	
8	SCR DUAL LEAD 4.8-1.59x12 [8.8]	Unrestricted	SCR DUAL LEAD 4.8-1.59x12 [8.8]	1021425-00-A	1	
9	NUT HEX M6-1.00 8 ZnAl 18 KEPS	Unrestricted	NUT HEX M6-1.00 8 ZnAl 18 KEPS	1005822-00-A	9	
10	BLT HF M8-1.25x16[8.8]ZnAl	Unrestricted	BLT HF M8-1.25x16[8.8]ZnAl	1005582-00-A	1	
*	HVAC DRAIN HOSE ASY	Unrestricted	HVAC DRAIN HOSE ASY	1031034-99-B	1	ASY includes part numbers 1077333-00-A and 1052480-00-C
11	MDL S,THERM SYS,HVAC DRAIN HOSE	Unrestricted	DRAIN HOSE	1077333-00-A	1	
12	MDL S,HVAC DRAIN HOSE,INNER GROMMET	Unrestricted	MDL S,HVAC DRAIN HOSE,INNER GROMMET	1031030-00-B	1	
13	MDL S,HVAC DRAIN HOSE,OUTER GROMMET	Unrestricted	MDL S,HVAC DRAIN HOSE,OUTER GROMMET	1031031-00-A	1	

14	NVH STOPPER,HVAC DRAIN TUBE,MDL S	Unrestricted	NVH STOPPER,HVAC DRAIN TUBE,MDL S	1052480-00-C	1	

Heater Core

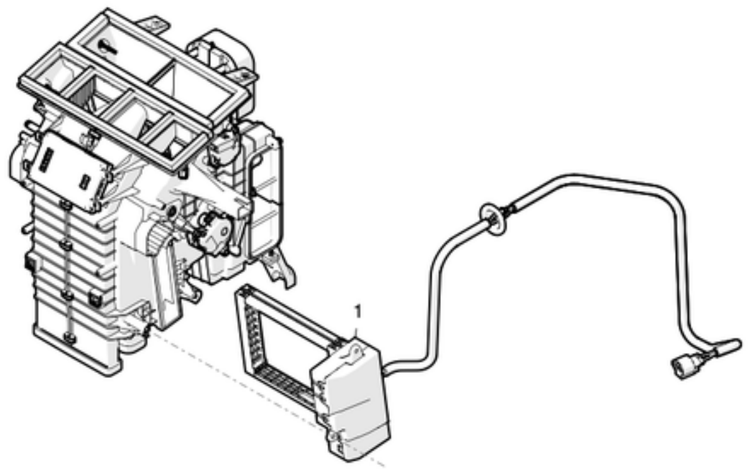

No	Part Name	Category	Part Description	Part Number	Qty	Comments
1	CORE COMPLETE ASSY - PTC AIR HEATER	Unrestricted	CORE COMPLETE ASSEMBLY - PTC AIR HEATER	1060432-00-C	1	OK to replace 6007385-00-*.
*	CONNECTOR, HV, PTC HEATER	Unrestricted	PTC HEATER HIGH VOLTAGE CONNECTOR	1025003-00-A	1	Might also need to replace 1021413-00-A.
*	REAR HOLDER for HV CONNECTOR	Unrestricted	REAR HOLDER FOR HIGH VOLTAGE CONNECTOR	1021413-00-A	1	Replacement blue rear holder for HV connectors. Connects to 1025003-00-A, 1025004-00-A, 1025005-00-A.

Heating and Ventilation Actuators (Motors)

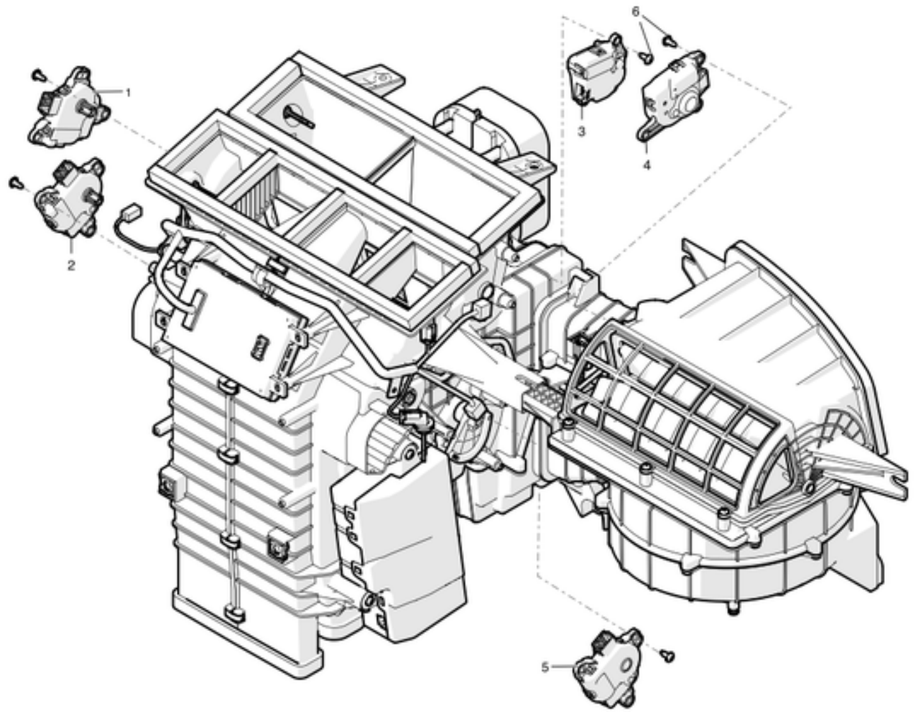

No	Part Name	Category	Part Description	Part Number	Qty	Comments
1	ACTUATOR ASSY - MODE	Unrestricted	ACTUATOR ASSEMBLY - MODE	6008248	1	
2	ACTUATOR ASSY - DRIVER TEMP	Unrestricted	ACTUATOR ASSEMBLY - DRIVER TEMPERATURE	6008243	1	
3	ACTUATOR ASSY - DEFROST	Unrestricted	ACTUATOR ASSEMBLY - DEFROST	6008245	1	
4	ACTUATOR ASSY - INLET	Unrestricted	ACTUATOR ASSEMBLY - INLET	1139238-00-A	1	
5	ACTUATOR ASSY - PASS TEMP	Unrestricted	ACTUATOR ASSEMBLY - PASSENGER TEMPERATURE	6008247	1	

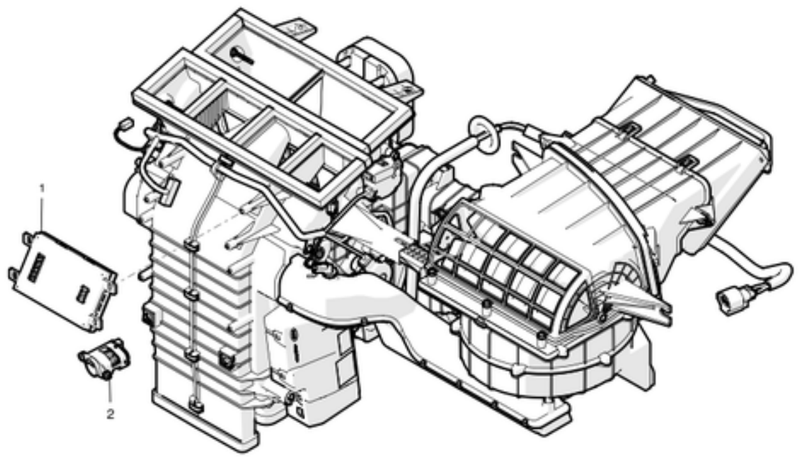

No	Part Name	Category	Part Description	Part Number	Qty	Comments
1	CONTROLLER - HVAC RCCM	Unrestricted	HVAC ROOM CLIMATE CONTROL MODULE CONTROLLER	6007366-00-C	1	
2	SENSOR ASSY - IN VEHICLE TEMP WITH HUMIDITY	Unrestricted	IN-VEHICLE TEMPERATURE AND HUMIDITY SENSOR	6007376-00-B	1	
*	TESLA THERMAL CONTROLLER	Unrestricted	THERMAL CONTROLLER - DUAL MOTOR	1034215-00-A	1	

COOLANT SYSTEM

Cooling System - Dual Motor - Front

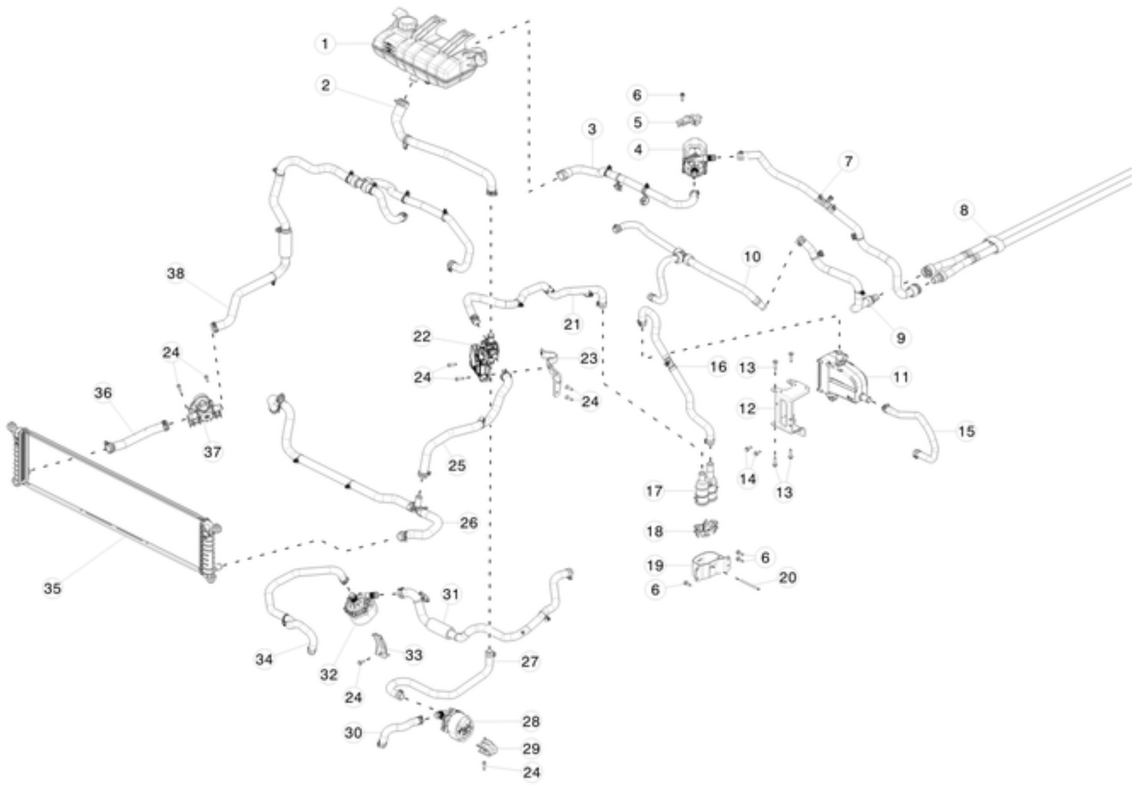

No	Part Name	Category	Part Description	Part Number	Qty	Comments
1	ASY,COOLANT BOTTLE,DM,MDL S+X	Unrestricted	ASY,COOLANT BOTTLE,DM,MDL S+X	1036124-00-D	1	
2	ASY,HOSE,RSRVR-4WVLV,PT,DM,MDL S	Unrestricted	ASY,HOSE,RSRVR-4WVLV,PT,DM,MDL S	1030816-00-E	1	
3	HOSE (PT), RSVR TO PUMP 1, MS2	Unrestricted	HOSE (PT), RSVR TO PUMP 1, MS2	1066686-00-B	1	
4	COOLANT PUMP ASSY, BWD ISO, 185*	Unrestricted	COOLANT PUMP ASSY, BWD ISO, 185*	1057235-00-G	1	
5	MDL S,DM,DRV,PUMP1 BRKT	Unrestricted	MDL S,DM,DRV,PUMP1 BRKT	1037869-00-A	1	
6	BOLT HF M6x1.00x16 DP [8.8]	Unrestricted	BOLT HF M6x1.00x16 DP [8.8]	1004341-00-B	4	
7	HOSE (PT), PUMP1 TO ROCKER, MS2	Unrestricted	HOSE (PT), PUMP1 TO ROCKER, MS2	1065884-00-C	1	
8	HOSE (PT), LH ROCKER BUNDLE, MS2	Unrestricted	HOSE (PT), LH ROCKER BUNDLE, MS2	1065887-00-D	1	
9	HOSE (PT), LH ROCKER TO TORQUEBOX, MS2	Unrestricted	HOSE (PT), LH ROCKER TO TORQUEBOX, MS2	1072148-00-B	1	
10	HOSE (PT), FDU INLET, MS2	Unrestricted	HOSE (PT), FDU INLET, MS2	1065858-00-C	1	
11	MDL S, DM, THERM SYS, ELEC BATT HEATER	Unrestricted	MDL S, DM, THERM SYS, ELEC BATT HEATER	1038901-00-H	1	
12	BATT HTR BRKT,MDL S	Unrestricted	BATT HTR BRKT,MDL S	1028688-00-F	1	For vehicles built before August 21st, 2017. Option Code APH2
12	BATT HTR TOP BRKT, MDL S	Unrestricted	BATT HTR TOP BRKT, MDL S	1126940-99-C	1	For vehicles built on or after August 21st, 2017. Option Code APH3
12	BATT HTR BOTTOM BRKT, MDL S	Unrestricted	BBATT HTR BOTTOM BRKT, MDL S	1126941-99-B	1	For vehicles built on or after August 21st, 2017. Option Code APH3
13	BLT HEX M6-1.00x25 [8.8] M ZnAl	Unrestricted	BLT HEX M6-1.00x25 [8.8] M ZnAl	1005817-00-A	4	

14	BLT HEX FL M6-1.25x16 8.8 -M-ZnAl	Unrestricted	BLT HEX FL M6-1.25x16 8.8 -M-ZnAl	1006381-00-A	2	
15	HOSE (BATT), DCDC TO HEATER, MS2	Unrestricted	HOSE (BATT), DCDC TO HEATER, MS2	1065813-00-B	1	
16	HOSE (BATT), HEATER TO HVBATT, MS2	Unrestricted	HOSE (BATT), HEATER TO HVBATT, MS2	1065812-00-B	1	
17	ASY,VALVE,COOLANT CX,VEH SIDE,MDLS	Unrestricted	ASY,VALVE,COOLANT CX,VEH SIDE,MDLS	6010350-00-F	1	
18	LEAF SPRING,VEHICLE,COOLANT CX,MDLS	Unrestricted	LEAF SPRING,VEHICLE,COOLANT CX,MDLS	6010473-00-C	1	
19	CAGE,VEHICLE,COOLANT CX,MDLS	Unrestricted	CAGE,VEHICLE,COOLANT CX,MDLS	6010472-00-E	1	
20	PIN,VEHICLE,COOLANT CX,MDLS	Unrestricted	PIN,VEHICLE,COOLANT CX,MDLS	6010459-00-B	1	
21	HOSE (BATT), HVBATT TO 4WVLV, MS2	Unrestricted	HOSE (BATT), HVBATT TO 4WVLV, MS2	1065814-00-C	1	
22	VALVE 4-WAY	Unrestricted	VALVE 4-WAY	6007370-00-B	1	
23	MDL S,DM,DRV,4WVLV BRKT	Unrestricted	MDL S,DM,DRV,4WVLV BRKT	1031699-00-C	1	
24	BLT TRX MP M6-1.00x20 D12 [8.8] ZnAL	Unrestricted	BLT TRX MP M6-1.00x20 D12 [8.8] ZnAL	1005814-00-A	8	
25	ASY,HOSE,3WVLV-4WVLV,PT,DM,MDL S	Unrestricted	ASY,HOSE,3WVLV-4WVLV,PT,DM,MDL S	1030810-00-C	1	
26	HOSE (PT), RADIATOR BYPASS, MS2	Unrestricted	HOSE (PT), RADIATOR BYPASS, MS2	1058614-00-C	1	
27	HOSE (BATT), 4WVLV TO PUMP1, MS2	Unrestricted	HOSE (BATT), 4WVLV TO PUMP1, MS2	1065818-00-C	1	
28	COOLANT PUMP ASSY, FWD ISO, 32*	Unrestricted	COOLANT PUMP ASSY, FWD ISO, 32*	1035348-00-G	1	
29	BRKT, BATT PUMP 1, MS2	Unrestricted	BRKT, BATT PUMP 1, MS2	1068763-00-C	1	
30	HOSE (BATT), PUMP1 TO CHILLER, MS2	Unrestricted	HOSE (BATT), PUMP1 TO CHILLER, MS2	1065817-00-C	1	
31	HOSE (BATT), PUMP2 TO DCDC, MS2	Unrestricted	HOSE (BATT), PUMP2 TO DCDC, MS2	1065815-00-C	1	
32	COOLANT PUMP ASSY, FWD ISO, 212*	Unrestricted	COOLANT PUMP ASSY, FWD ISO, 212*	1037327-00-G	1	
33	BATTPUMP2_MOUNT	Unrestricted	BATTPUMP2_MOUNT	1067762-00-B	1	
34	HOSE (BATT), CHILLER TO PUMP2, MS2	Unrestricted	HOSE (BATT), CHILLER TO PUMP2, MS2	1065816-00-B	1	
35	RADIATOR MOTOR PEM, MS2	Unrestricted	RADIATOR MOTOR PEM, MS2	1057999-00-B	1	
36	HOSE (PT), 3WVLV TO RAD ASSY, MS	Unrestricted	HOSE (PT), 3WVLV TO RAD ASSY, MS	6007343-00-D	1	
37	VALVE 3-WAY	Unrestricted	VALVE 3-WAY	6007384-00-C	1	
38	ASY,HOSE,FDU-3WVLV,PT,DM,MDL S	Unrestricted	ASY,HOSE,FDU-3WVLV,PT,DM,MDL S	1031697-00-F	1	

Cooling System - Dual Motor - Rear

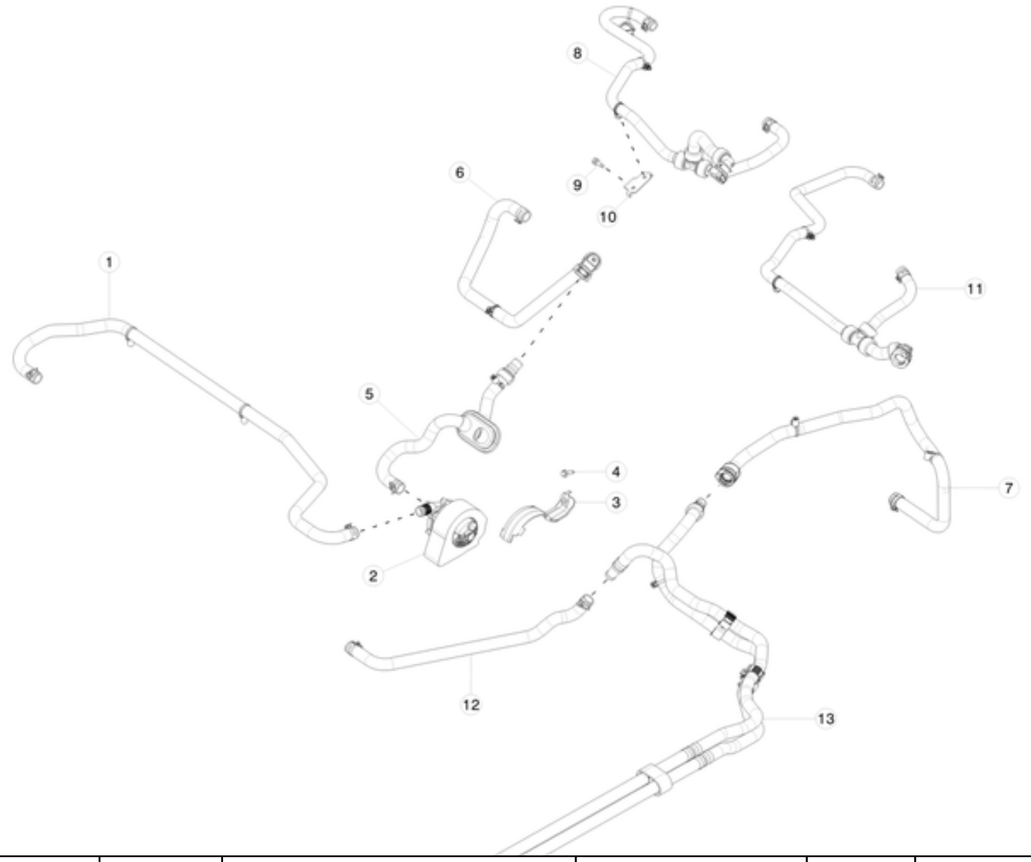

No	Part Name	Category	Part Description	Part Number	Qty	Comments
1	HOSE (PT), PUMP 2 TO CHARGER, MS2	Unrestricted	HOSE (PT), PUMP 2 TO CHARGER, MS2	1065387-00-C	1	
2	COOLANT PUMP ASSY, FOAM ISOLATED	Unrestricted	COOLANT PUMP ASSY, FOAM ISOLATED	1067473-00-G	1	
3	BRKT, PT PUMP 2, MS2	Unrestricted	BRKT, PT PUMP 2, MS2	1069076-00-B	1	
4	BLT HF M6-1.00x20[8.8]ZnAlW	Unrestricted	BLT HF M6-1.00x20[8.8]ZnAlW	1009420-00-A	1	
5	HOSE (PT), RDU TO PUMP 2, MS2	Unrestricted	HOSE (PT), RDU TO PUMP 2, MS2	1065389-00-D	1	
6	HOSE (PT), LRDU OUTLET, MS2	Unrestricted	HOSE (PT), LRDU OUTLET, MS2	1058001-00-C	1	
7	HOSE (PT), LRDU INLET, MS2	Unrestricted	HOSE (PT), LRDU INLET, MS2	1058669-00-C	1	
8	HOSE (PT), SRDU OUTLET, MS2	Unrestricted	HOSE (PT), SRDU OUTLET, MS2	1058000-00-C	1	
9	BOLT HF M6x1.00x16 DP [8.8]	Unrestricted	BOLT HF M6x1.00x16 DP [8.8]	1004341-00-B	1	
10	BRACKET,HOSES,EXT,3.0-150R	Unrestricted	BRACKET,HOSES,EXT,3.0-150R	1049414-00-B	1	
11	HOSE (PT), SRDU INLET, MS2	Unrestricted	HOSE (PT), SRDU INLET, MS2	1058668-00-C	1	
12	HOSE (PT), CHARGER OUTLET, MS2	Unrestricted	HOSE (PT), CHARGER OUTLET, MS2	1065388-00-C	1	
13	HOSE (PT), LH ROCKER BUNDLE, MS2	Unrestricted	HOSE (PT), LH ROCKER BUNDLE, MS2	1065887-00-D	1	

Cooling System - Rear Wheel Drive - Front

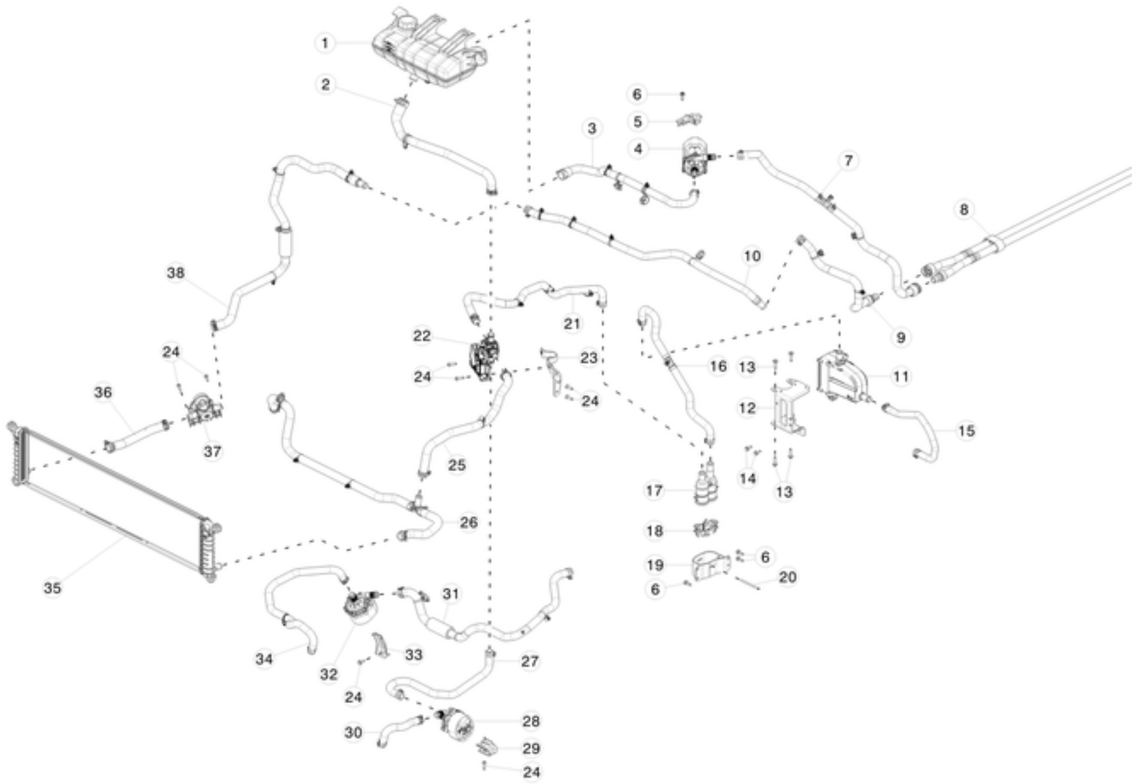

No	Part Name	Category	Part Description	Part Number	Qty	Comments
1	ASY,COOLANT BOTTLE,DM,MDL S+X	Unrestricted	ASY,COOLANT BOTTLE,DM,MDL S+X	1036124-00-D	1	
2	ASY,HOSE,RSRVR-4WVLV,PT,DM,MDL S	Unrestricted	ASY,HOSE,RSRVR-4WVLV,PT,DM,MDL S	1030816-00-E	1	
3	HOSE (PT), RSVR TO PUMP 1, MS2	Unrestricted	HOSE (PT), RSVR TO PUMP 1, MS2	1066686-00-B	1	
4	COOLANT PUMP ASSY, BWD ISO, 185*	Unrestricted	COOLANT PUMP ASSY, BWD ISO, 185*	1057235-00-G	1	
5	MDL S,DM,DRV,PUMP1 BRKT	Unrestricted	MDL S,DM,DRV,PUMP1 BRKT	1037869-00-A	1	
6	BOLT HF M6x1.00x16 DP [8.8]	Unrestricted	BOLT HF M6x1.00x16 DP [8.8]	1004341-00-B	4	
7	HOSE (PT), PUMP1 TO ROCKER, MS2	Unrestricted	HOSE (PT), PUMP1 TO ROCKER, MS2	1065884-00-C	1	
8	HOSE (PT), LH ROCKER BUNDLE, MS2	Unrestricted	HOSE (PT), LH ROCKER BUNDLE, MS2	1065887-00-D	1	
9	HOSE (PT), LH ROCKER TO TORQUEBOX, MS2	Unrestricted	HOSE (PT), LH ROCKER TO TORQUEBOX, MS2	1072148-00-B	1	
10	HOSE (PT), FDU INLET, MS2	Unrestricted	HOSE (PT), FDU INLET, MS2	1067857-00-E	1	
11	MDL S, DM, THERM SYS, ELEC BATT HEATER	Unrestricted	MDL S, DM, THERM SYS, ELEC BATT HEATER	1038901-00-H	1	
12	BATT HTR BRKT,MDL S	Unrestricted	BATT HTR BRKT,MDL S	1028688-00-F	1	For vehicles built before August 21st, 2017. Option Code APH2
12	BATT HTR TOP BRKT, MDL S	Unrestricted	BATT HTR TOP BRKT, MDL S	1126940-99-C	1	For vehicles built on or after August 21st, 2017. Option Code APH3
12	BATT HTR BOTTOM BRKT, MDL S	Unrestricted	BBATT HTR BOTTOM BRKT, MDL S	1126941-99-B	1	For vehicles built on or after August 21st, 2017. Option Code APH3
13	BLT HEX M6-1.00x25 [8.8] M ZnAl	Unrestricted	BLT HEX M6-1.00x25 [8.8] M ZnAl	1005817-00-A	4	
14	BLT HEX FL M6-1.25x16 8.8 -M-ZnAl	Unrestricted	BLT HEX FL M6-1.25x16 8.8 -M-ZnAl	1006381-00-A	2	

15	HOSE (BATT), DCDC TO HEATER, MS2	Unrestricted	HOSE (BATT), DCDC TO HEATER, MS2	1065813-00-B	1	
16	HOSE (BATT), HEATER TO HVBATT, MS2	Unrestricted	HOSE (BATT), HEATER TO HVBATT, MS2	1065812-00-B	1	
17	ASY,VALVE,COOLANT CX,VEH SIDE,MDLS	Unrestricted	ASY,VALVE,COOLANT CX,VEH SIDE,MDLS	6010350-00-F	1	
18		Unrestricted		6010473-00-C	1	
19		Unrestricted		6010472-00-E	1	
20		Unrestricted		6010459-00-B	1	
21	HOSE (BATT), HVBATT TO 4WVLV, MS2	Unrestricted	HOSE (BATT), HVBATT TO 4WVLV, MS2	1065814-00-C	1	
22	VALVE 4-WAY	Unrestricted	VALVE 4-WAY	6007370-00-B	1	
23	MDL S,DM,DRV,4WVLV BRKT	Unrestricted	MDL S,DM,DRV,4WVLV BRKT	1031699-00-C	1	
24	BLT TRX MP M6-1.00x20 D12 [8.8] ZnAL	Unrestricted	BLT TRX MP M6-1.00x20 D12 [8.8] ZnAL	1005814-00-A	8	
25	ASY,HOSE,3WVLV-4WVLV,PT,DM,MDL S	Unrestricted	ASY,HOSE,3WVLV-4WVLV,PT,DM,MDL S	1030810-00-C	1	
26	HOSE (PT), RADIATOR BYPASS, MS2	Unrestricted	HOSE (PT), RADIATOR BYPASS, MS2	1058614-00-C	1	
27	HOSE (BATT), 4WVLV TO PUMP1, MS2	Unrestricted	HOSE (BATT), 4WVLV TO PUMP1, MS2	1065818-00-C	1	
28	COOLANT PUMP ASSY, FWD ISO, 32*	Unrestricted	COOLANT PUMP ASSY, FWD ISO, 32*	1035348-00-G	1	
29	BRKT, BATT PUMP 1, MS2	Unrestricted	BRKT, BATT PUMP 1, MS2	1068763-00-C	1	
30	HOSE (BATT), PUMP1 TO CHILLER, MS2	Unrestricted	HOSE (BATT), PUMP1 TO CHILLER, MS2	1065817-00-C	1	
31	HOSE (BATT), PUMP2 TO DCDC, MS2	Unrestricted	HOSE (BATT), PUMP2 TO DCDC, MS2	1065815-00-C	1	
32	COOLANT PUMP ASSY, FWD ISO, 212*	Unrestricted	COOLANT PUMP ASSY, FWD ISO, 212*	1037327-00-G	1	
33	BATTPUMP2_MOUNT	Unrestricted	BATTPUMP2_MOUNT	1067762-00-B	1	
34	HOSE (BATT), CHILLER TO PUMP2, MS2	Unrestricted	HOSE (BATT), CHILLER TO PUMP2, MS2	1065816-00-B	1	
35	RADIATOR MOTOR PEM, MS2	Unrestricted	RADIATOR MOTOR PEM, MS2	1057999-00-B	1	
36	HOSE (PT), 3WVLV TO RAD ASSY, MS	Unrestricted	HOSE (PT), 3WVLV TO RAD ASSY, MS	6007343-00-D	1	
37	VALVE 3-WAY	Unrestricted	VALVE 3-WAY	6007384-00-C	1	
38	ASY,HOSE,FDU-3WVLV,PT,DM,MDL S	Unrestricted	ASY,HOSE,FDU-3WVLV,PT,RWD,MDL S	1067864-00-B	1	

Cooling System - Rear Wheel Drive - Rear

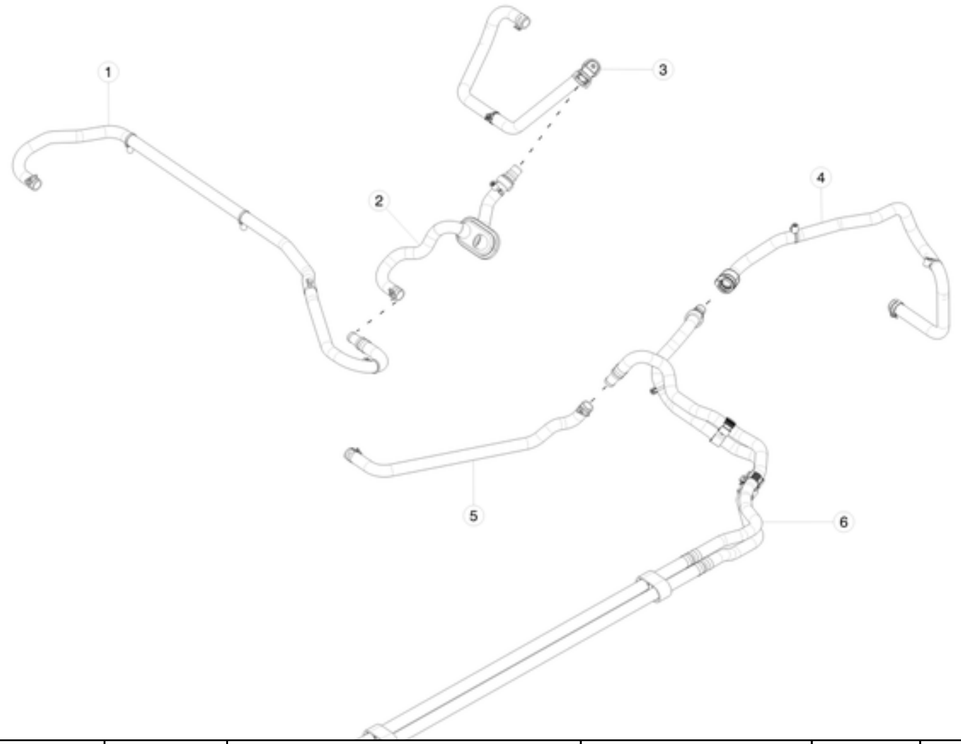

No	Part Name	Category	Part Description	Part Number	Qty	Comments
1	HOSE (PT), CHARGER INLET (NO PUMP2), MS2	Unrestricted	HOSE (PT), CHARGER INLET (NO PUMP2), MS2	1071610-00-B	1	
2	HOSE (PT), RDU TO PUMP 2, MS2	Unrestricted	HOSE (PT), RDU TO PUMP 2, MS2	1065389-00-D	1	
3	HOSE (PT), LRDU OUTLET, MS2	Unrestricted	HOSE (PT), LRDU OUTLET, MS2	1058001-00-C	1	
4	HOSE (PT), LRDU INLET, MS2	Unrestricted	HOSE (PT), LRDU INLET, MS2	1058669-00-C	1	
5	HOSE (PT), CHARGER OUTLET, MS2	Unrestricted	HOSE (PT), CHARGER OUTLET, MS2	1065388-00-C	1	
6	HOSE (PT), LH ROCKER BUNDLE, MS2	Unrestricted	HOSE (PT), LH ROCKER BUNDLE, MS2	1065887-00-D	1	

REFRIGERANT SYSTEM

Air Conditioning Condenser

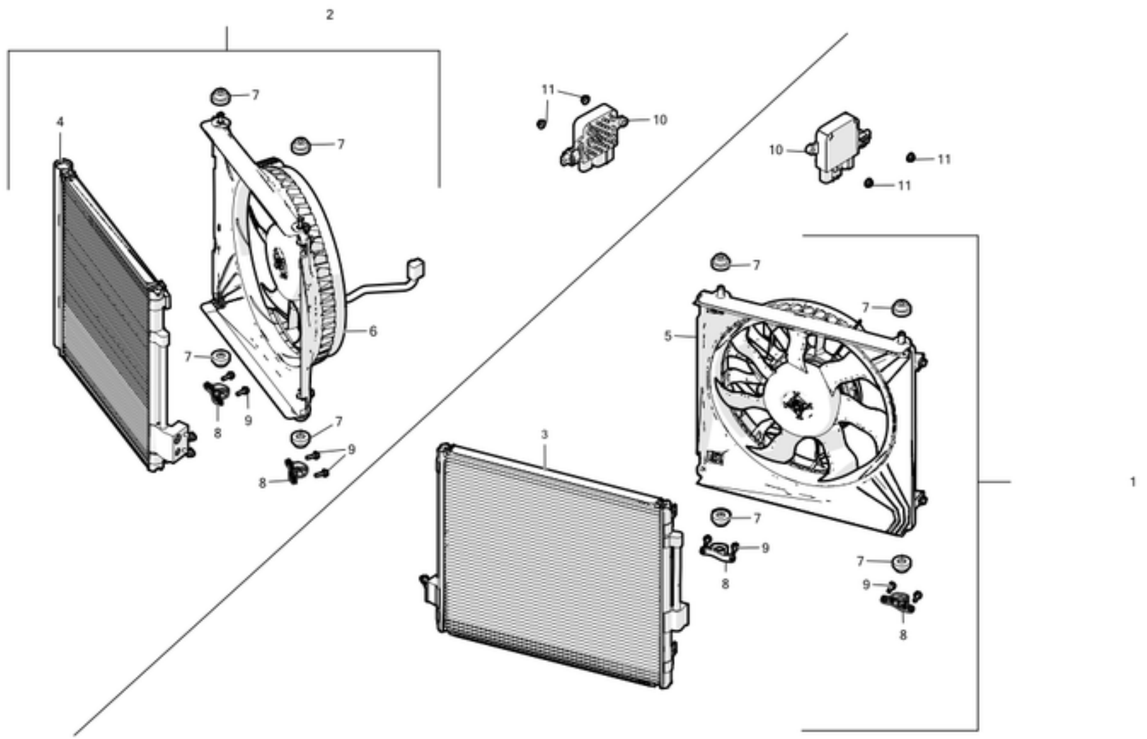

No	Part Name	Category	Part Description	Part Number	Qty	Comments
1	ASY, CONDENSER-FAN MODULE, GAS COOL	Unrestricted	GAS COOL CONDENSER FAN MODULE ASSEMBLY	6007352-00-F	1	Left side
2	ASY, CONDENSER-FAN MODULE, SUB COOL	Unrestricted	SUB COOL CONDENSER FAN MODULE ASSEMBLY	6008357-00-F	1	Right side.
3	CONDENSER CORE, GAS COOL	Unrestricted	GAS COOL CONDENSER CORE	6007610-00-B	1	Left side - Condenser only.
4	CONDENSER CORE, SUBCOOL	Unrestricted	SUBCOOL CONDENSER CORE	6007613-00-B	1	Right side - Condenser only.
5	FAN SHROUD ASSY, GAS COOL	Unrestricted	GAS COOL FAN SHROUD ASSEMBLY	6007614-00-D	1	
6	FAN SHROUD ASSY, SUBCOOL	Unrestricted	SUBCOOL FAN SHROUD ASSEMBLY	6008358-00-D	1	
7	ISOLATOR - RAD MTG	Unrestricted	RADIATOR MOUNTING ISOLATOR	1042874-00-A	8	
8	Condenser bracket	Unrestricted	CONDENSER BRACKET	1006201-00-B	4	
9	PRESSURE SENSOR FASTENER	Unrestricted	SCREW, M5x16 TORX SOCKET HEAD	1004646-00-A	8	Order in quantities of 25; minimum order: 25.
10	CONTROLLER - FAN PWM	Unrestricted	PWM FAN CONTROLLER	6008953-00-B	2	
11	NUT HF M6-1.00[8]ZnAl	Unrestricted	NUT M6-1.00 ZINC ALUMINUM	2007207	4	Order in quantities of 25; minimum order: 25.
*	CAP - RECEIVER AND DRYER	Unrestricted	RECEIVER AND DRYER CAP	1007718-00-A	1	
*	DESICCANT BAG - SUBCOOL CONDENSER, 37g	Unrestricted	SUBCOOL CONDENSOR DESICCANT BAG - 37G	1007717-00-A	1	

Air Conditioning Pipes and Hoses

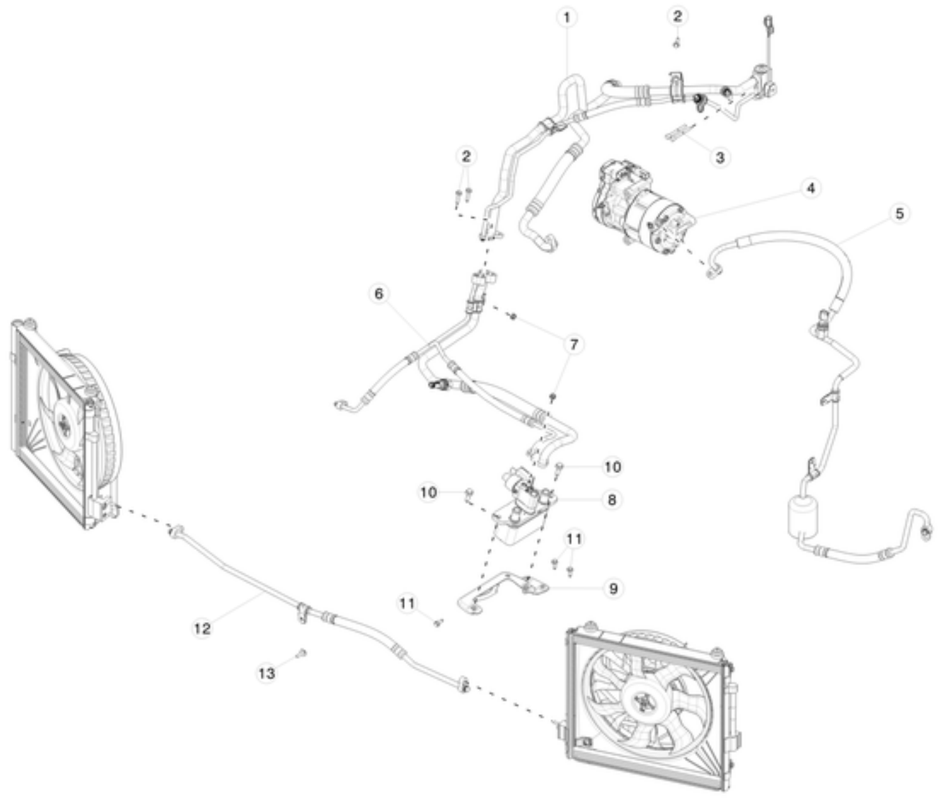

No	Part Name	Category	Part Description	Part Number	Qty	Comments
1	AC LINE ASY,R134a,SUCT LIQ TXV,DM,MDL S	Unrestricted	AC LINE ASY,R134a,SUCT LIQ TXV,DM,MDL S	1031670-00-I	1	Option code: DV4W
1	AC Line W/TXV, R134a Option	Unrestricted	AC Line W/TXV, R134a Option	1069094-00-B	1	Option code: DV2W
2	BLT HEX M6-1.00x25 [8.8] M ZnAl	Unrestricted	BLT HEX M6-1.00x25 [8.8] M ZnAl	1005817-00-A	3	
3	BLT TRX M6-1.00x60 8.8 M ZnAl	Unrestricted	BLT TRX M6-1.00x60 8.8 M ZnAl	1005810-00-A	2	
4	A/C COMPRESSOR, ELECTRIC, NO RHVAC	Unrestricted	A/C COMPRESSOR, ELECTRIC, NO RHVAC	1063369-00-G	1	
5	ASY,AC LINE,DISCHARGE,DM,MDL S	Unrestricted	ASY,AC LINE,DISCHARGE,DM,MDL S	1031671-00-I	1	Option code: DV4W
5	AC LINE, COMPRESSOR DISCHARGE LINE	Unrestricted	AC Line, COMPRESSOR DISCHARGE LINE	1069093-00-C	1	Option code: DV2W
6	AC LINE ASY,LWR LIQ and CHLR, MDL S2	Unrestricted	AC LINE ASY,LWR LIQ and CHLR, MDL S2	1062583-00-C	1	
7	NUT HF M6-1.00[8]ZnAl	Unrestricted	NUT HF M6-1.00[8]ZnAl	2007207	2	
8	ASSY, BATT CHILLER AND EXV	Unrestricted	ASSY, BATT CHILLER AND EXV	1037357-00-F	1	
*	MSX_EXV coil	Unrestricted	EXV Motor coil and controller - Service Kit	1142538-00-A	1	Contains one EXV Controller/Motor (1144540-00-A) and one EXV attachment screw (1144541-00-A)
*	O-RING, HNBR, 12.22 x 2.48	Unrestricted	O-RING, HNBR, 12.22 x 2.48	1010832-00-A	1	
*	O-RING, HNBR 6.07 x 2.18	Unrestricted	O-RING, HNBR 6.07 x 2.18	1024772-00-A	1	
*	O-RING, HNBR 15.22 x 2.48	Unrestricted	O-RING, HNBR 15.22 x 2.48	1024770-00-A	1	
9	BRKT, CHILLER, FR SUBF, MS2	Unrestricted	BRKT, CHILLER, FR SUBF, MS2	1027569-00-D	1	
10	BLT HEX FL M8-1.25X25 8.8 -M-ZnAl	Unrestricted	BLT HEX FL M8-1.25X25 8.8 -M-ZnAl	1005805-00-A	2	
11	BLT HEX FL M6-1.25x16 8.8 -M-ZnAl	Unrestricted	BLT HEX FL M6-1.25x16 8.8 -M-ZnAl	1006381-00-A	3	

12	AC LINE, CONDENSER 1 TO CONDENSER 2	Unrestricted	AC LINE, CONDENSER 1 TO CONDENSER 2	6007733-00-A	1	
13	BLT HEX WSHR MG6-2.0x23.3	Unrestricted	BLT HEX WSHR MG6-2.0x23.3	1008970-00-A	1	

Compressor

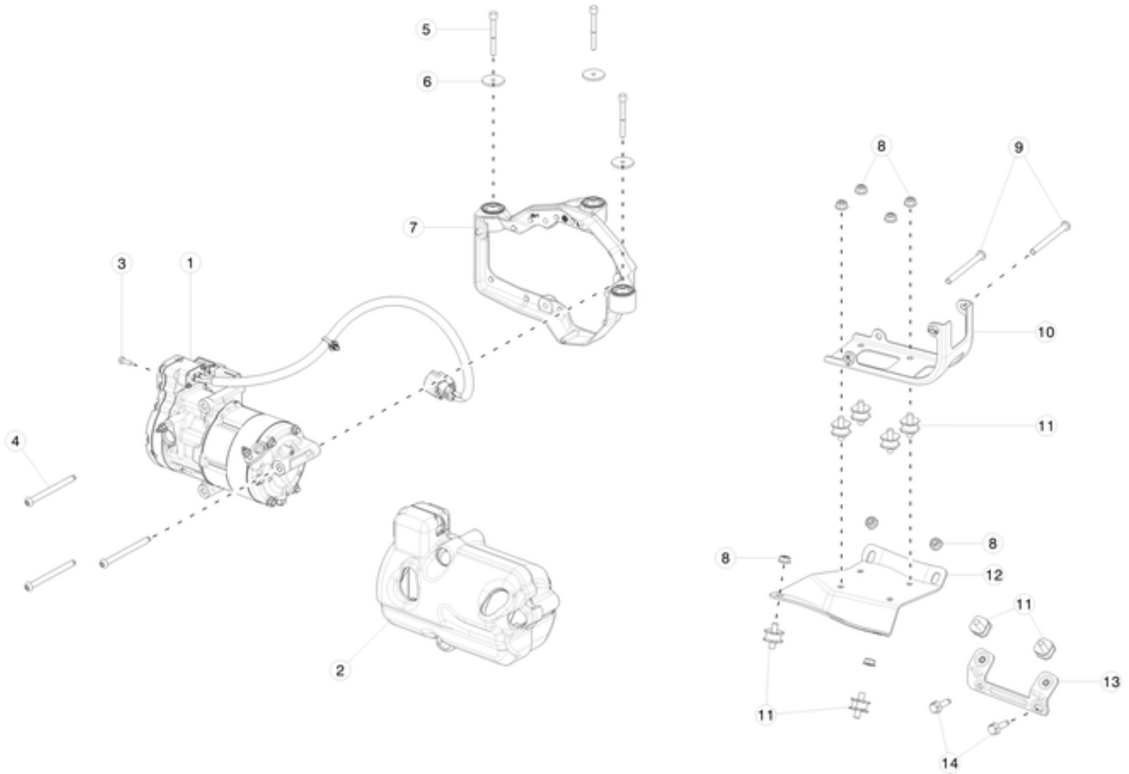

No	Part Name	Category	Part Description	Part Number	Qty	Comments
1	A/C COMPRESSOR, ELECTRIC, NO RHVAC	Unrestricted	A/C COMPRESSOR, ELECTRIC, NO RHVAC	1063369-00-G	1	For vehicles with option code: DV4W.
2	HVCC COMPRESSOR NVH COVER,MDL S	Unrestricted	HVCC COMPRESSOR NVH COVER,MDL S	1032116-00-E	1	
3	SCREW, M5x16 TORX SCKT HEAD	Unrestricted	SCREW, M5x16 TORX SCKT HEAD	1004646-00-A	1	
4	BOLT PN M8x100 PC88 MAT	Unrestricted	BOLT PN M8x100 PC88 MAT	1041441-00-A	3	
5	BLT TRX M6-1.00x60 8.8 M ZnAl	Unrestricted	BLT TRX M6-1.00x60 8.8 M ZnAl	1005810-00-A	3	
6	WASHER M6x32x3	Unrestricted	WASHER M6x32x3	1038490-00-A	3	
7	COMP ISO SYSTEM,THERM SYS,DM,MDL S	Unrestricted	COMP ISO SYSTEM,THERM SYS,DM,MDL S	1038521-00-E	1	
8	NUT,M8-1.25,HF,Steel[10],ZnAl,BLACK	Unrestricted	NUT,M8-1.25,HF,Steel[10],ZnAl,BLACK	1006628-01-A	8	
9	BOLT PN M8x97 PC88	Unrestricted	BOLT PN M8x97 PC88	1009486-00-B	2	
10	BRKT AC COMP TO AC BRKT - HVCC	Unrestricted	BRKT AC COMP TO AC BRKT - HVCC	1028402-00-C	1	
11	ISOLATOR, COMPRESSOR BRKT DIAGONAL	Unrestricted	ISOLATOR, COMPRESSOR BRKT DIAGONAL	1007055-00-C	8	
12	BRKT, AC COMP BRKT TO SUBFRAME, MS2 RWD	Unrestricted	BRKT, AC COMP BRKT TO SUBFRAME, MS2 RWD	1068997-00-B	1	
13	BRKT, CHILLER, FR SUBF, MS2	Unrestricted	BRKT, CHILLER, FR SUBF, MS2	1071453-00-B	1	
14	BLT HEX FL M8-1.25X25 8.8 -M-ZnAl	Unrestricted	BLT HEX FL M8-1.25X25 8.8 -M-ZnAl	1005805-00-A	2	

TIRE PRESSURE MONITORING SYSTEM (TPMS)

Tire Pressure Monitoring System (TPMS)

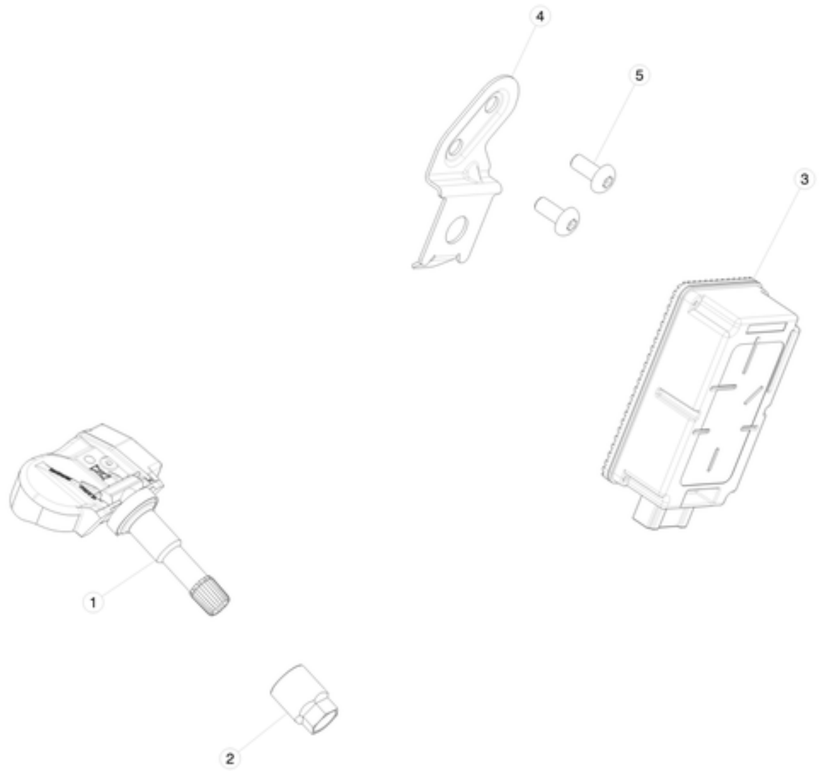

No	Part Name	Category	Part Description	Part Number	Qty	Comments
1	TIRE PRESSURE MONITORING SYSTEM SENSOR 433 MHz - CONTINENTAL - SILVER - NORTH AMERICA AND EUROPE	Unrestricted	TIRE PRESSURE MONITORING SYSTEM SENSOR 433 MHz - CONTINENTAL - SILVER - NORTH AMERICA AND EUROPE	1034602-00-B	4	
2	CONTI TPMS, NUT, SILVER	Unrestricted	TIRE PRESSURE MONITORING SYSTEM SENSOR NUT - SILVER - CONTINENTAL	1038973-00-A	4	Order in quantities of 50; minimum order: 50.
2	TPMS SENSOR NUT - BLACK - BAOLONG	Unrestricted	TIRE PRESSURE MONITORING SYSTEM SENSOR NUT - BLACK - BAOLONG	1047852-00-A	4	Use with any brand of TPMS sensor. Order in quantities of 50; minimum order: 50.
3	TPMS CONTI ECU RECEIVER 433 MHz NA/EU	Unrestricted	TIRE PRESSURE MONITORING SYSTEM ELECTRONIC CONTROL UNIT RECEIVER RECEIVER 433 MHz - CONTINENTAL - NORTH AMERICA AND EUROPE w/Bootloader WITH CAN Choke	1034601-00-C	1	1034601-00-C can replace 1034601-00-B
4	TPMS CONTI BRACKET	Unrestricted	TIRE PRESSURE MONITORING SYSTEM BRACKET - CONTINENTAL	1035328-00-C	1	
5	SCREW TORX M5 x 12 TRUSS HEAD (T25)	Unrestricted	TRUSS HEAD SCREW M5X12 WITH T25 TORX DRIVE	1011784-00-A	6	
*	TPMS,DUAL EXT ANTENNA,PROXIMITY COUPLED	Unrestricted	PROXIMITY COUPLED TIRE PRESSURE MONITORING SYSTEM DUAL EXTERNAL ANTENNA	1028127-00-B	1	
*	DUAL LOCK 250 25 x 25	Unrestricted	DUAL LOCK 25MM x 25MM	1006396-00-A	1	

TIRES

Tires

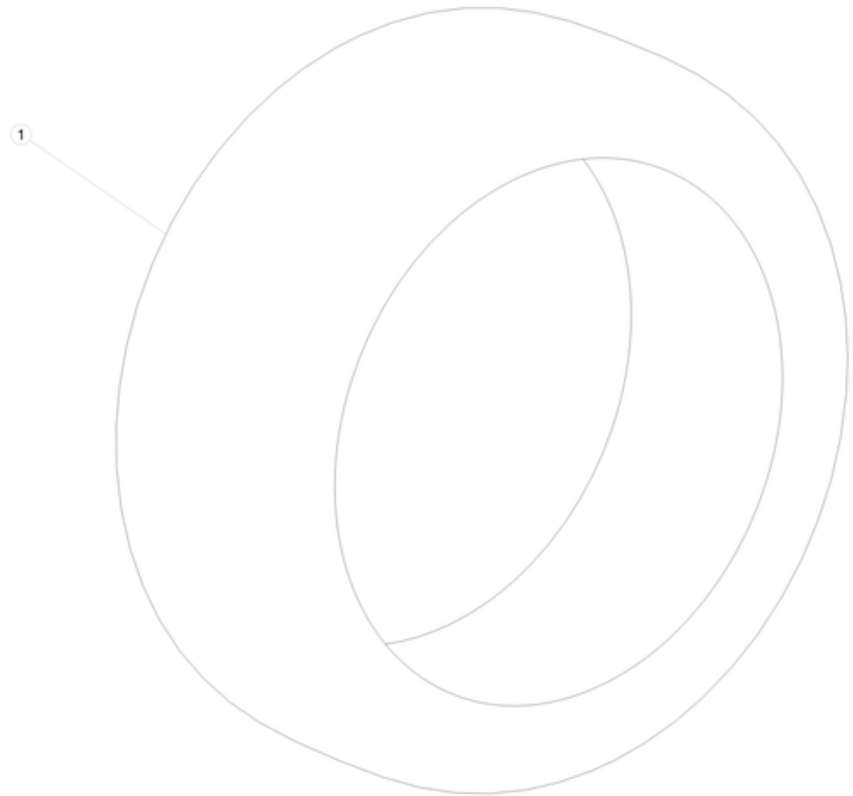

No	Part Name	Category	Part Description	Part Number	Qty	Comments
1	TIRE, 245/45R19 98W GY EAGLE TOURING	Unrestricted	GOODYEAR EAGLE 98W TIRE - P245/45R19	6005890-00-C	4	For U.S and Canada. Option code: TIG4. For 60, 60D, 70, 70D, 75, 75D, 90D, 100D vehicles. Must replace with -C, do not use -A or -B.
1	TIRE-P245/45R19 102Y MICHELIN PRIMACY 3	Unrestricted	MICHELIN PRIMACY 3 - P245/45R19	1067803-00-B	4	Option code: TIP3. For 60, 60D, 70, 70D, 75, 75D, 90D, 100D vehicles in Mexico, Europe, Asia Pacific. OK to use production part number 1062713-00-C.
1	TIRE, P245/35R21 CONTINENTAL SPORT CONTACT 5P T0 CONTISILENT	Unrestricted	CONTINENTAL SPORT CONTACT 5P TIRE - P245/35R21	1053501-00-A	2	Option code: TIC6. Front tires for 60, 60D, 70, 70D, 75, 75D, 90D vehicles.
1	TIRE, P265/35R21 CONTINENTAL SPORT CONTACT 5P T0 CONTISILENT	Unrestricted	CONTINENTAL SPORT CONTACT 5P TIRE - P265/35R21	1053502-00-A	2	Option code: TIC6. Rear tires for 60, 60D, 70, 70D, 75, 75D, 90D vehicles.
1	TIRE - P245/45R19 MICHELIN PS3	Unrestricted	MICHELIN PS3 TIRE - P245/45R19	1065206-00-B	4	Option code: TIM3. For P90D and P100D vehicles. OK to use production part number 1033163-00-B.
1	MICHELIN PILOT SPORT PSS TIRE - 245/35R21	Unrestricted	MICHELIN PILOT SPORT PSS TIRE - 245/35R21	1079720-00-A	2	Option code: TIMS. Front tires for P90D and P100D vehicles. OK to use production part number 1019624-00-B.
1	MICHELIN PSS P265/35R21	Unrestricted	MICHELIN PSS P265/35R21	1079721-00-A	2	Rear tires for P90D and P100D vehicles. OK to use production part number 1019591-00-B.
1	TIRE - Studded - P245/45/19 Nokian Hakkapeliitta 8	Unrestricted	Nokian Hakkapeliitta 8 - STUDDED TIRE - P245/45/19	1049607-00-A	4	Canada only
1	PIRELLI WINTER SOTTOZERO 3 - 245/35/21	Unrestricted	PIRELLI WINTER SOTTOZERO 3 - 245/35/21	1050699-00-A	4	
1	Tire - Snow - 245/45/19 - Pirelli 240 Sottozero	Unrestricted	PIRELLI 240 SOTTOZERO SNOW TIRE - P245/45/19	1013809-01-A	4	
1	WINTER TIRE - 245/45R19 - MICHELIN X-ICE 3	Unrestricted	MICHELIN X-ICE 3 WINTER TIRE - P245/45R19	1060909-00-A	4	Canada only
*	TIRE INFLATION KIT	Unrestricted	TIRE INFLATION KIT WITH INTERNATIONAL STICKER	6005923-00-B	1	No longer available. Order 1133009-00-A instead
*	TIRE REPAIR KIT	Unrestricted	TIRE REPAIR KIT	1133009-00-A	1	

*	TIRE INFLATION KIT REPLACEMENT BOTTLE	Unrestricted	TIRE INFLATION KIT REPLACEMENT BOTTLE	1018166-00-A	1	
*	Snow chain SCC Z-Chain (Z-563) for the Model S	Unrestricted	SCC Z-CHAIN (Z-563) SNOW CHAIN	1016755-00-A	1	Not Illustrated
*	TIRE PATCH PLUG	Unrestricted	TIRE PATCH PLUG	1081308-00-A	1	
*	WHEEL WEIGHT, 75-3470-8505-4	Unrestricted	WHEEL WEIGHT, 75-3470-8505-4	1068155-00-A	1	

WHEELS

Wheels

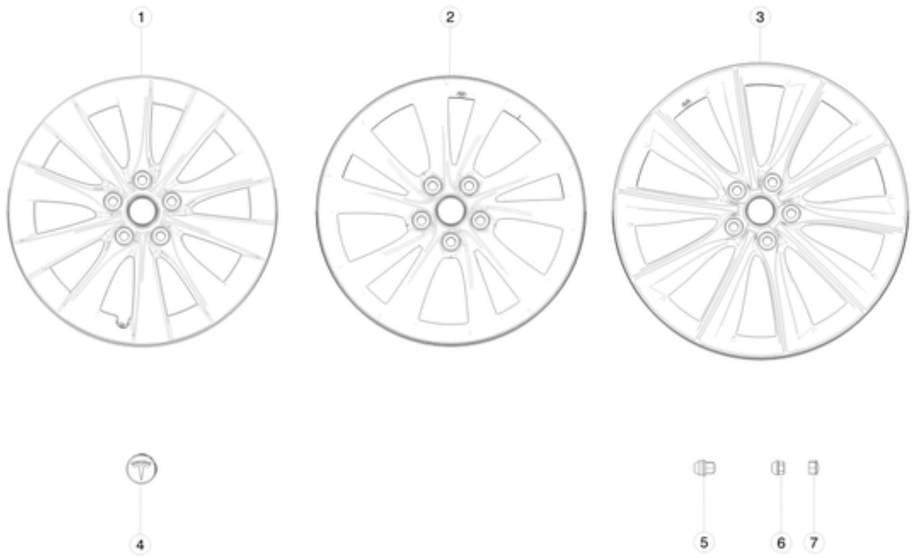

No	Part Name	Category	Part Description	Part Number	Qty	Comments
1	WHEEL - 19x8.0J ET40 AERO TURBINE	Unrestricted	SLIPSTREAM SILVER WHEEL - 19x8.0	1076891-00-A	4	Option code: WTAS.
2	WHEEL - 19x8.0J ET40 CYCLONE SILVER	Unrestricted	CYCLONE SILVER WHEEL - 19x8.0	1054045-00-A	4	Option code: WTTB. OK to use 1024183-00-A.
2	WHEEL - 19x8.0J ET40 AERO TURBINE, GREY	Unrestricted	Aeroturbine Slipstream Grey Wheel - 19x8.0	1076891-02-A	4	OK to use 1059337-02-A
3	WHEEL - 21X8.5J - SILVER	Unrestricted	TURBINE SILVER WHEEL - 21X8.5 - SILVER	1054041-00-A	4	Option code: WTSS. Ok to use 6005868-00-C or newer
3	WHEEL - 21X9.0J - SILVER - REAR	Unrestricted	TURBINE SILVER WHEEL - 21X9 - SILVER - REAR	1054043-00-B	2	Option code: WTSS. OK to use 1017337-00-B.
3	WHEEL - 21X8.5J - GREY - FRONT	Unrestricted	TURBINE GREY WHEEL - 21X8.5 - FRONT	1054042-00-A	2	Option code: WTSG. Ok to use 6005868-01-C or newer
3	WHEEL - 21X9.0J - GREY - REAR	Unrestricted	TURBINE GREY WHEEL - 21X9 - REAR	1054044-00-B	2	Option code: WTSG. OK to use 1017337-01-B.
3	SVC WHEEL, 21x8.5J,ET40, TWN TURB, SLVR	Unrestricted	SILVER TWIN TURBINE SERVICE WHEEL - 21X8.5 - FRONT	8008735-00-A	2	Option code: WTTS.
3	SVC WHEEL, 21x9.0J, ET40, TWN TURB, SLVR	Unrestricted	SILVER TWIN TURBINE SERVICE WHEEL - 21X8.5 - REAR	8008133-00-A	2	Option code: WTTS.
3	SVC WHEEL, 21x8.5J,ET40, TWN TURB, CRBN	Unrestricted	CARBON TWIN TURBINE SERVICE WHEEL - 21X8.5 - FRONT	8008735-01-A	2	Option code: WTTC.
3	SVC WHEEL, 21x9.0J, ET40, TWN TURB, CRBN	Unrestricted	CARBON TWIN TURBINE SERVICE WHEEL - 21X8.5 - REAR	8008133-01-A	2	Option code: WTTC.
4	WHEEL ORNAMENTATION CENTER - SILVER	Unrestricted	WHEEL CENTER CAP - SILVER	6005879-00-A	4	Option codes: WTAS, WTSS, WTTB.
4	WHEEL ORNAMENTATION CENTER CAP - GREY	Unrestricted	WHEEL CENTER CAP - GREY	6005879-01-A	4	Option code: WTSG. Order in quantities of 25; minimum order: 25.
5	LUG NUT CAP, TALL	Unrestricted	LUG NUT CAP, TALL	1027010-00-A	20	

5	LUG NUT CAP, TALL - CHROME - PC +ABS	Unrestricted	LUG NUT CAP, TALL - CHROME - PC+ABS	1027010-02-A	20	
6	LUG NUT COVER, BLACK	Unrestricted	LUG NUT COVER - BLACK	1023838-00-A	20	Order in quantities of 50; minimum order: 50.
6	LUG NUT CAP, MEDIUM, CHROME	Unrestricted	LUG NUT CAP, MEDIUM, CHROME	1027011-00-A	20	
6	LUG NUT CAP, MEDIUM, BLACK	Unrestricted	LUG NUT CAP, MEDIUM, BLACK	1027011-01-A	20	
7	NUT LUG M14x1.50 [10]-CHR	Unrestricted	LUG NUT - M14x1.50 - CHROME	2007065	20	
7	NUT LUG M14x1.5 PC10	Unrestricted	NUT LUG M14x1.5 PC10	1027002-00-B	20	